Addendum 1

Project: Lathrop Fire Station 31
Rehabilitation
Project No: 757-01-20
Date: 12/09/2020

From Architect: LDA Partners, Inc.
222 Central Court
Stockton, CA 95204

Phone: 209.943.0405
FAX: 209.943.0415
E-mail: ewohle@LDAPartners.com

This Addendum forms a part of the Contract Documents and modifies the original issued ***November 16, 2020*** as noted below. Acknowledge receipt of this addendum in submittal of bid.

RFI#1

- Question: Are you accepting bids for material testing and special inspections?
- Response: This item is not included in the bid proposal as requested. If the district finds itself needing your services we will certainly reach back out for a quote.

RFI#2

- Question: Could you let me know if there is any additional information you might need for the bifold doors, and as importantly, since I don't have access to the specs, would Jewers be considered a source of supply on this project so we can bid accordingly?
- Response: The fire district's internal team has evaluated its current maintained system of bifold doors and the existing set of plans. It was determined that the Basis of Design was to match the existing Door Engineering FF300 Glazed style of bifold door that is currently in some of the Fire District's facilities.

RFI#3

- Question: I would like to request a planholders or bidders list, and to confirm that the bid date and time are unchanged. You can send that via email, or fax to 800-768-5594. If any addenda have been recently released and you are able to attach them to this response that would be appreciated.
- Response: We have added your email projectdata@construction.com to the list of those to receive project notifications. However it is the Bidder's responsibility to confirm receipt of any notification.

RFI#4

- Question: If you could be so kind as to add us to all future projects and updates, specifically on this project, that would be appreciated.
- Response: Firms at the job walk will be added to a future projects distribution list.

RFI#5

- Question: I would like to bid the apparatus bay doors for your current project and I would like to see if I can help you use BATOR four fold doors as the basis of design.
- Response: Refer to RFI # 2

RFI#6

- Question: Please confirm that this project does not have prevailing wage requirements as there is no mention of prevailing wage in the bid documents received.
- Response: The project is a prevailing wage project.

RFI#7

- Question: Will there be a project manual with technical spec. distributed soon as I didn't see on lmfire website? Also please confirm the bid walk is still one next Monday 11/30/20 at 1:30 pm?
- Response: Yes, the document has been uploaded to the fire districts website: https://www.lmfire.org/administration/page/station-31-rehabilitation-project-ad18-02

RFI#8

- Question: Can you confirm the sizes of the apparatus bay doors? The drawings call for 12x12 doors but the field measurements of the doors are proving to be larger. Can you confirm the sizes?
- Response: Doors have been clarified on Addenda #1.

RFI#9

- Question: Will there be any changes to the existing door opening sizes?
- Response: There will be no changes to the existing opening sizes of the apparatus bay doors.

RFI#10

- Question: Is there a specification on the doors or a Basis of Design?
- Response: Refer to RFI # 2

RFI#11

- Question: We would like you to use this product as a basis of design.
- Response: Refer to RFI # 2

RFI#12

- Question: Please provide the tile manufacturer, size, and color that is required. If we need to match please provide a picture of the existing.
- Response: Refer to RFI # 2

RFI#13

- Question: I was wondering if you had any specifications for the roofing for this project?
- Response: All project documents are on the District's website.

RFI#14

- Question: GC Section 18 made no mention regarding builder's risk insurance, will the owner carry this insurance or bidders are required to purchase and include this in the bid?
- Response: Builder's Risk Insurance is required.

RFI#15

- Question: Please confirm the determined of low bidder is based on the Bid Cost Summary (Base Bid Amount + Alternates) of the Attachment D (Page 14 of 29)?
- Response: The Bid will be awarded based upon the lowest responsible bidder of the **Base Bid**.

RFI#16

- Question: Please provide description of works in regarding to add alternate no. 1 as there was no spec. section in relating to alternate descriptions.
- Response: See Clarifications below.

RFI#17

- Question: Per sheet A5.0, it calls out for single ply type roofing at the tower but yet on sheet A6.0 elevation, it calls out for metal panels roofing with pitch at the tower. Please clarify/confirm the type of roofing.
- Response: A5.00 indicates single ply roofing at the tower. A6.00 shows metal panels at the high part where (e) wood siding is being replaced.

RFI#18

- Question: Please provide specification for fixture type "F4"
- Response: Reference to F4 have been revised to read F3 on Sheet E5.0.

RFI#19

- Question: There are no Fire alarm panel, cable type, scope, manufacturer, specifications. Please advise
- Response: See attached Section 28 31 00 of the Project Manual

RFI#20

- Question: Can the Stiles door model for the hollow metal design be used and the Oregon door for the wood doors be used?
- Response: This is acceptable.

.

RFI#21

- Question: Please provide missing specs for Section 07 41 13 Metal Roof Panels and Section 07 54 19 Polyvinyl Chloride (PVC) Membrane.
- Response: Missing sections have been added to the Project Manual.

RFI#22

- Question: Can you email me a copy of the sign in sheet?
- Response: The sign in sheet is attached to this Addenda.

RFI#23

- Question: Are the same solar panels getting put back?
- Response: Yes, Refer to Bid Alternate below in clarifications.

RFI#24

- Question: I am looking to bid on the Lathrop Manteca Fire Station #31 project. I would bid on the flooring and the ceramic tile but I don't see any specs on either. Will there be specs for those items issued in an addendum?
- Response: There is no ceramic tile on the project. Refer to sheet A9.0 for updated finish schedule.

RFI#25

- Question: Who is responsible for moving equipment, furniture, and items designated for re-use?
- Response: Refer to clarification item #3 below.

RFI#26

- Question: The flooring and driveway are to be reconstructed. How will the fires station and it's fire trucks remain operational?
- Response: This is at the discretion of Means & Methods of Construction. The Fire Station Site must remain operational during constriction. The Contractor shall coordinate construction activities with the Fire District to ensure that the project moves forward while the Station remains operational. Apparatus will be housed else ware on site and Station staff will be housed in the adjacent buildings.

RFI#27

- Not Used

RFI#28

- Question: A new fire line will need to be tapped in from the street. The water main will be teed from the street to the riser. How will this be coordinated if the fire station is to be operational?
- Response: Refer to updated Civil Sheets.

RFI#29

- Question: Is Night work permitted? Should we plan on double shifts? Will this be a stop and go project? Will there be allowances or change order approval problems if this is the case? What scenario should the contractor bid?
- Response: This is at the discretion of Means & Methods of Construction. Typical construction hours are from 7am to 7pm, or as allowed or authorized by the City of Lathrop Municipal Code.

RFI#30

- Question: When the dorms, office, kitchen is under construction, what lay down area is designated for the contractor?
- Response: Refer to clarifications below

RFI#31

- Question: Will the contractor have to phase the construction?
- Response: This is at the discretion of Means & Methods of Construction. The Fire Station Site must remain operational during constriction. The Contractor shall coordinate construction activities with the Fire District to ensure that the project moves forward while the Station remains operational.

RFI#32

- Question: Have the fire alarm plans been approved?
- Response: No. Refer to Section 28 31 00 of the Project Manual.

RFI#33

- Question: Who is responsible for the encroachment permit? For that matter will the contractor be responsible for all building permits and procurement?
- Response: The Fire District will pull the Building Permit and pay its associated fees. The Contractor shall be responsible for any encroachment permits.

RFI#34

- Question: The brick cladding around the building requires scaffolding, extensive prep, and cure times. How does the district planning on addressing the adjacent driveways being open when construction activities are underway.
- Response: This is at the discretion of Means & Methods of Construction. The Fire Station Site must remain operational during constriction. The Contractor shall coordinate construction activities with the Fire District to ensure that the project moves forward while the Station remains operational.

RFI#35

- Question: In the cabling spec for approved manufacturer there are several manufacturers listed and also "approved equal" listed. We would like to see if we can install Belden Cable with Belden Connectivity and provide Belden's 25-year Structured Cabling Warranty?
- Response: This is acceptable.

RFI#36

- Question: The manual is missing the casework/counter specs, division 0640.
- Response: Section 06 40 23 has been added to the Project Manual.

Clarifications:

1. See below for Contractor lay down yard area.

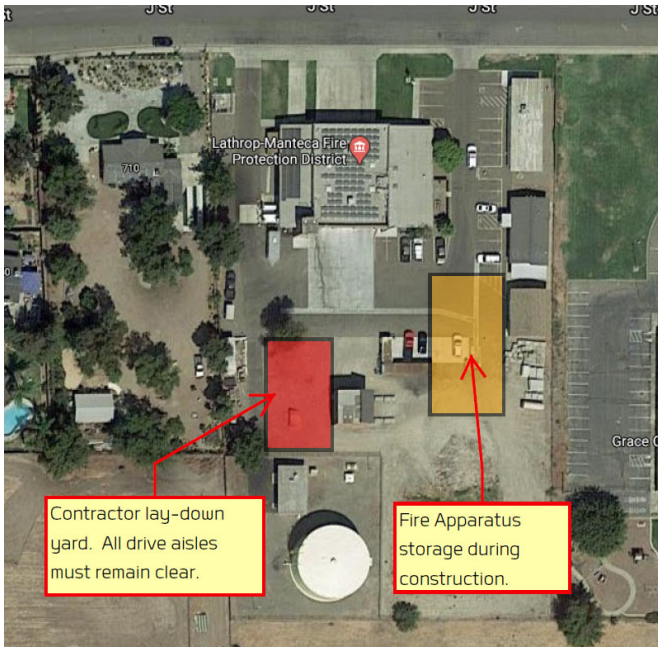

2. The Contractor shall be responsible for removing, protecting and reinstallation of the existing solar panels on the roof as part of the re-roofing as part of the Base Bid. **DEDUCTIVE BID ALTERNATE #1** shall encompass a price deduct for the District to perform removing, protecting and reinstallation of the existing solar panels.
3. The Contractor shall remove, protect, and reinstall the existing SCBA compressor in the apparatus bay. All other items shall be removed by the District prior to construction.
4. Contractors shall test concrete slabs for vapor emissions prior to installation of flooring finishes. For rubber, vinyl, or carpet flooring, when moisture vapor emissions are above tolerance for the specified adhesive,
5. Contractors shall furnish and install a moisture topical vapor barrier to the concrete slab prior to finish floor installation.
6. Contractor shall furnish and install two (2) Recessed Knox Box Model # 3275-RMK.
7. Contractor shall provide within the Base Bid, an allowance for the purchase and installation of 150, 10" high, mill finish cast aluminum letters with a ½" standoff. Wording and font to be determined by the Architect.
8. Section 09 30 00 – Ceramic Tile is removed from the project.
9. The District will Contract separately for the purchase and installation of the alerting system and security alarm system (Rays Radio and Bay Alarm). Conduits and pathways, and coordination are the responsibility of the General Contractor.
10. The District will Contract separately for the purchase and installation of the electronic access control devices (Bay Alarm). All manual hardware and accessories, conduits/ raceways, power, and coordination are the responsibility of the General Contractor. Refer to revised hardware schedule Sheet A9.01

11. Existing interior finish concrete shall be ground to a Grade 2 finish and Class 2 polish. Apply SCOFIELD Formula One Guard-W finish.

PROJECT PLANS:

1. Project Plan Sheets have been re-issued and additional mechanical, electrical compliance , and civil sheets have been added. These revisions also incorporate plan check comments (84 sheets total):

GENERAL:

G0.00	PROJECT DATA, GENERAL NOTES, SYMBOLS & ABBREVIATIONS
G1.00	CALGREEN CHECKLIST
G1.01	CALGREEN CHECKLIST
G1.02	CALGREEN CHECKLIST
62.00	LIFE SAFETY PLAN
G3.00	SIGNAGE DETAILS
G4.00	ACCESSIBILITY STANDARDS
G4.01	ACCESSIBILITY DETAILS

CIVIL:

C1.0	NOTES & SPECIFICATIONS
C2.0	CONSTRUCTION DETAILS
C3.0	TOPOGRAPHIC SURVEY
C4.0	PAVING PLAN
C5.0	GRADING PLAN
C6.0	UTILITY PLAN
C7.0	EROSION CONTROL PLAN

ARCHITECTURAL:

A1.00	SITE PLAN
A1.10	ENLARGED DEMOLITION SITE PLAN
A1.20	ENLARGED SITE PLAN
A1.30	GENERATOR ENCLOSURE PLAN & DETAILS
A2.00	EXISTING/DEMOLITION FLOOR PLAN
A2.01	EXISTING/DEMOLITION REFLECTED CEILING PLAN
A2.02	EXISTING ROOF DEMOLITION PLAN
A3.00	PROPOSED FLOOR PLAN
A4.00	PROPOSED REFLECTED CEILING PLAN
A5.00	ROOF PLAN
A6.00	EXTERIOR ELEVATIONS
A6.10	EXTERIOR ELEVATIONS
A7.00	BUILDING SECTIONS
A7.01	BUILDING SECTIONS
A7.10	WALL SECTIONS
A8.00	ENLARGED FLOOR PLAN
A8.01	INTERIOR ELEVATIONS
A8.02	INTERIOR ELEVATIONS
A9.00	ROOM FINISH SCHEDULE
A9.01	DOOR SCHEDULE
AD-01	DETAILS
AD-02	DETAILS
AD-03	DETAILS

STRUCTURAL:

S0.0	STRUCTURAL NOTES
S1.0	STRUCTURAL FLOOR PLAN
S2.0	FOUNDATION PLAN
S3.0	(N) CEILING FRAMING PLAN
S3.1	CEILING FRAMING DETAILS
S4.0	(E) ROOF FRAMING PLAN
S4.1	ROOF FRAMING DETAILS
S5.0	BUILDING SECTION C
S5.1	ROOF FRAMMING PLAN
S6.0	BUILDING SECTION D
S7.0	TOWER PLAN
S8.0	EXTERIOR SHOTCRETE REINF. WALL
S9.0	CMU WALL DETAILS

MECHANICAL:

M1.00	MECHANICAL-LEGEND, NOTES, AND SCHEDULES
M1.01	MECHANICAL-GREEN BUILDING CODE NOTES
M2.00	MECHANICAL-DEMOLITION FLOOR PLAN
M2.01	MECHANICAL-DEMOLITION ROOF PLAN
M3.00	MECHANICAL- FLOOR PLAN
M3.01	MECHANICAL-ROOF PLAN
M4.00	MECHANICAL-DETAILS
M4.01	MECHANICAL-DETAILS
M4.02	MECHANICAL-DETAILS
M5.00	VEHICAL EXHAUST
M5.01	VEHICAL EXHAUST
M5.02	VEHICAL EXHAUST
T24.01	ENERGY COMPLIANCE
T24.02	ENERGY COMPLIANCE
T24.03	ENERGY COMPLIANCE

PLUMBING:

P1.00	LEGEND, NOTES, AND SCHEDULES
P1.01	GREEN BUILDING CODE NOTES
P2.00	DEMOLITION FLOOR PLAN
P2.01	DEMOLITION ROOF PLAN
P3.00	FLOOR PLAN
P3.01	ROOF PLAN
P4.00	DETAILS

ELECTRICAL:

E0.1	GENERAL ELECTRICAL NOTES AND ABBREVIATIONS
E2.0	DEMOLITION-ELECTRICAL FLOOR PLAN
E3.0	PROPOSED POWER PLAN
E4.0	PROPOSED SIGNAL PLAN
E5.0	NEW LIGHTING PLAN
E5.1	LIGHTING SCHEDULE AND DETAILS
E6.0	EQUIPMENT POWER- ROOF PLAN
E7.0	PANEL SCHEDULE & SINGLE LINE DIAGRAM
E8.0	ELECTRICAL DETAILS
E9.1	ELECTRICAL COMPLIANCE
E9.2	ELECTRICAL COMPLIANCE

PROJECT SPECIFICATIONS:

1. Project Specification Sections are ADDED.

SECTION 03 37 13 - SHOTCRETE
SECTION 06 40 23 - INTERIOR ARCHITECTURAL WOODWORK
SECTION 07 41 13 - METAL ROOF PANELS
SECTION 08 12 16 - INTERIOR ALUMINUM FRAMES
SECTION 08 33 00 - FOUR- FOLD DOOR SYSTEMS
SECTION 08 33 23 - OVERHEAD COILING DOORS
SECTION 08 41 10 - ALUMINUM-FRAMED ENTRANCES AND STOREFRONTS
SECTION 09 67 23 - RESINOUS FLOORING & WALL SURFACES
SECTION 09 68 00 - CARPET
SECTION 09 77 20 - FRP
SECTION 10 50 30 - TURNOUT GEAR LOCKERS
SECTION 21 13 13 – WET PIPE SPRINKLER SYSTEMS
SECTION 28 31 00 – FIRE ALARM SYSTEM

2. Project Specification Sections are REVISED.

Section 09 51 23 – Acoustical Panel Ceiling
Revise Section as following:

2.02 MINERAL-BASE ACOUSTICAL PANELS FOR ACOUSTICAL PANEL CEILING.
A. Products:
1. color – white. Ultima 1945, 24x24

2.04 METAL SUSPENSION SYSTEM FOR ACOUSTICAL PANEL CEILING.
A. Products:
1. Panel Type A: Armstrong, 9/16" Ultima, color – white, or equal

End of Addendum

F.S. #31 REHABILITATION PROJECT MTG

11.30.20

NAME	COMPANY	PHONE / EMAIL
ERIC WOHLE	LDA	943.0405 EWOHLE@LDAPARTNERS.com
STEVE HAY	DLC	2094561185 STEVE@DOLANLOYCO.COM
Kevin Lewis	National Garage Door	916 638-4554 klewis@nationalgaragedoor
TOHEEDASGHAR	SABOO INC	626-260 2849 TASGHAR@SBCGLOBAL.NET
Ron Barber III	RB Environmental	209-740-8205 rb3@rbenvironmentalinc.com
Rick Aguilar	Simile Const.	209-545-6611 ESTIMATING@SIMILECONST.C
Victor Garrido	ALLIANCE CONTRACTING	916-647-2173 VICTOR@ALLIANCE-CONTRACTING
MIGUEL ZAMORA	BZ CONSTRUCTION	209.531.1252 MZAMORA@BZCONST.COM
MIKE SCHINKEL	Concrete Resurfacing Systems	916-859-0001 estimator@concresys.com
michael MASON	Diede const. INC	209-369-825 estimating@diedeconstruction.com
LOUIE TOVAR	COASTWIDE. ENV.	(559) 351-4938 LOUIE@COASTWIDE.NET
Hudh Truong	DL Falk Inc	(510) 887-6500 HTruong@dlfalk.com
Steve Johnson	JHK const	209-838-2970 JHKCONS@velociter.net
Juan Perez	IBEW	(209) 917-6141 jperez@ibew595.org
Georgina Hralautra	IBEW	209.414.8928 GHalautra@ibew595.org
GabeDelaRiva	Schweiger plumbing	209-840-2824 GabedlspI2@yahoo.com
Steve Schweiger	"	209-814
Tim SIVETS	CNW INC	(209) 466-5891 Tim@CNWCONSTRUC
JAMES ALTHOUSE	ALLIANCE CONTRACTING SERVICES	209-743-2052 james@alliance-contractingsvc.com

SECTION 03 37 13 SHOTCRETE

PART 1 - GENERAL

1.01 DESCRIPTION

A. This Section describes the requirements for furnishing and installing shotcrete at existing shear walls specified on the project drawings.

B. Work Included:

1. Preparing surfaces to receive shotcrete.

2. Furnishing and placing forms and ground wires.

3. Mixing, delivering, placing, finishing and curing of shotcrete.

1.02 RELATED WORK

A. Cast-In-Place Concrete: Section 03 30 00.

B. Concrete Reinforcement: Section 03 20 00.

1.03 REFERENCES:

A. American Concrete Institute (ACI) Reference Standards, current edition

1. 305 Hot Weather Concreting

2. 306: Cold Weather Concreting.

3. 318: Building Code Requirements for Reinforced Concrete.

4. 5W. -Guide to Shotcrete Specification for Materials, Proportioning and Application of Shotcrete.

B. American Society for Testing and Materials (ASTM), current edition:

1. A615: Specification for Deformed and Plain Billet-Steel Bars for Concrete Reinforcement.

2. C33: Standard Specification for Concrete Aggregates.

3. C39: Standard Test Method for Compressive Strength of Cylindrical Concrete Specimens.

4. C42: Standard Method of Obtaining and Testing Drilled Cores and Sawed Beams of Concrete.

5. C94: Standard Specification for Ready-Mixed Concrete.

6. C150: Standard Specification for Portland Cement.

7. C260: Standard Specification for Air-Entraining Admixtures for Concrete

8. C309: Standard Specification for Liquid Membrane-Forming Compounds for Curing Concrete.C494 Standard Specification for Chemical Admixtures for Concrete.

9. C618: Standard Specification for Coal Fly Ash and Raw or Calcined Natural Pozzolan for use as a Mineral Admixture in Portland Cement Concrete.

1.04 QUALITY CONTROL

A. Conform use of shotcrete to the following:

1. Limitation on Use:

a. Do not place shotcrete where the stream from the nozzle cannot directly impinge on the surface on which the concrete is to be placed.

b. Where placing condition precludes the possibility of obtaining cores from the structure, this method shall not be used.

2. Reinforcement:

a. Use small bar sizes with #5 bars as the normal maximum size.

b. Where structural design requires bars larger than #5 size, space at minimum of six bar diameters between all reinforcing bars and place splicers so that a line through the center of the two spliced bars is perpendicular to the surface of the wet mix shotcrete installation.

c. Do not exceed #8 bar size except where indicated.

d. Where size of the reinforcing exceeds #5 bars, only a qualified person on the shotcrete nozzle with a minimum of 3 years of structural wet mix shotcrete experience and having written documentation of that experience shall apply structural wet mix shotcrete.

3. Columns: Do not apply shotcrete to any tied spiral columns. Shotcrete may only be applied to tied columns where spacing of the reinforcing steel is the same as for walls.

4. Walls: Where shotcrete is to be applied to walls, minimum spacing of the reinforcing steel shall be six bar diameters for walls with one curtain of steel. Where two curtains of steel are provided, the curtain nearest the nozzle shall have a minimum spacing of 12 bar diameters and the remaining curtain shall have a minimum of spacing of six bar diameters, the reinforcing steel shall have minimum spacing of three bar diameters at splices. In all cases, minimum clear distance between reinforcing bars (other than mesh) shall be 2-1/2".

a. Exception: Contact splices shall not be made in bars larger than #5 size. Instead, splices shall be non-contact and back-to-back lap with bars placed and aligned as specified above under Subparagraph

"Reinforcement"

5. Continuous inspection is required for all shotcrete.

6. Code:

   a. All other requirements for inspection and concrete of the applicable Standards of ACI 506 shall be followed. Shotcrete Applicators shall have a copy of the latest edition of ACI 506 on each work site at the time of shotcreting. Substitute the word "shall" whenever the word "should" occurs in ACI 506.

   b. The concrete mix shall not be batched volumetrically.

   c. Test consisting of not less than 2 cylinders at 28 days is required.

B. Qualified Persons:

1. Shotcrete supervisor and nozzle person shall furnish a resume for approval by Engineer prior to placing.

2. Shotcrete Subcontractor who will place the shotcrete:

   a. Have at least 5 years' experience in structural shotcrete construction and have constructed at least 10 significant structural shotcrete installations (other than swimming pools) which, on investigation, have been found to be completed in a satisfactory manner, furnish a written resume of that experience and a list of locations of previous jobs.

   b. Employ only skilled nozzle persons, nozzle person helpers, and rod persons, each having not less than 3 years of structural shotcrete placing experience and furnish satisfactory written evidence of such experience upon request.

   c. When the Engineer approves the resume of the nozzle person, the shotcrete supervisor, the Shotcrete Subcontractor, and any member of the three persons no longer occupy the position on the approved team, a new resume shall be submitted.

C. Preconstruction Testing:

1. Test panels:

   a. Shooting and Examination: At the job site, each team of the person at the nozzle and helper shall shoot a test panel (minimum 4 feet by 4 feet) of the thickness and with the typical reinforcing steel pattern, using each shooting position anticipated on the job before commencing any shotcreting work on the building.

   b. The Inspector shall witness the assembly, reinforcing, shooting, and disassembly of the test.

c. After shooting, but before concrete has fully set, disassemble the test panel, to reveal if team and equipment to be used is capable of providing sound concrete behind reinforcing steel. Test panel shall be free of voids, sags, etc do not proceed with application of shotcrete in finished work until test panel has been shot, disassembled, inspected and approved by the Owner's Representative.

d. Special Test Panels: Special test panels as specified above are required for shotcrete to contain reinforcing bars larger than #8 size.

2. Core Tests

   a. Cut 4" or larger diameter cores from the full depth of wall, with minimum of one core for each 1,000 square feet of wall and a minimum of two cores for each day's application by any one-nozzle team. Each core must be free of voids and rebound,

   b. Core locations shall be as approved by the Owner's Representative.

   c. Cut all cores within two to five calendar days of shotcrete placement, have cores visually inspected at the job site by the Owner's Representative, and then replace into the hole from which the core was cut. Seal the surface at each core to prevent hydration and mark location to aid in identification of the core for testing at a 28-day age. The cores shall be tested in accordance with ASTM C42, and in the condition they were in when removed from the wall with no further curing allowed.

3. Joints

   a. Provide cold joints, including slope of joints as shown on the Drawings.

   b. When shooting up to underside of existing concrete, dry pack the last two inches or use an approved method of dry shotcrete.

   c. If the joint detail is sloped so closure of the cold joint made with shotcrete does not sag away from the upper surface, and if both sides of the cold joint have taken initial set, the joint closure may be made with shotcrete

4. Reinforcement: Securely tie reinforcing steel in place so that any movement shotcreting is not possible,

5. Placing Height: The height of each shotcrete layer shall be limited to six feet. Do not place a succeeding layer in less than two hours. No sloughing or sagging will be permitted.

6. Slump: Measure at point of discharge from the mixer, except the Owner's Representative may require slump tests at the discharge point where water may have been added Slump shall be 1-1/2" minimum and 2-1/2" maximum.

7. Rebound: Have a capable nozzle person's helper equipped with an air blow pipe to assist the nozzle person in keeping all rebound build-up out of the Work. If the rebound cannot be removed by the air blow pipe, provide additional workers to remove rebound from the Work.

8. Obstructions: Do not place keyways or embedments in front face that will interfere with the stream from the nozzle.

D. Structural Wet Mix Shotcrete Design:

1. The Testing Laboratory California registered Civil Engineer shall design and stamp the shotcrete mix, including recommendation for minimum time between shotcrete lifts.

2. Minimum 28-compressive strength of shotcrete shall be the same as shown or specified for cast-in- place concrete in the same location. The trial batch strength for the shotcrete mix shall exceed the required 28-day compressive strength by750 psi or a lesser amount based on standard deviations of strength test records according to ACI 318.

3. The Contractor shall bear costs for shotcrete mix design and related testing.

4. Do not change the mix proportions established by accepted mix designs without prior written approval.

5. If any shotcrete mix develops less than the required minimum 28-day compressive strength, adjust the mix proportions and increase the amount of cement as necessary, at no extra cost to the Owner.

6. Do not exceed the predetermined amount of mix water because of slowness of discharge from the mixer or for any other reason, but reduce water to minimum necessary to produce shotcrete that will shoot readily into corners and angles of forms and around reinforcements, without segregation of materials and without free water collecting on the surface.

1.05 ENVIRONMENTAL REQUIREMENTS

A. Air and substrate temperature must be maintained at 40 degrees F. or higher during shotcreting and for a minimum of 7 calendar days following shotcreting. If heating and weather protection is required, use means acceptable to the Owner’s Representative.

B. Maintain shotcrete mixture at 55 degrees F or higher.

C. Do not place shotcrete on any frozen or spongy substrate, or where there is freestanding water.

1.06 SUBMITTALS

A. Written documentation of Applicator's work experience.

B. Certification by manufacturers of materials used in shotcreting process that requirements of this Section are met.

C. Listing of proposed mix design, materials and equipment proposed for work of this Section.

PART 2 - PRODUCTS

2.01 MATERIALS

A. Structural Shotcrete:

1. Portland Cement: Meet requirements of ASTM C1 50, Type II, low alkali.

2. Fine aggregate: Washed hard dense durable sharp sand, from an approved source, free of organic matter, containing not more than 2% by weight of deleterious substances and meeting requirements of ACI 506, Gradation No. 1 or No. 2, and ASTM C33.

3. Coarse aggregate:

   a. Meet requirements of A STMC33.

   b. From an approved source and free of vegetable matter, opaline, feldspar, or any siliceous magnesium substances

   c. Clean and hard fine-grained sound gravel or crushed stone containing maximum of 0.5% by weight of clay, shale, mica, coal, or other lightweight material, and a maximum of 5% by weight of flat, thin, elongated, friable or laminated pieces, if one dimension exceeds 2- 1/2 times its average thickness, consider such pieces as flat or elongated.

   d. Furnish coarse aggregates in two gradations, measured and introduced into mix separately.

4. Pozzolanic materials Meet requirements of ASTM C618, Class F, except loss of ignition shall not exceed three percent.

5. Water. Potable and from a domestic source.

B. Reinforcing steel: Conform to Section 03200, except as modified in this Section.

C. Epoxy crack repair system: Sika Chemical "Sikadur 31 Hi-Mod" with "Sika Injection-29", Symons “ResCon 306 HM HV” with “ResCon 302 HM-LV”, or equal, for sealing all cracks. Include conventional pipe nipples, Zerk, Alemite, or equal fittings, or polyethylene 1-way valves, as recommended by the epoxy system manufacturer.

D. Admixtures:

1. Shotcrete accelerator shall be available on the job with proper dispensing equipment at all times and shall meet the requirements of ACI 506 and the following:

   a. Test for compatibility in shotcreted test panels.

   b. Contain no intentionally added chloride ions.

   c. Not cause or promote corrosion of imbedded rebar or wire mesh.

2. Water-reducers, super-plasticisers and retarders:

   a. Meet requirements of ASTM C494,

b. Shall contain no intentionally added chlorideions.

3. Air entraining admixtures

a. Meet or exceed requirements of ASTM C260.

4. Membrane-forming curing compounds:

a. Meet or exceed requirements of ASTM C309.

PART 3 - EXECUTION

3.01 PREPARATION

A. Thoroughly clean and roughen concrete surfaces to receive shotcrete by sandblasting or by mechanical roughening as indicated on Drawings.

B. Remove all loose and deteriorated concrete.

1. Extend removal minimum of 6" on all sides of apparent deteriorated area.

2. If rebar is deteriorated or poor quality concrete extends above mid point of steel, extend removal of concrete at least 1-1/2" behind steel to allow access for full encasement of rebar.

C. Remove all rust from exposed reinforcing steel.

1. If 20% or more of diameter of steel has deteriorated, report condition to the Owner's Representative before encasing steel.

D. Leave no square shoulders on perimeter of repair cavity. Taper all edges

E. All surfaces to be shotcreted must be free of dust, loose particles oil or other deleterious materials that would prevent bond.

F. Just prior to shotcreting, dampen affected area lightly with potable water or a combination of air and potable water.

3.02 FORMS

A. Erect rigid forms of plywood, steel, or other materials specified on Drawings, that produce smooth plane surfaces built to permit escape of air and rebound. Leave the forms open on two sides where possible, open corners formed with a wire ground to which the two open sides are rodded. Other methods of producing the same result may be used if approved.

3.03 DEPTH GUIDES

A. Set depth guides for use as screeds to set the thicknesses, surface planes, and form of shotcrete. Place the ground wires tight and true to line and in such a manner that they are easily tightened.

3.04 EMBEDDED ITEMS

A. Coordinate with work of other Sections to be sure that all items to be embedded in shotcrete are installed, properly located, and rigidly secured in place.

3.05 PROTECTION

A. Protect adjacent surfaces not to receive shotcrete with waterproof paper or other adequate means from damage during shotcreting operations, and repair all damage as approved, at no extra cost to the Owner.

3.06 PLACEMENT OF SHOTCRETE

A. Conform to requirements of ACI 506.

1. Dispense shotcrete in steady uninterrupted flow.

2. Completely encase reinforcing steel with no voids or trapped rebound.

3. Remove and replace any areas exhibiting sagging without disrupting adjacent sound material.

3.07 REBOUND: Shall not be used in the work. Remove from site.

3.08 PUDDLED SHOTCRETE

A. Use of "puddled shotcrete" in which the water content is increased to facilitate placing in difficult locations is not allowed.

B. Do not place shotcrete where the material stream cannot impinge directly onto the involved surfaces.

C For difficult shooting conditions obtain the proper results by maintaining correct air pressure and water- cement ratio and reduce supply of material.

3.09 CONSTRUCTION JOINTS

A. Form joints with sloped, beveled edges. Clean and dampen hardened joint surfaces before placing additional material.

3.10 FINISHING

A. Leave areas underneath structure and not visible with natural gun finish.

B. Exposed areas Finish as required by the Owner’s Representative.

3.11 CURING

A. Clear, non-staining curing compound conforming to ASTM C309 may be used on surfaces not to receive additional finish,

B For areas to receive additional layers of shotcrete or to be finished. Use curing compound that will not retard bonding.

C. For areas to receive additional finish keep installed and float finished shotcrete continuously damp for not less than 7 days.

3.12 CRACK REPAIR

A. Repair cracks more than 1/16" wide in shotcrete, or between shotcrete and concrete.
   1. Cut cracks out 6 inches, slope bevel and dampen the cut edges.

   2. Repair with new shotcrete cured and finished to match adjoining surfaces

   3. In lieu thereof, cracks may be repaired with epoxy pressure grouting system using epoxy crack sealer, nipples and pressure epoxy injection. Conform to epoxy system manufacturer's instructions.

   4. Remove nipples and fittings, and fill holes with epoxy.

   5. Finish repairs flush with adjoining surface

   6. Delay crack repair as long as possible and perform just prior to final completion of the work.

3.13 FIELD QUALITY CONTROL

A. Inspection: Construct structural shotcrete under continuous inspection of Inspectors according to requirements stated in this Section. Obtain inspection and approval of forms and reinforcing by the Owner’s Representative prior to placing shotcrete.

B. Compressive Strength Tests:

   1. Test Cylinders in accordance with ASTM C39.

      a. The testing laboratory will prepare and test at least 2 cylinders for each day's placing performed by each nozzle person

      b. Date cylinders and record the name of the nozzle person shooting the cylinder and the parts of the structure represented by the cylinder

      c. Test one cylinder at 14-days age and one cylinder at 28 days age.

   2. Required compressive strengths:

      a. Minimum 75% of required strength for 14-day cylinder

      b. Full required strength for 28-day cylinder.

3. Mix Adjustment: If the 14-day cylinders develop less than the above required compressive strength, adjust mix proportions by increasing quantity of Portland cement while maintaining same water- cement ratio and same slump so resulting shotcrete meets requirements at no extra cost to the Owner. Determine full compressive strengths by specified core tests.

C. Core Tests:

1. Testing laboratory shall take and test cores as specified in this Section.

2. Core test compressive strengths shall meet the specified strength requirements

3. If any core shows deficient strength, additional cores shall be taken and tested at the Contractor's expense from the adjoining areas as directed. Two additional cores are required for each deficient core. If any additional test core proves deficient, the Contractor shall remove and replace deficient shotcrete as approved, at no extra cost to the Owner.

4. Should deficiency be evident in any of the 14-day cylinders, the Contractor may proceed with the work on his responsibility and risk until the 28-day cores are tested and found to be adequate.

D. Defective work: Cut out and replace all defective shotcrete, including rebound, sand pockets, sags, sloughing, and other defects, at no extra cost to the Owner.

3.14 CLEANUP

A. Keep premises reasonably free of all debris and waste materials resulting from the work remove from site at end of each day.

END OF
SECTION

SECTION 06 40 23 - INTERIOR ARCHITECTURAL WOODWORK

PART 1 - GENERAL

1.01 RELATED DOCUMENTS

A Drawings and general provisions of the Contract, including General and Supplementary Conditions and Division 1 Specification Sections, apply to this Section.

1.02 SUMMARY

A This Section includes the following:
1. Plastic-laminate and laminate metal cabinets.
2. Plastic-laminate and laminate metal countertops.
3. Solid Surface Countertops

B Related Sections include the following:
1. Division 9 Section "Gypsum Board Assemblies".

1.03 DEFINITIONS

A Interior architectural woodwork includes wood furring, blocking, shims, and hanging strips for installing woodwork items, unless concealed within other construction before woodwork installation.

1.04 SUBMITTALS

A Shop Drawings: Show location of each item, dimensioned plans and elevations, large-scale details, attachment devices, and other components.
1. Show locations and sizes of furring, blocking, and hanging strips, including concealed blocking and reinforcement specified in other Sections.
2. Show locations and sizes of cutouts and holes for plumbing fixtures, faucets, and other items installed in architectural woodwork.
3. Apply WI-certified compliance label to first page of Shop Drawings.

B Product Certificates: Signed by manufacturers of woodwork certifying that products furnished comply with requirements.

C Qualification Data: For firms and persons specified in "Quality Assurance" Article to demonstrate their capabilities and experience. Include lists of completed projects with project names and addresses, names and addresses of architects and owners, and other information specified.

D Provide warranty in accordance with the warranty and/or guarantee requirements stated elsewhere in Contract Documents including, but not limited to, Part III: Contract Documents Contract, Part IV: General Conditions, and Division 1 of technical specifications.

1.05 QUALITY ASSURANCE

A Installer Qualifications: An experienced installer who has completed architectural woodwork similar in material, design, and extent to that indicated for this Project, with a minimum of 3 years' experience, and whose Work has resulted in construction with a record of successful in-service performance.

B Fabricator Qualifications: A firm experienced in producing architectural woodwork similar to that indicated for this Project and with a record of successful in-service performance, as well as sufficient production capacity to produce required units.

C Source Limitations: Engage a qualified woodworking firm to assume undivided responsibility for production and installation of interior architectural woodwork.

D Quality Standard: Unless otherwise indicated, comply with WI's "Manual of Millwork" for grades of interior architectural woodwork, construction, finishes, and other requirements.

E Fire-Test-Response Characteristics: Where fire-retardant materials or products are indicated, provide materials and products with specified fire-test-response characteristics as determined by testing identical products per test method indicated by UL, ITS, or another testing and inspecting agency acceptable to authorities having jurisdiction. Identify with appropriate markings of applicable testing and inspecting agency in the form of separable paper label or, where required by authorities having jurisdiction, imprint on surfaces of materials that will be concealed from view after installation.

1.06 DELIVERY, STORAGE, AND HANDLING

A Do not deliver woodwork until painting and similar operations that could damage woodwork have been completed in installation areas. If woodwork must be stored in other than installation areas, store only in areas where environmental conditions comply with requirements specified in "Project Conditions" Article.

1.07 PROJECT CONDITIONS

A Environmental Limitations: Do not deliver or install woodwork until building is enclosed, wet work is complete, and HVAC system is operating and maintaining temperature and relative humidity at occupancy levels during the remainder of the construction period.

B Environmental Limitations: Do not deliver or install woodwork until building is enclosed, wet work is complete, and HVAC system is operating and will maintaining temperature between 60 and 90 deg F (16 and 32 deg C) and relative humidity between 43 and 70 percent during the remainder of the construction period.

C Field Measurements: Where woodwork is indicated to fit to other construction, verify dimensions of other construction by field measurements before fabrication and indicate measurements on Shop Drawings. Coordinate fabrication schedule with construction progress to avoid delaying the Work.

1. Locate concealed framing, blocking, and reinforcements that support woodwork by field measurements before being enclosed and indicate measurements on Shop Drawings.
2. Established Dimensions: Where field measurements cannot be made without delaying the Work, establish dimensions and proceed with fabricating woodwork without field measurements. Provide allowance for trimming at site, and coordinate construction to ensure that actual dimensions correspond to established dimensions.

1.08 COORDINATION

A Coordinate sizes and locations of framing, blocking, furring, reinforcements, and other related units of Work specified in other Sections to ensure that interior architectural woodwork can be supported and installed as indicated.

PART 2 - PRODUCTS

2.01 MATERIALS

A General: Provide materials that comply with requirements of the WIC quality standard for each type of woodwork and quality grade specified, unless otherwise indicated.

B Thermoset Decorative Overlay: Particleboard complying with ANSI A208.1, Grade M-2, or medium-density fiberboard complying with ANSI A208.2, Grade MD, with surface of thermally fused, melamine-impregnated decorative paper complying with LMA SAT-1.

C High-Pressure Decorative Laminate: NEMA LD 3, grades as indicated, or if not indicated, as required by woodwork quality standard. Patterns on laminate shall be run horizontally.
1. Manufacturer: UON, Architect shall choose high-pressure decorative laminate colors & patterns form any of the following manufacturers:
   a) Formica Corporation.
   b) Wilsonart International; Div. of Premark International, Inc.
   c) Nevarmar
   d) Pionite
   e) Or approved equal

D Adhesive for Bonding Plastic Laminate: Unpigmented contact cement.

E Adhesive for Bonding Plastic Laminate: PVA.

F Metal Laminate (where indicated):
1. Manufacturer: Moz Designs, Color and Finish as selected by Architect from Manufacturer's full range, or approved equal.

G. Solid Surface
1. Manufacturer: UON, Architect shall chose solid surface countertop colors & patterns form any of the following manufacturers:
   a) Formica Corporation.
   b) Wilsonart International; Div. of Premark International, Inc.
   c) Nevermar
   d) Pionite
   e) Avonite
   f) Or approved equal

2.02 FIRE-RETARDANT-TREATED MATERIALS

A General: Where indicated, use materials impregnated with fire-retardant chemical formulations indicated by a pressure process or other means acceptable to authorities having jurisdiction to produce products with fire-test-response characteristics specified.
1. Do not use treated material that does not comply with requirements of referenced woodworking standard or that is warped, discolored, or otherwise defective.
2. Use fire-retardant-treatment formulations that do not bleed through or otherwise adversely affect finishes. Do not use colorants in solution to distinguish treated material from untreated material.

B Fire-Retardant-Treated Lumber and Plywood by Pressure Process: Comply with AWPA C20 (lumber) and AWPA C27 (plywood), for woodwork items indicated as fire-retardant treated. Use the following treatment type:
1. Exterior Type: Organic-resin-based formulation thermally set in wood by kiln-drying.

2. Interior Type A: Low-hygroscopic formulation.

2.02 CABINET HARDWARE AND ACCESSORIES

A Hardware Standard: Comply with BHMA A156.9 for items indicated by referencing BHMA numbers or items referenced to this standard.

B Frameless Concealed Hinges (European Type): BHMA A156.9, B01602, 100 degrees of opening, self-closing.

C Wire Pulls: Back mounted, 4 inches (100 mm) long, 5/16 inches (8 mm) in diameter.

D Adjustable Shelf Standards and Supports: BHMA A156.9, B04071; with shelf rests, B04081.

E Drawer Slides: Accuride, or approved equal, Side-mounted, full-extension, zinc-plated steel drawer slides with steel ball bearings, BHMA A156.9, B05091, and rated for the following loads:
1. Box Drawer Slides: 75 lbf (330 N).
2. File Drawer Slides: 150 lbf (670 N).
3. Pencil Drawer Slides: 45 lbf (200 N).
4. Keyboard Slide: 75 lbf (330 N).

F Drawer Locks: BHMA A156.11, E07041. Provide allowance for 15 drawer locks.

G Grommets for Cable Passage through Countertops: 1-1/4-inch (32-mm) OD, black, molded-plastic grommets and matching plastic caps with slot for wire passage.
1. Product: Subject to compliance with requirements, provide "OG series" by Doug Mockett and Co., Inc., or approved equal.

H Exposed Hardware Finishes: For exposed hardware, provide finish that complies with BHMA A156.18 for BHMA finish number indicated.
1. Satin Chromium Plated: BHMA 626 for brass or bronze base; BHMA 652 for steel base.
2. Satin Stainless Steel: BHMA 630.

I For concealed hardware, provide manufacturer's standard finish that complies with product class requirements in BHMA A156.9.

J Aluminum reveals – ¾” typ, UON.

2.04 INSTALLATION MATERIALS

A Furring, Blocking, Shims, and Hanging Strips: Softwood or hardwood lumber, kiln-dried to less than 15 percent moisture content.

B Anchors: Select material, type, size, and finish required for each substrate for secure anchorage. Provide nonferrous-metal or hot-dip galvanized anchors and inserts on inside face of exterior walls and elsewhere as required for corrosion resistance. Provide toothed-steel or lead expansion sleeves for drilled-in-place anchors.

2.05 FABRICATION, GENERAL

A Interior Woodwork Grade: Provide Custom grade interior woodwork complying with the referenced quality standard.

B Wood Moisture Content: Comply with requirements of referenced quality standard for wood moisture content in relation to ambient relative humidity during fabrication and in installation areas.

C Fabricate woodwork to dimensions, profiles, and details indicated. Ease edges to radius indicated for the following:
1. Corners of Cabinets and Edges of Solid-Wood (Lumber) Members 3/4 Inch (19 mm) Thick or Less: 1/16 inch (1.5 mm).
2. Edges of Rails and Similar Members More Than 3/4 Inch (19 mm) Thick: 1/8 inch (3 mm).
3. Corners of Cabinets and Edges of Solid-Wood (Lumber) Members and Rails: 1/16 inch (1.5 mm).

D Complete fabrication, including assembly, finishing, and hardware application, to maximum extent possible, before shipment to Project site. Disassemble components only as necessary for shipment and installation. Where necessary for fitting at site, provide ample allowance for scribing, trimming, and fitting.
1. Notify Architect seven (7) calendar days in advance of the dates and times woodwork fabrication will be complete.
2. Trial fit assemblies at fabrication shop that cannot be shipped completely assembled. Install dowels, screws, bolted connectors, and other fastening devices that can be removed after trial fitting. Verify that various parts fit as intended and check measurements of assemblies against field measurements indicated on Shop Drawings before disassembling for shipment.

E Shop cut openings, to maximum extent possible, to receive hardware, appliances, plumbing fixtures, electrical work, and similar items. Locate openings accurately and use templates or roughing-in diagrams to produce accurately sized and shaped openings. Sand edges of cutouts to remove splinters and burrs.
1. Seal edges of openings in countertops with a coat of varnish.

2.06 PLASTIC-LAMINATE CABINETS

A Quality Standard: Comply with WI Section 15.

B WI Construction Style: Style A, Frameless.

C WI Construction Type: Type I, multiple self-supporting units rigidly joined together.

D WI Door and Drawer Front Style: Flush overlay.

E Reveal Dimension: 1/2 inch (13 mm).

F Laminate Cladding for Exposed Surfaces: High-pressure decorative laminate complying with the following requirements:
1. Horizontal Surfaces Other Than Tops: HGS.
2. Postformed Surfaces: HGP.
3. Vertical Surfaces: VGS.
4. Edges: HGS .
5. All patterns on laminate shall be run horizontally.

G Materials for Semiexposed Surfaces: Provide surface materials indicated below:
1. Surfaces Other Than Drawer Bodies: High-pressure decorative laminate, Grade VGS.
2. Drawer Sides and Backs: Thermoset decorative overlay.

3. Drawer Bottoms: Thermoset decorative overlay.

H Colors, Patterns, and Finishes: Provide materials and products that result in colors and textures of exposed laminate surfaces complying with the following requirements:
1. Match color, pattern, and finish as indicated by laminate manufacturer's designations for these characteristics.
2. Match Architect's sample.
3. Provide Architect's selections from laminate manufacturer's full range of colors and finishes in the following categories:
a) Solid colors.
b) Solid colors with core same color as surface.
c) Wood grains
d) Patterns.

I Provide dust panels of 1/4-inch (6.4-mm) plywood or tempered hardboard above compartments and drawers, unless located directly under tops.

2.07 PLASTIC-LAMINATE COUNTERTOPS

A Quality Standard: Comply with WI Section 16.

B High-Pressure Decorative Laminate Grade: HGS.

C Colors, Patterns, and Finishes: Provide materials and products that result in colors and textures of exposed laminate surfaces complying with the following requirements:
1. Match color, pattern, and finish as indicated by manufacturer's designations for these characteristics.
2. Match Architect's sample.
3. Provide Architect's selections from manufacturer's full range of colors and finishes in the following categories:
a) Solid colors.
b) Solid colors with core same color as surface.
c) Wood grains.
d) Patterns.

D Grain Direction: Parallel to cabinet fronts, uon.

E Edge Treatment: Same as laminate cladding on horizontal surfaces.

F Core Material: Particleboard or medium-density fiberboard.

G Core Material at Sinks: Particleboard made with exterior glue, medium-density fiberboard made with exterior glue, or exterior-grade plywood.

2.08 SOLID SURFACE COUNTERTOPS

A Quality Standard: Comply with WI Section 16.

B Solid Surface Material

C Colors, Patterns, and Finishes: Provide materials and products that result in colors and textures of exposed laminate surfaces complying with the following requirements:
1. Match color, pattern, and finish as indicated by manufacturer's designations for these characteristics.
2. Match Architect's sample.

3. Provide Architect's selections from manufacturer's full range of colors and finishes in the following categories:
   a) Solid colors.
   b) Solid colors with core same color as surface.
   c) Wood grains.
   d) Patterns.

D Grain Direction: Parallel to cabinet fronts, UON

E Edge Treatment: Same as laminate cladding on horizontal surfaces.

PART 3 - EXECUTION

3.01 PREPARATION

A Condition woodwork to average prevailing humidity conditions in installation areas before installation.

B Before installing architectural woodwork, examine shop-fabricated work for completion and complete work as required, including removal of packing and backpriming.

3.02 INSTALLATION

A Quality Standard: Install woodwork to comply with WI Section 26 for the same grade specified in Part 2 of this Section for type of woodwork involved.

B Install woodwork level, plumb, true, and straight. Shim as required with concealed shims. Install level and plumb (including tops) to a tolerance of 1/8 inch in 96 inches (3 mm in 2400 mm).

C Scribe and cut woodwork to fit adjoining work, and refinish cut surfaces and repair damaged finish at cuts.

D Anchor woodwork to anchors or blocking built in or directly attached to substrates. Secure with countersunk, concealed fasteners and blind nailing as required for complete installation. Use fine finishing nails or finishing screws for exposed fastening, countersunk and filled flush with woodwork and matching final finish if transparent finish is indicated.

E Cabinets: Install without distortion so doors and drawers fit openings properly and are accurately aligned. Adjust hardware to center doors and drawers in openings and to provide unencumbered operation. Complete installation of hardware and accessory items as indicated.
1. Install cabinets with no more than 1/8 inch in 96-inch (3 mm in 2400-mm) sag, bow, or other variation from a straight line.
2. Maintain veneer sequence matching of cabinets with transparent finish.
3. Fasten wall cabinets through back, near top and bottom, at ends and not more than 16 inches (400 mm) o.c. with No. 10 wafer-head sheet metal screws through metal backing or metal framing behind wall finish.

F Countertops: Anchor securely by screwing through corner blocks of base cabinets or other supports into underside of countertop.

1. Install countertops with no more than 1/8 inch in 96-inch (3 mm in 2400-mm) sag, bow, or other variation from a straight line.
2. Secure backsplashes to tops with concealed metal brackets at 16 inches (400 mm) o.c. and to walls with adhesive.
3. Calk space between backsplash and wall with sealant specified in Division 7 Section "Joint Sealants."

3.03 ADJUSTING AND CLEANING

A Repair damaged and defective woodwork, where possible, to eliminate functional and visual defects; where not possible to repair, replace woodwork. Adjust joinery for uniform appearance.

B Clean, lubricate, and adjust hardware.

C Clean woodwork on exposed and semiexposed surfaces. Touch up shop-applied finishes to restore damaged or soiled areas.

END OF SECTION

SECTION 07 41 13 - METAL ROOF PANELS

PART 1 - GENERAL

1.01 RELATED DOCUMENTS

A Drawings and general provisions of the Contract, including General and Supplementary Conditions and Division 1 Specification Sections, apply to this Section.

1.02 SUMMARY

A This Section includes the following:

1. Factory-formed and field-assembled, standing-seam metal roof panels.

B Related Sections include the following:

1. Division 7 Section "Metal Wall Panels" for factory-formed metal soffit panels.
2. Division 7 Section "Sheet Metal Flashing and Trim" for fasciae, copings, flashings and other sheet metal work not part of metal roof panel assemblies.
3. Division 7 Section "Joint Sealants" for field-applied sealants not otherwise specified in this Section.

1.03 DEFINITIONS

A Metal Roof Panel Assembly: Metal roof panels, attachment system components, miscellaneous metal framing, thermal insulation, and accessories necessary for a complete weathertight roofing system.

1.04 PERFORMANCE REQUIREMENTS

A General: Provide metal roof panel assemblies that comply with performance requirements specified as determined by testing manufacturers' standard assemblies similar to those indicated for this Project, by a qualified testing and inspecting agency.

B Thermal Movements: Provide metal roof panel assemblies that allow for thermal movements resulting from the following maximum change (range) in ambient and surface temperatures by preventing buckling, opening of joints, overstressing of components, failure of joint sealants, failure of connections, and other detrimental effects. Base engineering calculation on surface temperatures of materials due to both solar heat gain and nighttime-sky heat loss.

1. Temperature Change (Range): 120 deg F (67 deg C), ambient; 180 deg F (100 deg C), material surfaces.

1.05 SUBMITTALS

A Product Data: Include construction details, material descriptions, dimensions of individual components and profiles, and finishes for each type of metal roof panel and accessory.

B Shop Drawings: Show fabrication and installation layouts of metal roof panels; details of edge conditions, joints, panel profiles, corners, anchorages, trim, flashings, closures, and accessories; and special details.

1. Accessories: Include details of the following items:

    a) Flashing and trim.
    b) Gutters.
    c) Downspouts.

C Provide warranty in accordance with this specification section, in addition to the warranty and/or guarantee requirements stated elsewhere in Contract Documents including, but not limited to, Part III: Contract Documents Contract, Part IV: General Conditions, and Division 1 of technical specifications.

1.06 QUALITY ASSURANCE

A Source Limitations: Obtain each type of metal roof panels through one source from a single manufacturer.

B Product Options: Drawings indicate size, profiles, and dimensional requirements of metal roof panels and are based on the specific system indicated.

1. Do not modify intended aesthetic effects, as judged solely by Architect, except with Architect's approval. If modifications are proposed, submit comprehensive explanatory data to Architect for review.

1.07 DELIVERY, STORAGE, AND HANDLING

A Deliver components, sheets, metal roof panels, and other manufactured items so as not to be damaged or deformed. Package metal roof panels for protection during transportation and handling.

B Unload, store, and erect metal roof panels in a manner to prevent bending, warping, twisting, and surface damage.

C Stack metal roof panels on platforms or pallets, covered with suitable weathertight and ventilated covering. Store metal roof panels to ensure dryness. Do not store metal roof panels in contact with other materials that might cause staining, denting, or other surface damage.

D Protect strippable protective covering on metal roof panels from exposure to sunlight and high humidity, except to extent necessary for period of metal roof panel installation.

1.08 PROJECT CONDITIONS

A Weather Limitations: Proceed with installation only when existing and forecasted weather conditions permit assembly of metal roof panels to be performed according to manufacturers' written instructions and warranty requirements.

B Field Measurements: Verify locations of roof framing and roof opening dimensions by field measurements before metal roof panel fabrication and indicate measurements on Shop Drawings.

1.09 WARRANTY

A Provide warranty in accordance with this specification section, in addition to the warranty and/or guarantee requirements stated elsewhere in Contract Documents including, but not limited to, Part III: Contract Documents Contract, Part IV: General Conditions, and Division 1 of technical specifications.

B Warranty: Provide manufacturer's written warranty in which manufacturer agrees to repair or replace Metal Roof Panels that fail in materials or workmanship within specified warranty period twenty (20) years. Manufacturer may not disclaim any implied warranty such as merchantability or fitness for a particular purpose. Both the expressed and implied terms of the warranty shall be read together for the benefit of the District.

C Manufacturer's standard form in which manufacturer agrees to repair finish or replace metal roof panels that show evidence of deterioration of factory-applied finishes within specified warranty period.

1. Finish Warranty Period: 20 years from date of Project Acceptance, with no dollar limit.

PART 2 - PRODUCTS

2.01 UNDERLAYMENT MATERIALS

A Felts: ASTM D 226, Type II (No. 30), asphalt-saturated organic felts.

B Slip Sheet: Building paper, minimum 5 lb/100 sq. ft. (0.24 kg/sq. m), rosin sized.

2.02 MISCELLANEOUS MATERIALS

A Fasteners: Self-tapping screws, bolts, nuts, self-locking rivets and bolts, end-welded studs, and other suitable fasteners designed to withstand design loads. Provide exposed fasteners with heads matching color of metal roof panels by means of plastic caps or factory-applied coating.

1. Fasteners for Roof Panels: Self-drilling or self-tapping, zinc-plated, hex-head carbon-steel screws, with a stainless-steel cap or zinc-aluminum-alloy head and EPDM or neoprene sealing washer.

B Bituminous Coating: Cold-applied asphalt mastic, SSPC-Paint 12, compounded for 15-mil (0.4-mm) dry film thickness per coat. Provide inert-type noncorrosive compound free of asbestos fibers, sulfur components, and other deleterious impurities.

2.03 CONCEALED-FASTENER, LAP-SEAM METAL ROOF PANELS

A General: Provide factory-formed metal roof panels designed to be field assembled by lapping and interconnecting side edges of adjacent panels and mechanically attaching through panel to supports using concealed fasteners and factory-applied sealant in side laps. Include accessories required for weathertight installation.

B Standing-Seam-Profile, Concealed-Fastener Metal Roof Panels: Formed with raised, curved-top, standing-seam-shaped major rib at panel edge and intermediate stiffening ribs symmetrically spaced between major rib and panel edge.

1. Material: Aluminum-zinc alloy-coated steel sheet, 0.0159 inch to 0.0209 inch thick. 24 ga. *Design Span* as Manufactured by AEP Span, or approved equal.

a) Exterior Finish: Kynar.
b) Color: As selected by Architect from manufacturer's full range.

2. Material: Aluminum-zinc alloy-coated steel sheet,

3. 22 ga. *FlushPanel* as Manufactured by AEP Span, or approved equal at vertical wall (tower) panel locations.

    a) Exterior Finish: Kynar.
    b) Color: As selected by Architect from manufacturer's full range.
4. Panel Height: 1.750 inch (25 mm)
5. Uplift Rating: UL 30.

2.04 ACCESSORIES

A Roof Panel Accessories: Provide components required for a complete metal roof panel assembly including trim, copings, fasciae, corner units, ridge closures, clips, flashings, sealants, gaskets, fillers, closure strips, and similar items. Match material and finish of metal roof panels, unless otherwise indicated.

1. Closures: Provide closures at eaves and ridges, fabricated of same metal as metal roof panels.
2. Backing Plates: Provide metal backing plates at panel end splices, fabricated from material recommended by manufacturer.

B Flashing and Trim: Formed from 0.0179-inch- (0.45-mm-) thick, zinc-coated (galvanized) steel sheet or aluminum-zinc alloy-coated steel sheet prepainted with coil coating. Provide flashing and trim as required to seal against weather and to provide finished appearance. Locations include, but are not limited to, eaves, rakes, corners, bases, framed openings, ridges, fasciae, and fillers. Finish flashing and trim with same finish system as adjacent metal roof panels.

C Gutters: Formed from 0.0179-inch- thick, zinc-coated (galvanized) steel sheet or aluminum-zinc alloy-coated steel sheet prepainted with coil coating. Match profile of gable trim, complete with end pieces, outlet tubes, and other special pieces as required. Fabricate in minimum 96-inch- long sections, sized according to SMACNA's "Architectural Sheet Metal Manual." Provide 7” deep by 4” wide gutters min. Furnish gutter supports spaced 48 inches o.c., fabricated from same metal as gutters. Provide bronze, copper, or aluminum wire ball strainers at outlets. Finish gutters to match roof fascia and rake trim.

2.05 FABRICATION

A General: Fabricate and finish metal roof panels and accessories at the factory to greatest extent possible, by manufacturer's standard procedures and processes, as necessary to fulfill indicated performance requirements demonstrated by laboratory testing. Comply with indicated profiles and with dimensional and structural requirements.

B Provide panel profile, including major ribs and intermediate stiffening ribs, if any, for full length of panel.

C Sheet Metal Accessories: Fabricate flashing and trim to comply with recommendations in SMACNA's "Architectural Sheet Metal Manual" that apply to the design, dimensions, metal, and other characteristics of item indicated.

1. Form exposed sheet metal accessories that are without excessive oil canning, buckling, and tool marks and that are true to line and levels indicated, with exposed edges folded back to form hems.
2. Sealed Joints: Form nonexpansion but movable joints in metal to accommodate elastomeric sealant to comply with SMACNA standards.

3. Conceal fasteners and expansion provisions where possible. Exposed fasteners are not allowed on faces of accessories exposed to view.
4. Fabricate cleats and attachment devices from same material as accessory being anchored or from compatible, noncorrosive metal recommended by metal roof panel manufacturer.

2.06 FINISHES, GENERAL

A Comply with NAAMM's "Metal Finishes Manual for Architectural and Metal Products" for recommendations for applying and designating finishes.

B Protect mechanical and painted finishes on exposed surfaces from damage by applying a strippable, temporary protective covering before shipping.

C Appearance of Finished Work: Variations in appearance of abutting or adjacent pieces are acceptable if they are within one-half of the range of approved Samples. Noticeable variations in the same piece are not acceptable. Variations in appearance of other components are acceptable if they are within the range of approved Samples and are assembled or installed to minimize contrast.

PART 3 - EXECUTION

3.01 EXAMINATION

A Examine roughing-in for components and systems penetrating metal roof panels to verify actual locations of penetrations relative to seam locations of metal roof panels before metal roof panel installation.

B Proceed with installation only after unsatisfactory conditions have been corrected.

3.02 PREPARATION

A Clean substrates of substances harmful to insulation, including removing projections capable of interfering with insulation attachment.

B Install flashings and other sheet metal to comply with requirements specified in Division 7 Section "Sheet Metal Flashing and Trim."

3.03 UNDERLAYMENT INSTALLATION

A Felt Underlayment: Install felt underlayment and building-paper slip sheet on roof sheathing under metal roof panels, unless otherwise recommended by metal roof panel manufacturer. Use adhesive for temporary anchorage, where possible, to minimize use of mechanical fasteners under metal roof panels. Apply at locations indicated below, in shingle fashion to shed water, with lapped joints of not less than 2 inches (50 mm).

1. Apply from eave to ridge.

B Apply slip sheet over underlayment before installing metal roof panels.

3.04 METAL ROOF PANEL INSTALLATION, GENERAL

A General: Provide metal roof panels of full length from eave to ridge, unless otherwise indicated or restricted by shipping limitations. Anchor metal roof panels and other

components of the Work securely in place, with provisions for thermal and structural movement.

1. Field cutting of metal roof panels by torch is not permitted.
2. Flash and seal metal roof panels with weather closures at eaves, rakes, and at perimeter of all openings. Fasten with self-tapping screws.
3. Stagger panel splices and end laps to avoid a four-panel lap splice condition.
4. Lap metal flashing over metal roof panels to allow moisture to run over and off the material.

B Fasteners:

1. Steel Roof Panels: Use stainless-steel fasteners for surfaces exposed to the exterior and galvanized steel fasteners for surfaces exposed to the interior.

C Joint Sealers: Install gaskets, joint fillers, and sealants where indicated and where required for weatherproof performance of metal roof panel assemblies. Provide types of gaskets, fillers, and sealants indicated or, if not indicated, types recommended by metal roof panel manufacturer.

1. Seal metal roof panel end laps with double beads of tape or sealant, full width of panel. Seal side joints where recommended by metal roof panel manufacturer.

3.05 FIELD-ASSEMBLED METAL ROOF PANEL INSTALLATION

A Standing-Seam Metal Roof Panels: Fasten metal roof panels to supports with concealed clips at each standing-seam joint at location, spacing, and with fasteners recommended by manufacturer.

1. Install clips to supports with self-tapping fasteners.
2. Install pressure plates at locations indicated in manufacturer's written installation instructions.
3. Snap Joint: Nest standing seams and fasten together by interlocking and completely engaging factory-applied sealant.

B Fascia Panels: Align bottom of panels and fasten with blind rivets, bolts, or self-tapping screws. Flash and seal panels with weather closures where fasciae meet soffits, along lower panel edges, and at perimeter of all openings.

3.06 ACCESSORY INSTALLATION

A General: Install accessories with positive anchorage to building and weathertight mounting and provide for thermal expansion. Coordinate installation with flashings and other components.

1. Install components required for a complete metal roof panel assembly including trim, copings, ridge closures, seam covers, flashings, sealants, gaskets, fillers, closure strips, and similar items.

B Flashing and Trim: Comply with performance requirements, manufacturer's written installation instructions, and SMACNA's "Architectural Sheet Metal Manual." Provide concealed fasteners where possible, and set units true to line and level as indicated. Install Work with laps, joints, and seams that will be permanently watertight and weather resistant.

1. Install exposed flashing and trim that is without excessive oil canning, buckling, and tool marks and that is true to line and levels indicated, with exposed edges folded back to form hems. Install sheet metal flashing and trim to fit substrates and to result in waterproof and weather-resistant performance.
2. Expansion Provisions: Provide for thermal expansion of exposed flashing and trim. Space movement joints at a maximum of 10 feet (3 m) with no joints allowed within 24 inches (600 mm) of corner or intersection. Where lapped or bayonet-type expansion provisions cannot be used or would not be sufficiently weather resistant and waterproof, form expansion joints of intermeshing hooked flanges, not less than 1 inch (25 mm) deep, filled with mastic sealant (concealed within joints).

C Gutters: Join sections with riveted and soldered or lapped and sealed joints. Attach gutters to eave with gutter hangers spaced not more than 4 feet (1.2 m) o.c. using manufacturer's standard fasteners. Provide end closures and seal watertight with sealant. Provide for thermal expansion.

3.07 FIELD QUALITY CONTROL

A Remove and replace applications of metal roof panels where inspections indicate that they do not comply with specified requirements.

3.08 CLEANING AND PROTECTION

A Remove temporary protective coverings and strippable films, if any, as metal roof panels are installed, unless otherwise indicated in manufacturer's written installation instructions. On completion of metal roof panel installation, clean finished surfaces as recommended by metal roof panel manufacturer. Maintain in a clean condition during construction.

B Replace metal roof panels that have been damaged or have deteriorated beyond successful repair by finish touchup or similar minor repair procedures.

END OF SECTION

SECTION 08 12 16 - INTERIOR ALUMINUM FRAMES

PART 1 - GENERAL

1.01 RELATED DOCUMENTS

A Drawings and general provisions of the Contract, including General and Supplementary Conditions and Division 1 Specification Sections, apply to this Section.

1.02 SUMMARY

A This Section includes the following:
1. Aluminum door frames.
2. Aluminum glazing frames.

B Related Sections include the following:
1. Division 8 Section "Flush Wood Doors."
2. Division 8 Section "Finish Hardware."
3. Division 9 Section "Gypsum Board Assemblies."

1.03 SUBMITTALS

A Product Data: Include construction details, material descriptions, dimensions of individual components and profiles, and finishes for each product specified.

B Shop Drawings: Show fabrication and installation details. Include plans, elevations, sections, and details of components including hardware, glazing, and glazing stops. Show attachments to other Work.

C Samples for Verification: For each type of exposed finish required, prepared on Samples of manufacturer's standard sizes and of same thickness and material indicated for the Work. If finishes involve normal color and texture variations, include sample sets showing the full range of variations expected.

D Provide warranty in accordance with the warranty and/or guarantee requirements stated elsewhere in Contract Documents including, but not limited to, Part III: Contract Documents Contract, Part IV: General Conditions, and Division 1 of technical specifications.

1.04 QUALITY ASSURANCE

A Installer Qualifications: An experienced installer who has completed interior aluminum framing systems similar in material, design, and extent to those indicated for this Project and whose Work has resulted in construction with a record of successful in-service performance.

B Manufacturer Qualifications: A firm experienced in manufacturing interior aluminum framing systems similar to those indicated for this Project and with a record of successful in-service performance.

C Source Limitations: Obtain aluminum frames through one source from a single manufacturer with the capacity and resources to provide products of consistent quality in appearance and physical properties.

D Product Options: Drawings indicate dimensions, arrangements, alignment, and profiles of components and assemblies as they relate to sightlines, to one another, and to adjoining construction size. Other manufacturers' products complying with requirements may be considered. Refer to Division 1 Section "Substitution Procedures."

1. Do not modify intended aesthetic effects, as judged solely by Architect, except with Architect's approval. If modifications are proposed, submit comprehensive explanatory data to Architect for review.

1.05 DELIVERY, STORAGE, AND HANDLING

A Deliver frames palleted, wrapped, or crated to provide protection during transit and job storage.

B Inspect frames on delivery for damage. Minor damages may be repaired provided refinished items match new Work and are approved by Architect; otherwise, remove and replace damaged items as directed.

C Store frames at building site under cover and as near as possible to final installation location. Do not use covering material that will cause discoloration of aluminum finish.

1.06 PROJECT CONDITIONS

A Environmental Limitations: Do not install interior aluminum frames until spaces are enclosed and weatherproof; wet work in spaces is complete and dry; flooring, walls, ceilings, and Work above ceilings is complete; and ambient temperature and humidity conditions are maintained at the levels indicated for Project when occupied for its intended use.

B Field Measurements: Verify interior aluminum frame dimensions by field measurements before fabrication and indicate measurements on Shop Drawings. Coordinate fabrication schedule with construction progress to avoid delaying the Work.

1. Established Dimensions: Where field measurements cannot be made without delaying the Work, establish opening and wall dimensions and note on Shop Drawings that these are not measured dimensions. Proceed with fabricating interior aluminum frames without field measurements. Coordinate wall, floor, and ceiling construction to ensure that actual opening dimensions correspond to established dimensions.

PART 2 - PRODUCTS

2.01 MANUFACTURERS

A MANUFACTURERS: Subject to compliance with requirements, provide products by the following or approved equivalent:

1. Western Integrated Materials, Inc., Series 300 and 400.
2. Versatrac.
3. Or Approved equal

2.02 Not Used

1.01 MATERIALS

A Extruded Aluminum: ASTM B 221 alloy 6063-T5 or alloy and temper required to suit structural and finish requirements.

1.02 COMPONENTS

A General: Provide interior aluminum frame components that comply with dimensions, profiles, and relationships to adjoining Work of components indicated on Drawings.

B Door Frames: Extruded aluminum, not less than 0.062 inch thick, reinforced for hinges and strikes.

C Glass Frames: Extruded aluminum, not less than 0.062 inch thick, designed for glass thickness indicated.

D Trim: Extruded aluminum, not less than 0.062 inch thick, removable snap-in glass stops and door stops without exposed fasteners.

1.03 ACCESSORIES

A Fasteners: Aluminum, nonmagnetic stainless-steel or other noncorrosive metal fasteners compatible with frames, stops, panels, reinforcement plates, hardware, anchors, and other items being fastened.

B Door Silencers (Mutes): Manufacturer's standard mohair or vinyl.

C Glazing Gaskets: Manufacturer's standard extruded or molded plastic, to accommodate glazing.

D Glazing: As specified in Division 8 Section "Glazing."

E Hardware: As specified in Division 8 Section "Finish Hardware."

1.04 FABRICATION

A Machine jambs and prepare for hardware, with concealed reinforcement plates, drilled and tapped as required, and fastened within frame with concealed screws.

B Provide concealed corner reinforcements and alignment clips for precise butt or mitered connections.

C Fabricate frames for glass to allow glass replacement without dismantling frame.

D Fabricate all components to allow secure installation without exposed fasteners.

1.05 ALUMINUM FINISHES

A General: Comply with NAAMM's "Metal Finishes Manual for Architectural and Metal Products" for recommendations for applying and designating finishes.

B Finish designations prefixed by AA comply with the system established by the Aluminum Association for designating aluminum finishes.

C Class II, Clear Anodic Finish: AA-M12C22A31 (Mechanical Finish: nonspecular as fabricated; Chemical Finish: etched, medium matte; Anodic Coating: Architectural Class II, clear coating 0.010 mm or thicker) complying with AAMA 607.1.

PART 3 - EXECUTION

3.01 EXAMINATION

A Examine walls, floors, and ceilings for suitable conditions where interior aluminum frames are to be installed.

B Verify that wall thickness does not exceed standard tolerances allowed by throat size indicated.

C Proceed with installation only after unsatisfactory conditions have been corrected.

3.02 INSTALLATION

A Comply with frame manufacturer's written installation instructions and approved Shop Drawings.

B Install frames plumb and square, securely anchored to substrates with fasteners recommended by frame manufacturer.

3.03 CLEANING AND ADJUSTING

A Clean exposed frames promptly after installation, using cleaning methods recommended by frame manufacturer.
1. Clean and maintain anodized aluminum according to AAMA 609.

B Remove and replace frames with damaged finish that cannot be satisfactorily repaired.

3.04 PROTECTION

A Provide protection required to ensure that framing will be without damage or deterioration on Project Acceptance.

END OF SECTION

SECTION 08 33 00 - FOUR- FOLD DOOR SYSTEMS

PART 1 - GENERAL

1.1 RELATED DOCUMENTS

A. Drawings and general provisions of the Contract, including General and Supplementary Conditions and Division 1 Specification Sections, apply to this Section.

1.2 SUMMARY

A. This Section includes Four-Fold metal doors with surface mounted tube frames.

B. Operation of Four-Fold metal doors includes overhead mounted electro-mechanical operators.

1.3 SUBMITTALS

A. General: Submit each item in this Article according to the Conditions of the Contract and Division 1 Specification Sections.

B. Product Data for each type of product specified consisting of manufacturer's technical Product Data and installation instructions for each type of door required, including data substantiating that products comply with requirements.

C. Submittal Drawings showing fabrication and installation of Four-Fold metal doors including plans, elevations, sections, details of components, hardware, operating mechanism, and attachments to the other units of Work. Include wiring diagrams for coordination with electrical trade.

1.4 QUALITY ASSURANCE

A. Doors shall be designed to withstand external or internal horizontal wind loads of **(25)** pounds minimum per square foot. The maximum allowable deflection shall not exceed 1/120 of the span. Fiber stresses in main members shall be limited to 27,000 pounds per square inch. Steel frames shall be designed in accordance with the AISC "Steel Construction Manual".

B. Door manufacturer shall have at least 10 years experience in manufacturing door type specified.

1.5 DELIVERY, STORAGE AND HANDLING

A. Store delivered materials and equipment in dry locations with adequate ventilation, free from dust and water, and so as to permit access for inspection and handling.

B. Handle materials carefully to prevent damage.

1.6 WARRANTY

A. The door manufacturer shall provide a written standard limited warranty for material and workmanship.

PART 2 - PRODUCTS

2.1 MANUFACTURERS

A. Manufacturers: Four-Fold industrial metal doors manufactured by Door Engineering and Manufacturing, 400 Cherry Street, Kasota, MN 56050, (800)-959-1352 or equal products by other manufacturers approved in advance.

FF300 Series: Glazed

2.2 MATERIALS

A. Steel Tube: ASTM A513 and ASTM A500/A500M

B. Steel Sheets: Steel sheets of commercial quality, complying with ASTM A1011/A1011M hot-rolled steel sheet.

C. Hardware: Manufacturer's standard components.

D. Fasteners: Zinc-coated steel.

2.3 FOUR-FOLD DOORS

A. Construction: Door framing shall be minimum 11-gauge structural steel tube with 14-gauge steel sheet on the exterior and interior faces. Sheeting shall be formed on the vertical edges with no visible welds on the interior or exterior panel faces. All frames and framing members shall be true to dimension and square in all directions, and no door shall be bowed, warped, or out of line, in the vertical or horizontal plane of the door opening by more than 1/8 inch in 20 feet. Exposed welds and welds which interfere with the installation of various parts shall be ground smooth and flush.

B. Surface Mounted Tube Frame: Supply pre-hung tube frame system constructed of minimum TS6x4x0.25, designed to anchor to masonry wall construction or weld to steel structure. All hinges, track supports and operator supports shall be factory attached.

C. Factory finish: Door Panels and Tube Frames shall be finished with manufacturer's standard PPG Spectracron epoxy primer and polyurethane top coat. Architect to select from Manufacturer's full range.

1. Operator and operating hardware shall be powder-coated manufacturer's standard gray.

D. Hardware: Hardware shall include guide tracks and brackets, trolleys, center guides, not less than three pairs of jamb and fold hinges per opening, and all bolts, nuts, fasteners, etc. necessary for complete installation and operation.

1. All hardware, including hinges and trolleys, shall be bolted to the panel for easy removal for service or panel replacement.

2. Doors up to 16' wide and under 30psf windload shall require no floor mounted supports, guides or tracks.

3. Top tracks shall be adjustable on the end track hangers to allow for adjustment of the door panels in the open position and easily replaceable without removal of the door framing or operators.

E. Hinges: Jamb hinges shall be dual shear and have two thrust bearings and two needle bearings. Fold hinges shall be stainless steel and be dual shear with two thrust bearings. All bearings shall be completely concealed within the hinge barrel and include grease zerks. All hinge pins shall be minimum ¾" diameter hardened steel.

F. Hinge Guards: Provide plastic guards at jamb hinges to prevent access through hinge space.

G. Weatherstripping: Material shall be adjustable and readily replaceable and provide a substantially weather-tight installation. Weatherstripping at center shall be 1/16" cloth inserted neoprene and include no exposed fasteners on the exterior face of the panel. Weatherstripping at sill shall include two 1/16" cloth inserted neoprene sweeps with an aluminum retainer. The retainer shall be attached to the door with adhesive.

H. Perimeter Weatherstripping: Provide jamb and head weatherstipping of 1/16" cloth-inserted neoprene bulb (or closed cell neoprene).

I. Vision Panels: Provide 1" insulated, tempered, vision panels of the size, shape and location as noted on the drawings.

2.4 OPERATOR

A. Each Four-Fold door shall be operated by an overhead mounted electro-mechanical drive unit designed for high cycle operation. Operator consists of an electric motor, gear reducer, and rotating drive arm. The door shall be operated with connecting rods attached to the rotating drive arm on the operator and to control arms attached to the jamb door section and to the door lintel. The connecting rods shall be positive drive, keeping the door under firm control at all times. The connecting rods shall be fitted with spherical bearings and control arms shall be equipped with oil impregnated bronze bearings on polished shafts.

B. Operator shall be instantly reversible, open and close rapidly and start and stop gradually. Operator shall be adjustable to allow door to fully clear the opening. Operator shall automatically lock the door in the closed position. Operator shall be equipped with disengaging mechanism to convert to manual operation.

C. Electric motor shall be of sufficient size to operate doors under normal operating conditions at no more than 75 percent of rated capacity. The motor shall be wound for three phase 208/230/480 VAC, 60 Hertz operation.

D. Electric Controls: Controls shall be furnished by the door manufacturer and shall be complete for each door, and built in accordance with the latest NEMA standards. Incoming electrical shall be : 120VAC single phase, 208VAC single phase, 208/230VAC 3-phase, 480VAC 3-phase.

1. Control panel assemblies shall be UL listed as per NFPA70.

2. Controls shall include a programmable logic controller with digital message display or LED indicators. Controller shall include programmable close timers and programmable inputs/outputs.

3. Controls shall include a variable frequency drive with independent adjustment of the opening and closing speeds.

4. Enclosures shall be NEMA 4 with disconnect switch.

5. Pushbuttons (interior) for each door shall have one (1) momentary pressure three-button push-button station marked “OPEN”, “CLOSE” and “STOP”. Push button enclosure shall be NEMA 4.

6. Limit switches shall be provided to stop the travel of the door in its fully open or fully closed position.

7. Safety edges: Provide 4-wire fail-safe electric safety edges on leading edge of all doors to reverse door upon contact with obstruction.

8. Photo eyes: Provide (1) exterior, jamb mounted, light Curtain type photo eyes, NEMA 4 rated. Photo eye shall cover from floor level to 72” above floor.

9. Presence Sensor: Provide (1) interior, overhead mounted, presence sensor with pre-open and pre-close safety fields. Sensor shall be LZR-Widescan or equal.

10. Radio controls: Provide one (1) radio receiver and (1) single button remotes per door. Remotes to open and close doors with single button.

11. Timer Activation Loop Detectors (fire station applications): Provide “pulse on exit type” loop detector to activate auto close timer once loop has been activated and cleared, include hand/auto switch to deactivate timer. G.C. to coordinate installation of preformed loop with installer prior to exterior apron being poured.

12. Warning Horn/Strobe: Provide warning light and strobe. Include outputs PLC to allow for activation while door is in motion both opening and closing, along with activation prior to closing. Include programmable “delay-to-close” timer which activates the warning horn for a set time, prior to the door closing.

13. Wiring: Door manufacturer shall supply controls and components only. Electrical contractor shall install controls and furnish and install conduits and wiring for jobsite power and control wiring.

PART 3 - EXECUTION

3.1 INSTALLATION

A. Install Four-Fold metal doors in strict accordance with the approved drawings by qualified door erection crews. All door openings shall be completely prepared by the general contractor prior to the installation of the doors. Permanent or temporary electric wiring shall be brought to the door opening before installation is started and shall be completed so as not to delay the inspection test.

B. Doors shall be set plumb, level, and square, and with all parts properly fastened and mounted. All moving parts shall be tested and adjusted and left in good operating condition.

3.2 ADJUSTING AND CLEANING

A. Inspection of the doors and a complete operating test will be made by the installer in the presence of the general contractor or architect as soon as the erection is complete. Any defects noted shall be corrected. After door approval in the above test, the general

contractor must assume the responsibility for any damage or rough handling of the doors during construction until the building is turned over to the owner and final inspection is made.

B. Clean surfaces and repaint abraded or damaged finished surfaces to match factory-applied finish.

END OF SECTION

SECTION 08 33 23 - OVERHEAD COILING DOORS

PART 1 - GENERAL

A. RELATED DOCUMENTS

1. Drawings and general provisions of the Contract, including General and Supplementary Conditions and Division 1 Specification Sections, apply to this Section.

B. SUMMARY

1. Related Sections:

    A. Division 5 Section "Metal Fabrications" for miscellaneous steel supports.

C. PERFORMANCE REQUIREMENTS

1. Operation Cycles: Provide overhead coiling door components and operators capable of operating for not less than number of cycles indicated for each door. One operation cycle is complete when a door is opened from the closed position to the fully open position and returned to the closed position.

D. SUBMITTALS

1. Product Data: For each type and size of overhead coiling door and accessory. Include the following:

    A. Construction details, material descriptions, dimensions of individual components, profiles for slats, and finishes.
    B. Rated capacities, operating characteristics, electrical characteristics, and furnished accessories.

2. Maintenance Data: For overhead coiling doors to include in maintenance manuals.

3. Provide warranty in accordance with the warranty and/or guarantee requirements stated elsewhere in Contract Documents including, but not limited to, Part III: Contract Documents Contract, Part IV: General Conditions, and Division 1 of technical specifications.

E. QUALITY ASSURANCE

1. Installer Qualifications: Manufacturer's authorized representative who is trained and approved for both installation and maintenance of units required for this Project.

2. Source Limitations: Obtain overhead coiling doors from single source from single manufacturer.

    A. Obtain operators and controls from overhead coiling door manufacturer.

PART 2 – PRODUCTS

A. DOOR CURTAIN MATERIALS AND CONSTRUCTION

1. Door Curtains: Fabricate overhead coiling-door curtain of interlocking metal slats, designed to withstand wind loading indicated, in a continuous length for width of door without splices. Unless otherwise indicated, provide slats of thickness and mechanical properties recommended by door manufacturer for performance, size, and type of door indicated, and as follows:

   A. Steel Door Curtain Slats: Zinc-coated (galvanized), cold-rolled structural steel sheet; complying with ASTM A 653/A 653M, with G90 (Z275) zinc coating; nominal sheet thickness (coated) of 0.028 inch (0.71 mm) and as required to meet requirements.
   B. Stainless-Steel Door Curtain Slats: ASTM A 666, Type 304; sheet thickness of 0.025 inch (0.64 mm) and as required to meet requirements.
   C. Gasket Seal: Provide insulated slats with manufacturer's standard interior-to-exterior thermal break or with continuous gaskets between slats.
   D. Basis of Design: Overhead Door 610S

2. Curtain Jamb Guides: Manufacturer's standard angles or channels and angles of same material and finish as curtain slats unless otherwise indicated, with sufficient depth and strength to retain curtain, to allow curtain to operate smoothly, and to withstand loading. Slot bolt holes for guide adjustment. Provide removable stops on guides to prevent overtravel of curtain.

B. LOCKING DEVICES

1. Slide Bolt: Fabricate with side-locking bolts to engage through slots in tracks for locking by padlock, located on both left and right jamb sides, operable from coil side.

C. CURTAIN ACCESSORIES

1. Push/Pull Handles: Equip each push-up-operated or emergency-operated door with lifting handles on each side of door, finished to match door.

2. Provide pull-down straps or pole hooks for doors more than 84 inches (2130 mm) high.

D. COUNTERBALANCING MECHANISM

1. General: Counterbalance doors by means of manufacturer's standard mechanism with an adjustable-tension, steel helical torsion spring mounted around a steel shaft and contained in a spring barrel connected to top of curtain with barrel rings. Use grease-sealed bearings or self-lubricating graphite bearings for rotating members.

2. Counterbalance Barrel: Fabricate spring barrel of manufacturer's standard hot-formed, structural-quality, welded or seamless carbon-steel pipe, of sufficient diameter and wall thickness to support rolled-up curtain without distortion of slats and to limit barrel deflection to not more than 0.03 in./ft. (2.5 mm/m) of span under full load.

3. Spring Balance: One or more oil-tempered, heat-treated steel helical torsion springs. Size springs to counterbalance weight of curtain, with uniform adjustment accessible from outside barrel. Secure ends of springs to barrel and shaft with cast-steel barrel plugs.

4. Torsion Rod for Counterbalance Shaft: Fabricate of manufacturer's standard cold-rolled steel, sized to hold fixed spring ends and carry torsional load.

5. Brackets: Manufacturer's standard mounting brackets of either cast iron or cold-rolled steel plate.

E. AUTOMATOC DOOR OPERATORS

1. Equip door with manufacturer's heavy duty automatic door operator and motor unless another type of door operator is indicated. Coordinate installation of door & operator with alerting system and remote entry system.

F. DOOR ASSEMBLY

1 Manufacturers: Subject to compliance with requirements, available manufacturers offering products that may be incorporated into the Work include, but are not limited to, the following:

A. Cookson Company.
B. Overhead Door Corporation.
C. Or Approved Equal

2. Operation Cycles: Not less than 20,000.

3. Door Curtain Material: Galvanized steel.

4. Door Curtain Slats: Flat profile slats of 1-1/2-inch center-to-center height.

5. Curtain Jamb Guides: Galvanized steel. Provide continuous integral wear strips to prevent metal-to-metal contact and to minimize operational noise.

6. Integral Frame, Hood, and Fascia: Galvanized steel.

A. Mounting: Inside Face of wall

7. Door Finish:

A. Powder-Coated Finish: Color as selected by Architect from manufacturer's full range.

G. GENERAL FINISH REQUIREMENTS

1. Comply with NAAMM's "Metal Finishes Manual for Architectural and Metal Products" for recommendations for applying and designating finishes.

2. Appearance of Finished Work: Noticeable variations in same piece are not acceptable. Variations in appearance of adjoining components are acceptable if they are within the range of approved Samples and are assembled or installed to minimize contrast.

H. STEEL AND GALVANIZED-STEEL FINISHES

1. Powder-Coat Finish.

PART 3 - EXECUTION

A. EXAMINATION

1. Examine substrates areas and conditions, with Installer present, for compliance with requirements for substrate construction and other conditions affecting performance of the Work.

2. Examine locations of electrical connections.

3. Proceed with installation only after unsatisfactory conditions have been corrected.

B. INSTALLATION

1. Install overhead coiling doors and operating equipment complete with necessary hardware, anchors, inserts, hangers, and equipment supports; according to manufacturer's written instructions and as specified.

2. Install overhead coiling doors, hoods, and operators at the mounting locations indicated for each door.

3. Accessibility: Install overhead coiling doors, switches, and controls along accessible routes in compliance with regulatory requirements for accessibility.

4. Smoke-Control Doors: Install according to NFPA 80 and NFPA 105.

C. STARTUP SERVICE

1. Engage a factory-authorized service representative to perform startup service.

2. Perform installation and startup checks according to manufacturer's written instructions.

3. Test and adjust controls and safeties. Replace damaged and malfunctioning controls and equipment.

D. ADJUSTING

1. Adjust hardware and moving parts to function smoothly so that doors operate easily, free of warp, twist, or distortion.

2. Lubricate bearings and sliding parts as recommended by manufacturer.

E. DEMONSTRATION

1. Engage a factory-authorized service representative to train City's maintenance personnel to adjust, operate, and maintain overhead coiling doors.

END OF SECTION

SECTION 08 41 10 - ALUMINUM-FRAMED ENTRANCES AND STOREFRONTS

PART 1 - GENERAL

1.01 RELATED DOCUMENTS

A Drawings and general provisions of the Contract, including General and Supplementary Conditions and Division 1 Specification Sections, apply to this Section.

1.02 SUMMARY

A This Section includes the following:
1. Exterior aluminum-framed storefronts.
   a) Glazing is retained mechanically with gaskets on four sides.
2. Exterior manual-swing aluminum doors.

B Related Sections include the following:
1. Division 7 Section "Joint Sealants" for installation of joint sealants installed with aluminum-framed systems and for sealants to the extent not specified in this Section.
2. Division 8 Section "Door Hardware" for hardware to the extent not specified in this Section.
3. Division 8 Section "Glazing" for glazing requirements to the extent not specified in this Section.

1.03 PERFORMANCE REQUIREMENTS

A General: Provide aluminum-framed systems, including anchorage, capable of withstanding, without failure, the effects of the following:
1. Structural loads.
2. Thermal movements.
3. Movements of supporting structure indicated on Drawings including, but not limited to, story drift and deflection from uniformly distributed and concentrated live loads.
4. Dimensional tolerances of building frame and other adjacent construction.
5. Failure includes the following:
   a) Deflection exceeding specified limits.
   b) Thermal stresses transferred to building structure.
   c) Framing members transferring stresses, including those caused by thermal and structural movements, to glazing.
   d) Noise or vibration created by wind and thermal and structural movements.
   e) Loosening or weakening of fasteners, attachments, and other components.
   f) Sealant failure.
   g) Failure of operating units to function properly.

1.04 SUBMITTALS

A Product Data: Include construction details, material descriptions, dimensions of individual components and profiles, and finishes for each type of product indicated.

B Shop Drawings: For aluminum-framed systems. Include plans, elevations, sections, details, and attachments to other Work.
1. Include details of provisions for system expansion and contraction and for draining moisture occurring within the system to the exterior.

2. For entrances, include hardware schedule and indicate operating hardware types, functions, quantities, and locations.

C Product Test Reports: Based on evaluation of comprehensive tests performed by a qualified testing agency, for aluminum-framed systems.

D Maintenance Data: For aluminum-framed systems to include in maintenance manuals.

1.05 QUALITY ASSURANCE

A Installer Qualifications: Capable of assuming engineering responsibility and performing Work of this Section and who is acceptable to manufacturer.
1. Engineering Responsibility: Preparation of data for aluminum-framed systems including Shop Drawings based on testing and engineering analysis of manufacturer's standard units in assemblies similar to those indicated for this Project and submission of reports of tests performed on manufacturer's standard assemblies.

B Product Options: Information on Drawings and in Specifications establishes requirements for systems' aesthetic effects and performance characteristics. Aesthetic effects are indicated by dimensions, arrangements, alignment, and profiles of components and assemblies as they relate to sightlines, to one another, and to adjoining construction. Performance characteristics are indicated by criteria subject to verification by one or more methods including preconstruction testing, field testing, and in-service performance.
1. Do not modify intended aesthetic effects, as judged solely by Architect, except with Architect's approval. If modifications are proposed, submit comprehensive explanatory data to Architect for review.

C Accessible Entrances: Comply with the "Americans with Disabilities Act (ADA), Accessibility Guidelines for Buildings and Facilities (ADAAG)."

1.06 PROJECT CONDITIONS

A Field Measurements: Verify actual locations of structural supports for aluminum-framed systems by field measurements before fabrication and indicate measurements on Shop Drawings.

PART 2 - PRODUCTS

2.01 MANUFACTURERS: Subject to compliance with requirements, provide products by the following:
1. Kawneer.
2. United States Aluminum.
3. Vistawall Architectural Products.
4. Or approved equal

2.02 MATERIALS

A Basis of Design: Kawneer, “Trifab 601”, 2”x6”, center glass plane.

B Aluminum: Alloy and temper recommended by manufacturer for type of use and finish indicated.

2.03 FRAMING SYSTEMS

A Framing Members: Manufacturer's standard extruded-aluminum framing members of thickness required and reinforced as required to support imposed loads.

B Brackets and Reinforcements: Manufacturer's standard high-strength aluminum with nonstaining, nonferrous shims for aligning system components.

C Fasteners and Accessories: Manufacturer's standard corrosion-resistant, nonstaining, nonbleeding fasteners and accessories compatible with adjacent materials.
1. Where fasteners are subject to loosening or turning out from thermal and structural movements, wind loads, or vibration, use self-locking devices.
2. Reinforce members as required to receive fastener threads.

D Flashing: Manufacturer's standard corrosion-resistant, nonstaining, nonbleeding flashing compatible with adjacent materials. Form exposed flashing from sheet aluminum finished to match framing and of sufficient thickness to maintain a flat appearance without visible deflection.

E Framing System Gaskets and Sealants: Manufacturer's standard recommended by manufacturer for joint type.

2.04 GLAZING SYSTEMS

A Glazing: As specified in Division 8 Section "Glazing."

B Glazing Gaskets: Manufacturer's standard compression types, replaceable, molded or extruded, that maintain uniform pressure and watertight seal.

C Spacers and Setting Blocks: Manufacturer's standard elastomeric types.

2.05 DOORS

A Doors: Manufacturer's standard glazed doors, for manual swing operation.
1. Door Construction: 1-3/4-inch (44.5-mm) overall thickness, with minimum 0.125-inch- (3.2-mm-) thick, extruded-aluminum tubular rail and stile members. Mechanically fasten corners with reinforcing brackets that are deep penetration and fillet welded or that incorporate concealed tie rods.
2. Door Design: Wide stile; 5-inch (127-mm) nominal width.
   a) Accessible Doors: Smooth surfaced for width of door in area within 10 inches (255 mm) above floor or ground plane.
3. Glazing Stops and Gaskets: Beveled or Square, snap-on, extruded-aluminum stops and preformed gaskets.

B Door Hardware: As specified in Division 8 Section "Door Hardware."

2.06 ACCESSORY MATERIALS

A Joint Sealants: For installation at perimeter of aluminum-framed systems, as specified in Division 7 Section "Joint Sealants."

B Bituminous Paint: Cold-applied asphalt-mastic paint complying with SSPC-Paint 12 requirements except containing no asbestos, formulated for 30-mil (0.762-mm) thickness per coat.

2.07 FABRICATION

A Form aluminum shapes before finishing.

B Framing Members, General: Fabricate components that, when assembled, have the following characteristics:
1. Profiles that are sharp, straight, and free of defects or deformations.
2. Accurately fitted joints with ends coped or mitered.
3. Means to drain water passing joints, condensation occurring within framing members, and moisture migrating within the system to exterior.
4. Physical and thermal isolation of glazing from framing members.
5. Accommodations for thermal and mechanical movements of glazing and framing to maintain required glazing edge clearances.
6. Provisions for field replacement of glazing from exterior.
7. Fasteners, anchors, and connection devices that are concealed from view to greatest extent possible.

C Mechanically Glazed Framing Members: Fabricate for flush glazing (without projecting stops).

D Door Frames: Reinforce as required to support loads imposed by door operation and for installing hardware.
1. At exterior doors, provide compression weather stripping at fixed stops.

E Doors: Reinforce doors as required for installing hardware.
1. At pairs of exterior doors, provide sliding weather stripping retained in adjustable strip mortised into door edge.
2. At exterior doors, provide weather sweeps applied to door bottoms.

F Hardware Installation: Factory install hardware to the greatest extent possible. Cut, drill, and tap for factory-installed hardware before applying finishes.

G After fabrication, clearly mark components to identify their locations in Project according to Shop Drawings.

2.08 ALUMINUM FINISHES

A General: Comply with NAAMM's "Metal Finishes Manual for Architectural and Metal Products" for recommendations for applying and designating finishes.

B Finish designations prefixed by AA comply with the system established by the Aluminum Association for designating aluminum finishes.

C Finish: Class II, Color Anodic Finish: AA-M12C22A41, color – Clear Anodized

PART 3 - EXECUTION

3.01 EXAMINATION

A Examine areas, with Installer present, for compliance with requirements for installation tolerances and other conditions affecting performance of Work.
1. Proceed with installation only after unsatisfactory conditions have been corrected.

3.02 INSTALLATION

A General:
1. Comply with manufacturer's written instructions.
2. Do not install damaged components.
3. Fit joints to produce hairline joints free of burrs and distortion.
4. Rigidly secure nonmovement joints.
5. Install anchors with separators and isolators to prevent metal corrosion and electrolytic deterioration.
6. Seal joints watertight, unless otherwise indicated.

B Metal Protection:
1. Where aluminum will contact dissimilar metals, protect against galvanic action by painting contact surfaces with primer or by applying sealant or tape or installing nonconductive spacers as recommended by manufacturer for this purpose.
2. Where aluminum will contact concrete or masonry, protect against corrosion by painting contact surfaces with bituminous paint.

C Install components to drain water passing joints, condensation occurring within framing members, and moisture migrating within the system to exterior.

D Set continuous sill members and flashing in full sealant bed as specified in Division 7 Section "Joint Sealants" and to produce weathertight installation.

E Install components plumb and true in alignment with established lines and grades, without warp or rack.

F Install glazing as specified in Division 8 Section "Glazing."

G Entrances: Install to produce smooth operation and tight fit at contact points.
1. Exterior Entrances: Install to produce tight fit at weather stripping and weathertight closure.
2. Field-Installed Hardware: Install surface-mounted hardware according to hardware manufacturers' written instructions using concealed fasteners to greatest extent possible.

H Install perimeter joint sealants as specified in Division 7 Section "Joint Sealants" and to produce weathertight installation.

I Erection Tolerances: Install aluminum-framed systems to comply with the following maximum tolerances:
1. Location and Plane: Limit variation from true location and plane to 1/8 inch in 12 feet (3 mm in 3.7 m); 1/4 inch (6 mm) over total length.
2. Alignment:
   a) Where surfaces abut in line, limit offset from true alignment to 1/16 inch (1.5 mm).
   b) Where surfaces meet at corners, limit offset from true alignment to 1/32 inch (0.8 mm).
3. Diagonal Measurements: Limit difference between diagonal measurements to 1/8 inch (3 mm).

3.03 FIELD QUALITY CONTROL

A Testing Agency: District will engage a qualified independent testing and inspecting agency to perform field tests and inspections and prepare test reports.

B Testing Services: Testing and inspecting of representative areas to determine compliance of installed systems with specified requirements shall take place as follows and in successive stages as indicated on Drawings. Do not proceed with installation of the next area until test results for previously completed areas show compliance with requirements.

1. Water Spray Test: Before installation of interior finishes has begun, a minimum area of 75 feet (23 m) by 1 story of aluminum-framed systems designated by Architect shall be tested according to AAMA 501.2 and shall not evidence water penetration.

C Repair or remove Work where test results and inspections indicate that it does not comply with specified requirements.

D Additional testing and inspecting, at Contractor's expense, will be performed to determine compliance of replaced or additional Work with specified requirements.

3.04 ADJUSTING

A Entrances: Adjust operating hardware for smooth operation according to hardware manufacturers' written instructions.

1. For doors accessible to people with disabilities, adjust closers to provide a 1.5-second closer sweep period for doors to move from a 70-degree open position to 3 inches (75 mm) from the latch measured to the leading door edge.

END OF SECTION

SECTION 09 67 23 - RESINOUS FLOORING & WALL SURFACES

PART 1 - GENERAL

1.1 RELATED DOCUMENTS

A. Drawings and general provisions of the Contract, including General and Supplementary Conditions and Division 01 Specification Sections, apply to this Section.

1.2 SUMMARY

A. Section includes resinous flooring systems.

1.3 PREINSTALLATION MEETINGS

A. Preinstallation Conference & mock-up: Conduct conference at Project site

1.4 ACTION SUBMITTALS

A. Product Data: For each type of product. Include manufacturer's technical data, application instructions, and recommendations for each resinous flooring component required.

B. Samples for Verification: For each resinous flooring system required, 6 inches square, applied to a rigid backing by Installer for this Project.

1.5 INFORMATIONAL SUBMITTALS

A. Installer Certificates: Signed by manufacturer certifying that installers comply with specified requirements.

B. Material Certificates: For each resinous component, from manufacturer.

C. Material Test Reports: For each resinous system, by a qualified testing agency.

1.6 CLOSEOUT SUBMITTALS

A. Maintenance Data: For resinous flooring to include in maintenance manuals.

B. Provide warranty in accordance with this specification section, in addition to the warranty and/or guarantee requirements stated elsewhere in Contract Documents including, but not limited to, Part III: Contract Documents Contract, Part IV: General Conditions, and Division 1 of technical specifications.

1.7 QUALITY ASSURANCE

A. Installer Qualifications: An authorized representative who is trained and approved by manufacturer.

B. Engage an installer who is certified in writing by resinous flooring manufacturer as qualified to apply resinous flooring systems indicated.

C. Mockups: Build mockups to verify selections made under Sample submittals and to demonstrate aesthetic effects and set quality standards for materials and execution.

1. Apply full-thickness mockups on 96-inch- square floor area selected by Architect.

a. Include 96-inch length of integral cove base with inside and outside corner.

2. Simulate finished lighting conditions for Architect's review of mockups.
3. Approval of mockups does not constitute approval of deviations from the Contract Documents contained in mockups unless Architect specifically approves such deviations in writing.
4. Subject to compliance with requirements, approved mockups may become part of the completed Work if undisturbed at time of Project Acceptance by District.

1.8 DELIVERY, STORAGE, AND HANDLING

A. Deliver materials in original packages and containers, with seals unbroken, bearing manufacturer's labels indicating brand name and directions for storage and mixing with other components.

1.9 FIELD CONDITIONS

A. Environmental Limitations: Comply with resinous flooring manufacturer's written instructions for substrate temperature, ambient temperature, moisture, ventilation, and other conditions affecting resinous flooring application.

B. Lighting: Provide permanent lighting or, if permanent lighting is not in place, simulate permanent lighting conditions during resinous flooring application.

C. Close spaces to traffic during resinous flooring application and for 24 hours after application unless manufacturer recommends a longer period.

1.10 WARRANTY

A. Provide manufacturer's written warranty in which manufacturer agrees to repair or replace resinous flooring that fails in materials or workmanship within specified warranty period of 10 years. Manufacturer may not disclaim any implied warranty such as merchantability or fitness for a particular purpose. Both the expressed and implied terms of the warranty shall be read together for the benefit of the District.

PART 2 - PRODUCTS

2.1 PERORMANCE REQUIREMENTS

A. Flammability: Self-extinguishing according to ASTM D 635.

2.2 MANUFACTURERS

A. Source Limitations: Obtain primary resinous flooring materials, including primers, resins, hardening agents, grouting coats, and topcoats, from single source from single manufacturer. Obtain secondary materials, including patching and fill material, joint sealant, and repair materials, of type and from manufacturer recommended in writing by manufacturer of primary materials.

2.3 RESINOUS FLOORING & WALL SYSTEMS

A. Resinous Flooring System: Abrasion-, impact-, and chemical-resistant, aggregate-filled, and resin-based monolithic floor surfacing designed to produce a seamless floor and integral cove base of 6” tall. Resinous wall covering where indicated.

1. Manufactured by Duraflex or approved equal.

B. System Characteristics:

1. Color and Pattern: As selected by Architect from manufacturer's full range
2. Wearing Surface: Textured for slip resistance and Smooth
3. Overall System Thickness: 1/4 inch
4. Radius ¼” at all corner conditions

C. Primer: Type recommended by resinous flooring manufacturer for substrate and resinous flooring system indicated.

D. Waterproofing Membrane: Type recommended by resinous flooring manufacturer for substrate and resinous flooring system indicated.

E. Reinforcing Membrane: Flexible resin formulation that is recommended by resinous flooring manufacturer for substrate and resinous flooring system indicated and that inhibits substrate cracks from reflecting through resinous flooring.

a. Provide fiberglass scrim embedded in reinforcing membrane.

F. Patching and Fill Material: Resinous product of or approved by resinous flooring manufacturer and recommended by manufacturer for application indicated.

G. Body Coats:
1. Resin: Epoxy
2. Formulation Description: 100 percent solids
3. Type: Clear
4. Application Method: Self-leveling slurry with broadcast aggregates
5. Number of Coats: Two
6. Thickness of Coats: 1/8 inch

7. Aggregates: Manufacturer's full range: Colored quartz, ceramic-coated silica, Vinyl flakes, Granite, or Natural silica

H. Grout Coat:
1. Resin: Epoxy
2. Formulation Description: 100 percent solids
3. Type: Clear
4. Thickness of Coat: 1/8 inch

I. Topcoats: Sealing or finish coats.
1. Resin: Urethane
2. Formulation Description: 100 percent solids
3. Type: Clear
4. Thickness of Coat: 1/8 inch
5. Finish: Gloss

J. System Physical Properties: Provide resinous flooring system with the following minimum physical property requirements when tested according to test methods indicated:

1. Compressive Strength: minimum according to ASTM C 579.
2. Tensile Strength: minimum according to ASTM C 307.
3. Flexural Modulus of Elasticity: minimum according to ASTM C 580.
4. Water Absorption: percent maximum according to ASTM C 413.
5. Shrinkage: percent maximum according to ASTM C 531.
6. Indentation: percent maximum according to MIL-D-3134J.
7. Impact Resistance: No chipping, cracking, or delamination and not more than 1/16-inch permanent indentation according to MIL-D-3134J.
8. Resistance to Elevated Temperature: No slip or flow of more than 1/16 inch according to MIL-D-3134J.
9. Abrasion Resistance: maximum weight loss according to ASTM D 4060.
10. Hardness: Shore D according to ASTM D 2240.
11. Critical Radiant Flux: 0.45 W/sq. cm or greater according to NFPA 253.

K. System Chemical Resistance: Test specimens of cured resinous flooring system are unaffected when tested according to ASTM D 1308 for 50 percent immersion in the following reagents for no fewer than (7) seven calendar days:

PART 3 - EXECUTION

3.1 PREPARATION

A. Prepare and clean substrates according to resinous flooring manufacturer's written instructions for substrate indicated. Provide clean, dry substrate for resinous flooring application.

B. Concrete Substrates: Provide sound concrete surfaces free of laitance, glaze, efflorescence, curing compounds, form-release agents, dust, dirt, grease, oil, and other contaminants incompatible with resinous flooring.

1. Roughen concrete substrates as follows:

a. Shot-blast surfaces with an apparatus that abrades the concrete surface, contains the dispensed shot within the apparatus, and recirculates the shot by vacuum pickup.

b. Comply with ASTM C 811 requirements unless manufacturer's written instructions are more stringent.

2. Repair damaged and deteriorated concrete according to resinous flooring manufacturer's written instructions.
3. Verify that concrete substrates are dry and moisture-vapor emissions are within acceptable levels according to manufacturer's written instructions.

   a. Anhydrous Calcium Chloride Test: ASTM F 1869. Proceed with application of resinous flooring only after substrates have maximum moisture-vapor-emission rate of 3 lb of water/1000 sq. ft. of slab area in 24 hours.
   b. Plastic Sheet Test: ASTM D 4263. Proceed with application only after testing indicates absence of moisture in substrates.
   c. Relative Humidity Test: Use in situ probes, ASTM F 2170. Proceed with installation only after substrates have a maximum 75 percent relative humidity level measurement.

4. Alkalinity and Adhesion Testing: Verify that concrete substrates have pH within acceptable range. Perform tests recommended by manufacturer. Proceed with application only after substrates pass testing.

C. Patching and Filling: Use patching and fill material to fill holes and depressions in substrates according to manufacturer's written instructions.

1. Control Joint Treatment: Treat control joints and other nonmoving substrate cracks to prevent cracks from reflecting through resinous flooring according to manufacturer's written instructions.

D. Resinous Materials: Mix components and prepare materials according to resinous flooring manufacturer's written instructions.

3.2 APPLICATION

A. Apply components of resinous flooring system according to manufacturer's written instructions to produce a uniform, monolithic wearing surface of thickness indicated.

1. Coordinate application of components to provide optimum adhesion of resinous flooring system to substrate, and optimum intercoat adhesion.
2. Cure resinous flooring components according to manufacturer's written instructions. Prevent contamination during application and curing processes.
3. Expansion and Isolation Joint Treatment: At substrate expansion and isolation joints, comply with resinous flooring manufacturer's written instructions.

B. Primer: Apply primer over prepared substrate at manufacturer's recommended spreading rate.

C. Waterproofing Membrane: Apply waterproofing membrane over entire substrate surface in manufacturer's recommended thickness.

1. Apply waterproofing membrane to integral cove base substrates.

D. Reinforcing Membrane: Apply reinforcing membrane to entire substrate surface.

E. Integral Cove Base: Apply cove base mix to wall surfaces before applying flooring. Apply according to manufacturer's written instructions and details, including those for taping, mixing, priming, troweling, sanding, and topcoating of cove base. Round internal and external corners.

1. Integral Cove Base: 6 inches high.

F. Self-Leveling Body Coats: Apply self-leveling slurry body coats in thickness indicated for flooring system.

1. Aggregates: Broadcast aggregates at rate recommended by manufacturer and, after resin is cured, remove excess aggregates to provide surface texture indicated.

G. Troweled or Screeded Body Coats: Apply troweled or screeded body coats in thickness indicated for flooring system. Hand or power trowel and grout to fill voids. When body coats are cured, remove trowel marks and roughness using method recommended by manufacturer.

H. Grout Coat: Apply grout coat, of type recommended by resinous flooring manufacturer, to fill voids in surface of final body coat.

I. Topcoats: Apply topcoats in number indicated for flooring system and at spreading rates recommended in writing by manufacturer and to produce wearing surface indicated.

3.3 FIELD QUALITY CONTROL

A. Material Sampling: District may, at any time and any number of times during resinous flooring application, require material samples for testing for compliance with requirements.

1. District will engage an independent testing agency to take samples of materials being used. Material samples will be taken, identified, sealed, and certified in presence of Contractor.
2. Testing agency will test samples for compliance with requirements, using applicable referenced testing procedures or, if not referenced, using testing procedures listed in manufacturer's product data.
3. If test results show applied materials do not comply with specified requirements, pay for testing, remove noncomplying materials, prepare surfaces coated with unacceptable materials, and reapply flooring materials to comply with requirements.

B. Core Sampling: At the direction of District and at locations designated by District, take one core sample per 1000 sq. ft. of resinous flooring, or portion of, to verify thickness. For each sample that fails to comply with requirements, take two additional samples. Repair damage caused by coring. Correct deficiencies in installed flooring as indicated by testing.

3.4 PROTECTION

A. Protect resinous flooring from damage and wear during the remainder of construction period. Use protective methods and materials, including temporary covering, recommended in writing by resinous flooring manufacturer.

END OF SECTION

SECTION 09 68 00 - CARPET

PART 1 - GENERAL

1.01 RELATED DOCUMENTS

A. Drawings and general provisions of the Contract, including General and Supplementary Conditions and Division 1 Specification Sections, apply to this Section.

1.02 SUMMARY

A. This Section includes the following:
   1. Woven carpet broadloom
   2. Woven carpet tile.

B. Related Sections include the following:
   1. Division 9 Section "Resilient Floor Tile" for resilient floor tile and accessories installed with carpet.
   2. Division 9 Section "Resilient Sheet Flooring" for resilient sheet flooring and accessories installed with carpet.
   3. Division 9 Section "Resilient Base and Accessories" for resilient wall base and accessories installed with carpet.

1.03 SUBMITTALS

A. Product Data: For each type of product indicated. Include manufacturer's written data on physical characteristics, durability, and fade resistance. Include installation recommendations for each type of substrate required.

B. Samples: For each of the following products and for each color and texture required. Label each Sample with manufacturer's name, material description, color, pattern, and designation indicated on Drawings and in schedules.
   1. Carpet: 12-inch-square Sample.

C. Maintenance Data: For carpet to include in maintenance manuals specified in Division 1. Include the following:
   1. Methods for maintaining carpet, including cleaning and stain-removal products and procedures and manufacturer's recommended maintenance schedule.
   2. Precautions for cleaning materials and methods that could be detrimental to carpet.

1.04 QUALITY ASSURANCE

A. Installer Qualifications: An experienced installer who is certified by the Floor Covering Installation Board or who can demonstrate compliance with its certification program requirements.

B. Fire-Test-Response Characteristics: Provide products with the critical radiant flux classification indicated in Part 2, as determined by testing identical products per ASTM E 648 by an independent testing and inspecting agency acceptable to authorities having jurisdiction.

C. Product Options: Products and manufacturers named in Part 2 establish requirements for product quality in terms of appearance, construction, and performance. Other manufacturers' products comparable in quality to named products and complying with requirements may be considered. Refer to Division 1 Section "Substitutions."

D. Carpet shall meet testing and product requirements for Carpet and Rug Institute's Green Label Plus Program. Carpet Cushion shall meet the requirements of the Carpet and Rug Institute's Green Label Program.

1.05 DELIVERY, STORAGE, AND HANDLING

A. General: Comply with CRI 104, Section 5, "Storage and Handling."

1.06 PROJECT CONDITIONS

A. General: Comply with CRI 104, Section 6.1, "Site Conditions; Temperature and Humidity."

B. Environmental Limitations: Do not install carpet until wet work in spaces is complete and dry, and ambient temperature and humidity conditions are maintained at the levels indicated for Project when occupied for its intended use.

C. Do not install carpet over concrete slabs until slabs have cured and are sufficiently dry to bond with adhesive and concrete slabs have pH range recommended by carpet manufacturer.

D. Where demountable partitions or other items are indicated for installation on top of carpet, install carpet before installing these items.

1.07 WARRANTY

A. General Warranty: Special warranty specified in this Article shall not deprive Owner of other rights Owner may have under other provisions of the Contract Documents and shall be in addition to, and run concurrent with, other warranties made by Contractor under requirements of the Contract Documents.

B. Special Carpet Warranty: Written warranty, signed by carpet manufacturer agreeing to replace carpet that does not comply with requirements or that fails within specified warranty period. Warranty does not include deterioration or failure of carpet due to unusual traffic, failure of substrate, vandalism, or abuse. Failures include, but are not limited to, more than 10 percent loss of face fiber, edge raveling, snags, runs, and delamination.
   1. Warranty Period: 10 years from date of Substantial Completion.

1.08 EXTRA MATERIALS

A. Furnish extra materials described below, before installation begins, that match products installed and that are packaged with protective covering for storage and identified with labels describing contents.
   1. Carpet: Full-width rolls equal to 5 percent of amount installed for each type indicated, but not less than 10 sq. yd.

PART 2 - PRODUCTS

2.01 WOVEN CARPET TILES

A. Available Product: Subject to compliance with requirements, products that may be incorporated into the Work include, but are not limited to, the following:
   a) J&J Carpet, City Blocks 2 Modular, or approved equal.

2.02 INSTALLATION ACCESSORIES

A. Trowelable Leveling and Patching Compounds: Latex-modified, hydraulic-cement-based formulation provided by or recommended by the following:
   1. Carpet manufacturer.

B. Adhesives: Water-resistant, mildew-resistant, non-staining type to suit products and subfloor conditions indicated, that complies with flammability requirements for installed carpet and that is recommended by the following:
   1. Carpet manufacturer.

C. Seaming Cement: Hot-melt adhesive tape or similar product recommended by carpet manufacturer for taping seams and butting cut edges at backing to form secure seams and to prevent pile loss at seams.

D. Metal Edge Strips: Extruded aluminum with mill finish of width shown, of height required to protect exposed edge of carpet, and of maximum lengths to minimize running joints.

E. Barrier Coat: per manufacturer’s recommendations or approved equal per manufacture’s instructions.

PART 3 - EXECUTION

3.01 EXAMINATION

A. Examine substrates, areas, and conditions for compliance with requirements for maximum moisture content, alkalinity range, installation tolerances, and other conditions affecting carpet performance. Verify that substrates and conditions are satisfactory for carpet installation and comply with requirements specified.

B. Concrete Subfloors: Verify that concrete slabs comply with ASTM F 710 and the following:
   1. Slab substrates are dry and free of curing compounds, sealers, hardeners, and other materials that may interfere with adhesive bond. Determine adhesion and dryness characteristics by performing bond and moisture tests recommended by the following:
      a) Carpet manufacturer.
   2. Subfloor finishes comply with requirements specified in Division 3 Section "Cast-in-Place Concrete" for slabs receiving carpet.
   3. Subfloors are free of cracks, ridges, depressions, scale, and foreign deposits.

C. Proceed with installation only after unsatisfactory conditions have been corrected.

3.02 PREPARATION

A. General: Comply with CRI 104, Section 6.2, "Site Conditions; Floor Preparation," and carpet manufacturer's written installation instructions for preparing substrates indicated to receive carpet installation.

B. Use trowelable leveling and patching compounds, as required, according to manufacturer's written instructions, to fill cracks, holes, and depressions in substrates for proper installation of flooring material.

C. Remove coatings, including curing compounds, and other substances that are incompatible with adhesives and that contain soap, wax, oil, or silicone, without using solvents. Use mechanical methods recommended in writing by the following:
   1. Carpet manufacturer.

D. Broom and vacuum clean substrates to be covered immediately before installing carpet. After cleaning, examine substrates for moisture, alkaline salts, carbonation, or dust. Proceed with installation only after unsatisfactory conditions have been corrected.

3.03 INSTALLATION

A. Direct-Glue-Down Installation: Comply with CRI 104, Section 8, "Direct Glue-Down Installation."

B. Moisture Testing:
   a) Perform anhydrous calcium chloride test, ASTM F 1869. Proceed with installation only after substrates have maximum moisture-vapor-emission rate of 3 lb of water/1000 sq. ft. in 24 hours.
   b) Perform tests recommended by manufacturer and submit test results to Architect. Proceed with installation only after substrates pass testing.
   c) In the event that moisture vapor emissions exceed 3lbs./1000 sq. ft./24 hrs., the Contractor, at his expense, shall install a barrier coat and moisture sealer, “per manufacturer’s recommendations. Contractor shall apply two coats per manufacturer’s instructions, prior to installation of the flooring material.

C. Comply with carpet manufacturer's written recommendations for seam locations and direction of carpet; maintain uniformity of carpet direction and lay of pile. At doorways, center seams under the door in closed position.
   1. Bevel adjoining border edges at seams with hand shears.
   2. Level adjoining border edges.

D. Do not bridge building expansion joints with carpet.

E. Cut and fit carpet to butt tightly to vertical surfaces, permanent fixtures, and built-in furniture including cabinets, pipes, outlets, edgings, thresholds, and nosings. Bind or seal cut edges as recommended by carpet manufacturer.

F. Extend carpet into toe spaces, door reveals, closets, open-bottomed obstructions, removable flanges, alcoves, and similar openings.

G. Maintain reference markers, holes, and openings that are in place or marked for future cutting by repeating on finish flooring as marked on subfloor. Use nonpermanent, non-staining marking device.

H. Install pattern parallel to walls and borders.

3.04 CLEANING AND PROTECTION

A. Perform the following operations immediately after installing carpet:
   1. Remove excess adhesive, seam sealer, and other surface blemishes using cleaner recommended by carpet manufacturer.
   2. Remove yarns that protrude from carpet surface.
   3. Vacuum carpet using commercial machine with face-beater element.

SECTION 09 77 20 – DECORATIVE FIBERGLASS REINFORCED WALL PANELS

PART 1 - GENERAL

1.1 SUMMARY

A. Section Includes: Prefinished polyester glass reinforced plastic sheets and adhered to unfinished gypsum wallboard.
   1. Aluminum trim.

B. Products Not Furnished or Installed under This Section:
   1. Gypsum substrate board.
   2. Resilient Base.

1.2 REFERENCES

A. American Society for Testing and Materials: Standard Specifications (ASTM)
   1. ASTM D 256 - Izod Impact Strengths (ft #/in)
   2. ASTM D 570 - Water Absorption (%)
   3. ASTM D 638 - Tensile Strengths (psi) & Tensile Modulus (psi)
   4. ASTM D 790 - Flexural Strengths (psi) & Flexural Modulus (psi)
   5. ASTM D 2583- Barcol Hardness
   6. ASTM D 5319 - Standard Specification for Glass-Fiber Reinforced Polyester Wall and Ceiling Panels.
   7. ASTM E 84 - Standard Test Method for Surface Burning Characteristics of Building Materials.

1.3 SUBMITTALS

A. Product Data: Submit sufficient manufacturer's data to indicate compliance with these specifications, including:
   1. Preparation instructions and recommendations.
   2. Storage and handling requirements and recommendations.
   3. Installation methods.

B. Shop Drawings: Submit elevations of each wall showing location of paneling and trim members with respect to all discontinuities in the wall elevation.

C. Selection Samples: Submit manufacturer’s standard color pattern selection samples representing manufacturer's full range of available colors and patterns.

D. Samples for Verification: Submit appropriate section of panel for each finish selected indicating the color, texture, and pattern required.
   1. Submit complete with specified applied finish.
   2. For selected patterns show complete pattern repeat.
   3. Exposed Molding and Trim: Provide samples of each type, finish, and color.

E. Manufacturers Material Safety Data Sheets (MSDS) for adhesives, sealants and other pertinent materials prior to their delivery to the site (available as downloads for most Marlite’s products at http://www.marlite.com/tech-details.aspx or by contacting Marlite at info@marlite.com).

1.4 QUALITY ASSURANCE

A. Conform to building code requirements for interior finish for smoke and flame spread requirements as tested in accordance with:
   1. ASTM E 84 (Method of test for surface burning characteristics of building Materials)
      a. Wall Required Rating – Class A

B. Sanitary Standards: System components and finishes to comply with:
   1. United States Department of Agriculture (USDA) / Food Safety & Inspection Services (FSIS) requirements for food preparation facilities, incidental contact.
   2. Food and Drug Administration (FDA) 2013 Food Code 6-101.11.

1.5 DELIVERY, STORAGE AND HANDLING

A. Deliver materials factory packaged on strong pallets.

B. Store panels and trim lying flat, under cover and protected from the elements. Allow panels to acclimate to room temperature (range of 60 to 75°F) for 48 hours prior to installation.

1.6 PROJECT CONDITIONS

A. Environmental Limitations: Building are to be fully enclosed prior to installation with sufficient heat (70°) and ventilation consistent with good working conditions for finish work

B. During installation and for not less than 48 hours before, maintain an ambient temperature and relative humidity within limits required by type of adhesive used and recommendation of adhesive manufacturer.
   1. Provide ventilation to disperse fumes during application of adhesive as recommended by the adhesive manufacturer.

C. SOURCE MATERIALS
   1. All materials of the same color or pattern shall be from the same manufacturing and dye lot.

1.7 WARRANTY

A. Furnish one-year guarantee against defects in material and workmanship.

PART 2 - PRODUCTS

2.1 ACCEPTABLE MANUFACTURER

A. Marlite; 1 Marlite Drive, Dover, OH 44622. 800-377-1221 FAX (330) 343-4668 Email: info@marlite.com www.marlite.com.

B. Product:
   1. Induro™ FRP

2.2 PANELS

A. Fiberglass reinforced thermosetting polyester resin panel sheets complying with ASTM D 5319.
1. Dimensions:
   a. Thickness – 0.090 “ (2.29mm) nominal
   b. Width - 4'-0” (1.22m) nominal
   c. Length –10’-0” (2.4m) nominal
2. Tolerance:
   a. Length and Width: +/-1/8 “ (3.175mm)
   b. Square - Not to exceed 1/8 “ for 8 foot (2.4m) panels or 5/32 “ (3.96mm) for 10 foot (2.4m) panels

B. Properties for Induro FRP: Resistant to rot, corrosion, denting, peeling, and splintering.
1. Flexural Strength - 1.7 x 10^4 psi per ASTM D 790.
2. Flexural Modulus – 6.0 x 10^5 psi per ASTM D 790.
3. Tensile Strength – 8.0 x 10^3 psi per ASTM D 638.
4. Tensile Modulus – 9.43 x 10^3 psi per ASTM D 638.
5. Water Absorption - 0.17% per ASTM D 570.
6. Barcol Hardness (scratch resistance) 22 - per ASTM D 2583.
7. Izod Impact Strength – 7.0 ft. lbs./in ASTM D 256.
8. Mold & Mildew – pass per ASTM D 3273.

C. Back Surface: Smooth. Imperfections which do not affect functional properties are not cause for rejection.

D. Front Finish: Strata.

a. Color: From Manufacturer’s full range.

b. Surface Marlite Induro FRP: Smooth surface texture.

c. Fire Rating: Class A (I) Fire Rating

d. Size:

1) Marlite Induro FRP

a) 48” x 120” [1.2m x 3m] x .090” (3mm) nom.

2.3 BASE

A. Marlite Base Molding for 0.090” (2.29mm) thick FRP Panels
1. Color: As selected by architect.
2. Profiles:
   a. M 612 FRP Base Molding, 10’ length
   b. M 651 Inside Corner
   c. M 660 Outside Corner
   d. M 620 LH End Cap
   e. M 625 RH End Cap

2.4 MOLDINGS

A. Aluminum Anodized Trim: Heavy weight extruded aluminum 6063-T5 alloy prefinished at the factory.
1. Profiles :
   a. F 550 Inside Corner, 8’ length

b. F 561 Outside Corner, 8’ length
c. F 565 Division, 8’ length
d. F566 Ribbed Designer Division, 8’ length
e. F567 Radius Designer Division, 8’ length
f. F568 Square Channel Designer Division, 8’ length
g. F 570 Edge, 8’ length
h. Color: Brite Satin Anodized

B. Outside Corner Guard:
1. F 560SS Stainless Corner Guard, 8’ length
2. Finish: #4 brushed satin

2.5 ACCESSORIES

A. Adhesive: Either of the following construction adhesives complying with ASTM C 557.
1. Marlite C-551 FRP Adhesive - Water- resistant, non-flammable adhesive.
2. Marlite C-915 Construction Adhesive - Flexible, water-resistant, solvent based adhesive, formulated for fast, easy application.
3. Titebond Advanced Polymer Panel Adhesive – VOC compliant, non-flammable, environmentally safe adhesive.

B. Sealant:
1. Marlite Brand MS-250 Clear Silicone Sealant.

PART 3 - EXECUTION

3.1 PREPARATION

A. Examine backup surfaces to determine that corners are plumb and straight, surfaces are smooth, uniform, clean and free from foreign matter, nails countersunk, joints and cracks filled flush and smooth with the adjoining surface.
1. Verify that stud spacing does not exceed 24” (61cm) on-center.

B. Repair defects prior to installation.
1. Level wall surfaces to panel manufacturer’s requirements. Remove protrusions and fill indentations.

3.2 INSTALLATION

A. Comply with manufacturer's recommended procedures and installation sequence.

B. Cut sheets to meet supports allowing 1/8” (3 mm) clearance for every 8 foot (2.4m) of panel.
1. Cut and drill with carbide tipped saw blades or drill bits, or cut with shears.
2. Provide physical samples and mock up prior to insallation.

C. Apply panels to board substrate, above base, vertically oriented with seams plumb and pattern aligned with adjoining panels.
1. Install panels with manufacturer's recommended gap for panel field and corner joints.
a. Adhesive trowel and application method to conform to adhesive manufacturer’s recommendations.

D. Apply panel moldings to all panel edges using silicone sealant providing for required clearances.
   1. All moldings must provide for a minimum 1/8 “ (3mm) of panel expansion at joints and edges, to insure proper installation.
   2. Apply sealant to all moldings, channels and joints between the system and different materials to assure watertight installation.

3.3 CLEANING

A. Remove excess sealant from panels and moldings. Wipe panel down using a damp cloth and mild soap solution or cleaner.

B. Refer to manufacturer's specific cleaning recommendations Do not use abrasive cleaners.

END OF SECTION

SECTION 10 50 30 TURNOUT GEAR LOCKERS

PART 1 GENERAL

1.1 SECTION INCLUDES

A. Design, fabrication and installation of wall mounted turnout gear lockers as specified herein.

1.2 RELATED SECTIONS

A. Division 00 Section “ARRA Grant Requirements” for “The Buy American Act” requirements as applicable.
B. Section 10: Metal Lockers.
C. Sections of Division 16: electrical as applicable.

1.3 SUBMITTALS

A. Product Data: Submit manufacturer’s product data and installation instructions.
B. Shop Drawings: Submit manufacturer’s shop drawings for each individual run of lockers.
C. Samples: Submit manufacturer’s standard color samples.
D. Owner’s Manual: Provide maintenance manual at closeout.
E. Warranty: Submit manufacturer’s standard warranty.

1.4 QUALITY ASSURANCE

A. Manufacturer shall have a minimum of fifteen years experience in the direct manufacture of lockers.
B. Installer Qualifications: Installer shall have experience necessary to assure lockers are installed properly and according to manufacturer’s instructions.
C. Reference:
1. ASTM A513 – Minimum properties of Electric-Resistance-Welded Carbon Allow Steel Mechanical Tubing
2. ASTM A510 – Minimum properties of Wire Rods and Coarse Round Wire, Carbon Steel and Alloy Steel

1.5 DELIVERY, STORAGE AND HANDLING

A. Delivery: Deliver materials to site in manufacturer’s original, unopened containers with labels identifying product and manufacturer’s name.
B. Storage: Store materials in a clean dry area.
C. Handling: Protect materials and finish during installation and handling to prevent damage.

PART 2 PRODUCTS

2.1 MANUFACTURER

A. Acceptable Manufacturers: Subject to compliance with requirements of the contract documents, acceptable manufacturer’s are as follows:

1. GearGrid Corporation, 670 SW 15th Street, Forest Lake, MN 55025. Toll-free 888-643-6694. Phone 651-464-4468. Fax 651-464-4780. Web site www.geargrid.com. Email sales@geargrid.com., or approved equal.

2. Contractor shall provide and install corresponding free-standing turn-out gear lockers for the center portion of the turnout room. All selected accessories shall remain the same.

2.2 TURNOUT GEAR LOCKER FABRICATION

A. Lockers must be fabricated and manufactured in the U.S.A. Products not manufactured in the U.S.A will be rejected at the time of submittals.
B. Model: GEARGRID Wall Mounted Storage System.
C. Locker Sizes: (Please reference project drawings for indicated sizes)
1. Super Jumbo 24”: Overall dimension- 74.5” high x 25.25” wide x 24” deep.
a) Clear Opening Width: 22.75”

D. Construction: Units shall be welded at all applicable joints. Forming of metal shall be completed by standard cold-forming operations. Use of fasteners will only be required to allow for knock-down shipping, securing units to mounting surface and on applicable accessories.

E. Vertical Dividers:
1. Outer Frames: 1.25” O.D. x 16 gauge wall thickness ASTM A513 steel tubing.
2. Inner Grid: .25” diameter ASTM 510 cold drawn steel wire resistance welded to a 3” square pattern.
3. Inner Grid wires must be full length and width of inside vertical divider frame. Wires not running full length or width, thus creating exposed wire ends will not be acceptable.
4. Inner Grid wires must run horizontally and vertically creating a square or rectangular grid pattern only. Grid wires not creating a square or rectangular grid pattern will not be acceptable.
5. Inner Grid wires shall intersect and cross all perpendicular wires, and shall be welded at all intersections.

F. Back Panel:
1. Required on each locker to protect the locker contents and wall substrate, as well as provide an additional panel for accessory attachment.
2. Grid: .25” diameter ASTM 510 cold drawn steel wire resistance welded to a 3” square pattern.
3. Back panel must engage and be secured to vertical dividers via horizontal wires which extend into mounting holes pre-drilled in vertical dividers. Back panels are sandwiched between vertical dividers, preventing them from being removed after assembly is complete.
4. Inner Grid wires must be full length and width of inside vertical divider frame. Wires not running full length or width, thus creating exposed wire ends will not be acceptable.
6. Inner Grid wires must run horizontally and vertically creating a square or rectangular grid pattern only. Grid wires not creating a square or rectangular grid pattern will not be acceptable.
5. Inner Grid wires shall intersect and cross all perpendicular wires, and shall be welded at all intersections.

G. Shelves: (1) Upper, (1) Lower. .25” diameter ASTM 510 cold drawn steel wire resistance welded and cold formed. Upper shelf shall include an integrated 20 gauge steel bracket to

accept a 2” x 16” name placard, unless doors are selected as an option, in which case the name placard will be integrated into the door.

H. Apparel Hooks: (3) per locker opening. .192” diameter ASTM 510 cold drawn steel wire resistance welded, cold formed and powder coated. Apparel hooks must securely engage and snap onto side or back grid, to prevent unintentional disengagement of hook.

2.3 ACCESSORIES

A. Door
1. Frame: 1.25” O.D. x 16 gauge wall thickness ASTM A513 steel tubing.
2. Inner Grid: .25” diameter ASTM 510 cold drawn steel wire resistance welded to a 3” square pattern.
3. Inner Grid wires must be full length and width of inside vertical divider frame. Wires not running full length or width, thus creating exposed wire ends will not be acceptable.
4. Inner Grid wires shall intersect and cross all perpendicular wires, and shall be welded at all intersections
5. Top Cover: .25” diameter ASTM 510 cold drawn steel wire resistance welded to a 3” square pattern. To securely enclose the top of the locker. Top cover must engage and be secured to vertical dividers via horizontal wires which extend into mounting holes pre-drilled in vertical dividers. Top Covers are sandwiched between vertical dividers, preventing them from being removed after assembly is complete.
6. Hinge: Single pin welded style with brass pivot bushing. Door and Vertical Divider hinge components must be welded and not mechanically fastened.
7. Placard Channel: 20 gauge steel to accept a 2” x 12” name placard, securely welded to inner grid panel
8. Latch/Hasp: Self-latching with padlock hasp, constructed as follows; Vertical Divider side latch shall be minimum .125 in. sheet steel welded to Vertical Divider frame. Door side latch shall be constructed of .125 in. sheet steel and .1875 in. wire. Latch components manufactured from formed wire will not be acceptable. Lock by owner.

B. Hang Bar
1. Hang Bars must be manufactured to allow each locker user to install at their desired height. Hang Bars that span multiple locker openings are not acceptable.
2. Tube: 1.25”O.D. x 16 gauge 304 stainless steel tubing.
3. Brackets: Allow Hang Bars to be securely attached to each vertical divider, powder coated.

C. Heavy Hanger
1. .25” diameter 304 stainless steel wire cold formed and resistance welded.
2. Black vinyl coating on hook end.

D. Gear Dryer Hanger
1. .25” diameter 304 stainless steel wire cold formed and resistance welded. Includes formed loops to prop open sleeves on jackets to promote better circulation throughout the garment.
2. Black vinyl coating on hook end.

E. Glove Drying Hanger
1. .25” diameter 304 stainless steel wire cold formed and resistance welded.
2. Black vinyl coating on hook end.

I. Top Side Storage
1. Shelf spanning across the top of the lockers for additional gear storage above lockers. .25” diameter ASTM 510 cold drawn steel wire resistance welded to a 3” square pattern. Powder coated finish in specified color.

2.4 FINISH
A. General: All system components excluding assembly and mounting hardware and stainless steel components are to receive the standard finish.
B. Standard Finish: Components to be cleaned using a phosphatized bath, clear water rinse and electro-statically coated with a durable and UV-stable TGIC powder coating process. Thickness of applied finish shall be 3 – 4 mm for added protection.
C. Color: As Selected from Manufacturer’s full range

PART 3 EXECUTION

3.1 EXAMINATION

A. Examine area to receive lockers. Notify architect if area are not acceptable. Do not begin installation until unacceptable conditions have been corrected.

3.2 INSTALLATION

A. Install lockers in accordance with manufacturer’s instructions.
B. Use manufacturer’s hardware for assembly.
C. Anchor to mounting surface with proper hardware.

END OF SECTION

SECTION 21 13 13 – WET PIPE SPRINKLER SYSTEMS

PART 1 - GENERAL

1.01 RELATED DOCUMENTS

A. The requirements of the General Conditions, Supplementary Conditions, Special Conditions and Division 1 Requirements, apply to the Work of this section

B. All Division 21 Sections.

1.02 SUMMARY

A. General: Furnish and install all engineering, design, materials, tools, equipment and perform all labor necessary for the complete installation of a fire sprinkler system and related items to provide complete functional systems in accordance with the requirements of National Fire Protection Agency 13 and the 2019 California Building Code, in all areas of the building.

B. Each system to include, but not limited to:
   1. All pipe, fittings, sprinklers, hangers, valves, braces and all other accessories as necessary or required for a complete and operational system complying with all applicable codes.
   2. The Contractor is responsible for securing approval from all agencies before submitting to the architect's office.
   3. System design criteria and water supply information shall be obtained from City Fire Marshal prior to bid. The Contractor shall perform a water flow test at the nearest fire hydrant prior to commencing design of the fire sprinkler system.
   4. Provide a fire sprinkler head at the top of each elevator shaft per NFPA. Provide fire-rated-, spring-loaded 2'x2' access panel within code-required maximum distance from sprinkler head.
   5. Contractor shall provide seismic isolation at all building seismic joints. See 21 05 48.

1.03 QUALITY ASSURANCE

A. Standards: The system shall conform to the requirements of the National Fire Protection Association Standards for the Installation of Sprinkler Systems (NFPA 13, and 20). Provide coverage for various hazards in accordance with NFPA and local Fire Department requirements.

B. The system may be a "scheduled" pipe sized system or "calculated" pipe sized system that satisfies the 2016 California Building Code, NFPA - 13 requirements. Details and computations for calculated systems must be submitted for approval. Pipe sizes shown outside buildings and for risers are minimum regardless of hydraulic calculations.

C. Qualifications of Installers: A firm licensed to engineer and install fire protection systems such as that specified herein shall perform this Work; the installing firm must also be regularly and currently engaged in the installation of such systems.

PART 2 - PRODUCTS

2.01 GENERAL

A. All materials and equipment shall be new and of latest design of the manufacturer and shall be tested and approved by the Underwriters Laboratories, Inc. and Factory Mutual.

B. Sprinkler heads:
   1. Unfinished Areas: Sprinkler heads shall be upright automatic spray type of ordinary degree temperature rating. Sprinkler heads installed in the vicinity of heat producing equipment shall be of the temperature rating required by the NFPA.

2. Finished Areas: In finished ceiling areas, the sprinkler heads shall be an automatic spray type of ordinary degree temperature rating. Sprinkler heads shall be quick response type and have flush assembly plate cover. Color to match the ceiling. Contractor shall assume four (4) separate ceiling colors. Exterior sprinkler heads shall have a chrome assembly plate cover.

3. Sprinkler heads shall be located symmetrically with respect to ceiling tiles, patterns within ceiling tiles, lighting fixtures and air diffusers.

4. Contractor shall furnish four (4) spare heads, packed in a suitable container. Heads shall be representative, and in proportion to the number of each type and temperature rated heads installed. In addition, furnish not less than two (2) special sprinkler head wrenches. Furnish spare sprinkler heads placed in an emergency cabinet. For each cabinet provide one sprinkler wrench. The cabinet will be of No. 20 gauge pressure steel with red lacquer finish complete with manufacturer standard labeling. The spare heads shall be representative of, and in proportion to, the number of each type and temperature of heads installed. Locate cabinet where shown on plans or as directed by District.

2.02 PIPE AND FITTINGS

A. Pipe fittings for installation below ground shall be, cast iron conforming to the requirements of American Water Works Association Standard Specification for cast iron special castings, Class D, 150 lb., American Water Works Association C151 mechanical or push-on joint; with American Water Works Association C104 cement-mortar lining, "Blue Brut" or Polyvinyl Chloride pressure pipe American Water Works Association C900, UL approved for fire line service. If Polyvinyl Chloride (PVC) permastran pipe is used with mechanical joint fittings, install according to manufacturer's requirements and recommendations.

B. Fire sprinkler piping, base of riser to 5’-0” outside building (Below ground):

C. Pipe: Acceptable piping materials are Class 50 cement-lined ductile iron with a working pressure of 250 psi per NFPA 24. All piping shall be listed for fire protection service.

D. Fittings: Fittings shall be rated to a minimum of 250 psi and meet applicable requirements of ANSI/AWWA and NFPA 24.

E. Materials shall comply with NFPA / ANSI & AWWA

F. The flange and spigot piece at the base of the riser shall be secured to the underground elbow at the base of the riser with four ¾" stainless steel tie rods for 8” risers, and two ¾" rods for 6” risers (for underground supply piping).

G. Pipe for installation above ground shall conform to ASTM A 795, A 53, or A135. Thin wall pipe with Victaulic couplings may be used for fire lines 2" and larger. Piping for line sizes 1½" and smaller shall be Schedule 40 pipe with screwed fittings. No thin wall pipe shall be used in conjunction with screwed fittings.

H. Gate valves shall be approved rising stem type (OS&Y).

I. Underground valve box shall be "Brooks or "Christy" marked for service.

J. All exposed valves shall be chained to prevent accidental shutting of the valves.

K. Sprinkler riser assemblies shall comply with all applicable codes. Furnish dry pipe valve and air compressor for all dry pipe systems. Provide insulation and heat tracing for riser freeze protection. All shut off valves shall be equipped with tamper switches.

L. Supports, Anchors, Bracing – See All Sections 21 05 29 and 21 05 48.

M. Piping Penetration Auxiliaries: Conform to NFPA 13 and the following:

N. Sleeves: Pipe Shields Inc., Model WFB, galvanized steel.

O. Plates/Collars: 24-gauge galvanized sheet metal. Escutcheons: Polished chrome plated brass or painted metal.

2.03 FIRE ALARM

A. Alarm Bell: Furnish and install UL listed, exterior and interior Fire Alarm Bells in a location approved by the architect.

2.04 ACCESSORIES

A. Underground Pipe & Fittings

1) This Contractor shall furnish and install all underground pipe, fittings, valves, rods, clamps, etc. as required for a complete approved underground fire protection system.

2) All underground pipe and fittings shall be approved Johns-Manville C900 Bluebrute. Joints shall be ring-tight or mechanical joints.

3) All underground pipe and fittings shall be anchored in accordance with the NFPA recommendations at all changes in direction and elsewhere as required.

4) All underground pipe outside the building shall be installed with not less than the minimum cover as recommended by NFPA. Where necessary to avoid other underground services, pipe shall be offset down to maintain the minimum cover.

B. Post Indicating Valves

1) Furnish and install Post Indicating Valves for the Automatic Sprinkler Risers, as required. Post Indicator Valves shall have a glass-covered indicator and tamper switches.

C. Automatic Sprinkler Risers & Alarm Check Valves

1) Furnish Automatic Sprinkler Riser as required for the building.

2) In each Automatic Sprinkler Riser provide an approved alarm check valve complete with all trimmings required by NFPA. Furnish a 2-pole electric flow switch and a local alarm gong. The second pole of switch will be utilized by the owner for the centrally located building protection alarm system.

D. Portable Fire Extinguishers

1) Portable Fire Extinguishers of type and quantities required by the NFPA and locations as indicated on the drawings.

E. Siamese Pumper Connection

1) Furnish a Siamese Pumper Connection where required.

2.05 SYSTEM TYPE

A. The fire protection system for this building shall be “WET” system, in accordance with NFPA 13 requirements.

B. All heads exposed to freezing conditions shall be dry pendant type heads. All piping shall be run inside building lines on the warm side of the building insulation.

PART 3 - EXECUTION

3.01 INSTALLATION

A. General
1. Install all work in accordance with requirements of NFPA 13 and the Fire Marshal. Notify the Fire Marshal in a timely manner when the installation progressed for required inspections.
2. Coordinate the installation of this Work with adjacent or related work under other sections of the specifications. Any installed fire sprinkler Work which interferes with other work or fails to meet the requirements of the Fire Marshal (as determined by progress or final observation) will be rejected and shall be removed, replaced, or revised to an acceptable condition at the contractor's expense.
3. Fire sprinkler, lines routed outside of the building insulation in soffits, overhangs, under canopies, or in ventilated un-insulated attics shall be protected by a “dry” compressed air charged or anti-freeze system.
4. Coordinate and install the Work of this Section with related or adjacent work specified under other sections of the specifications.
5. System piping volume shall be capable of achieving water delivery to the inspector’s test pipe in less than sixty seconds, starting at the normal air pressure on the system and with any quick opening devices in operation.
6. Cutting, Notching and Patching:
7. Unless noted otherwise on Drawings, provide all cutting and notching required for work of this Section, including concrete saw cutting and core drilling; obtain Architect's approval before cutting or core drilling.
8. Provide all patching required for work of this Section, including concrete replacement; patch to match adjacent Work and to Architect's satisfaction.
9. Any fire sprinkler pipe located outside of the buildings shall be protected with heat tape.

B. Piping
1. Above-grade piping
2. Use no coupling except where length of pipe between fittings exceeds 20 feet.
3. Make reductions in pipe sizes with one piece reducing fitting. Bushings shall not be acceptable, except when standard fittings of proper size are not manufactured. Single bushings of the face type will be permitted up to 5% of total number of reducing fittings in the system. Where bushings are used, install with outer face flush with face of fitting opening being reduced.
4. Install piping to clear lighting fixtures, air ducts, and other obstructions, minimum clearance 2 inches including concrete foundations, walls, and floors.
5. All sprinkler piping shall be inspected prior to installation to ensure the pipe is free of welding slag and cutouts, and ensure that the welded fittings do not protrude into the path of water flow.
6. Install piping level, plumb, and parallel to structure line except where shown otherwise or required by function or regulation to be angled or sloped.
7. Install piping concealed within penetrations provided in the structure except where shown as exposed.
8. Install piping without bending, springing, forcing, or placing undue stress on the pipe or fittings.
9. Install piping to allow for expansion, contraction, and structural settlement.
10. Install piping so it does not directly contact the structure except where shown or specified otherwise.
11. Install piping so that it does not interfere with equipment access.
12. The use of plain end pipe, fittings and coupling shall not be permitted, except for welded piping.
13. Penetrations through fire rated walls shall be sealed in accordance with a recognized UL/FM assembly.

C. Below grade piping
1. Piping installed under slab shall be cement lined cast iron, PVC or other plastic pressure piping shall not be allowed.

2. Install per NFPA 24 and NFPA 13 and local jurisdiction.
3. The flange and spigot piece at the base of the risers shall be secured to the underground elbow at the base of the riser with four ¾" stainless steel tie rods for 8" risers, and two ¾" rods for 6" and smaller risers.
4. Install thrust blocks at all changes in direction sized in accordance with Factory Mutual Data Sheet 3-10.
5. Pipe supports – See Sections 21 05 29 and 21 05 48.
6. Provide 2" clear space around all pipe penetrations passing through concrete foundations, walls or floors.

D. Drains
1. Install auxiliary drains at all low points in the system. Install the inspector's test drain at most remote high point in each system from the main riser. All inspectors' test connections shall be installed in a readily accessible location. Use angle type drain valves. Five or fewer trapped heads may be drained through a plugged fitting. Pipe drain valves shall discharge as shown on the drawings, and as approved by the Architect, outside building unless noted otherwise. Install in accordance with NFPA 13.
2. All piping in finished areas must be run concealed above ceilings, in walls or as shown and noted on the plans. Piping shall be run so as to occur on the warm side of all building insulation. The location of exposed piping, if permitted at all, shall be approved by the engineer and architect.

3.02 SPRINKLER HEAD LOCATIONS

A. Sprinkler heads shall be located in finished ceilings, soffits, overhang or similar, in accordance with NFPA and UBC requirements but conforming to ceiling lighting, and building modules which may require additional heads for symmetry.

B. Sprinkler heads in the areas without ceilings shall be located on exposed piping run to conform to building lines and as approved by the Architect, unless otherwise noted. The location of all piping, heads and equipment shall be submitted for final approval by the Architect who shall have final authority of location of same. The contractor shall allow for additional sprinkler heads which may be required for aesthetic purposes.

C. Heads in exterior walls and exterior soffits shall be located as shown on Architectural exterior elevations or as approved by the architect.

3.03 COORDINATION

A. The Contractor shall be responsible to coordinate the location of sprinkler piping with all other trades such as ductwork, electrical Work and plumbing Work. The Contractor shall off-set and modify the sprinkler system as may be required to coordinate the sprinkler system with all other systems as shown and/or detailed. All sprinkler piping shall clear all other building services by at least 2 inches.

3.04 REPORTS

A. The system(s) must be inspected, tested, and approved and certified by the City's insurance carrier, and local fire department before acceptance of the Project.

3.05 DETECTION, ALARM, AND ELECTRICAL WIRING

A. Contractor shall be responsible for all fire detection and alarm and wiring.

B. Demonstrate proper operation of alarm systems.

C. Contractor shall provide all electrical wiring.

END OF SECTION

SECTION 28 31 00 – FIRE ALARM SYSTEM

PART 1 - GENERAL

1.01 SUMMARY

A. Section includes

1. Furnish and install low voltage automatic fire detection systems as shown on Drawings and/or specified herein, together with all miscellaneous items of labor, engineering, design and materials necessary for proper operation, testing and control of system for complete and operating systems. Any omission in specified equipment will not relieve the Contractor of the responsibility for furnishing fully operational systems.
2. Refer to Drawing Sheet E4.0 for scope of work. Contractor is responsible to obtain permit and request inspections as well as pay all associated fees.

B. Related work under this section

1. Where items specified in other Division 26 sections conflict with the requirements of this Section, the most stringent requirement shall govern.
    a. 26 05 26 – Grounding and Bonding for Communications
    b. 26 05 33 – Raceway and Boxes
2. The requirements of this Section apply to all Division 26 work, as applicable.
3. Consult all other sections, determine the extent and character of related work and properly coordinate work specified herein with that specified elsewhere to produce a complete installation.
4. Items specified under another Division with connections specified under this Section:
    a. Fire sprinkler alarm system flow switches, valve monitors and post indicating valves.

1.02 REFERENCES

A. Comply with the latest edition of the following applicable specifications and standards except as otherwise shown or specified:

1. California Codes of Regulations
    a. Part 2 -California Building Code (CBC); International Building Code (IBC) with California amendments
    b. Part 3 -California Electrical Code(CEC); NFPA 70 National Electrical Code (NEC) with California amendments
    c. Part 4 -California Mechanical Code (MEC); IAPMO Uniform Mechanical Code (UMC) with California amendments
    d. Part 7 -California Elevator Safety Construction Code
    e. Part 9 -California Fire Code; International Fire Code (IFC) with California amendments
2. NECA –National Electrical Contractors Association

a. 305; Standard for Fire Alarm System Job Practices

3. NFPA –National Fire Protection Association
   a. 13; Sprinkler Alarm and Supervision
   b. 72; National Fire Alarm Code
   c. 90A; Installation of Air Conditioning & Ventilating Systems
   d. 101; Life Safety Code
4. UL -Underwriter's Laboratories, Inc.
   a. 38; Standard for Manual Signaling Boxes for Fire Alarm Systems
   b. 228; Door Holders for Fire Protective Signal Systems
   c. 268; Standard for Smoke Detectors for Fire Alarm Signaling Systems
   d. 268A; Standard for Smoke Detectors for Duct Application
   e. 346; Water-Flow Indicators for Fire Protective Signaling Systems
   f. 464; Audible Signaling Appliances
   g. 521; Heat Detectors for Fire Protective Signaling Systems
   h. 864; Control Units for Fire Protective Signaling Systems
   i. 1481; Power Supplies for Fire Protective Signaling Systems
   j. 1635; Standard for Digital Alarm Communicator System Units
   k. 1638; Standard for Visual Signaling Appliances - Private-Mode Emergency and General Utility Signaling
   l. 1971; Signaling Devices for the Hearing-Impaired

1.03 SYSTEM DESCRIPTION

A. The fire alarm system shall be zone, non-coded addressable. It shall be 24Vdc closed circuit, electronically supervised, common signaling, device indicating, automatic alarm type; operating from manual pull stations, smoke detectors, heat detectors and sprinkler system switches. The system shall include all wiring, raceways, pullboxes, terminal cabinets, outlet and mounting boxes, control equipment, alarm and supervisory signal initiating devices, alarm notification devices and all other accessories required for a complete and operational system

B. Provide system with the following circuit functions:
   1. Class B for initiating device circuits.
   2. Style 4 for signal circuits.
   3. Class B, Style Y for notification device circuits.

C. Activation of any alarm initiating device shall:
   1. Cause all audible and visible evacuation alarm devices to sound and/or pulse throughout the system until silenced at the control panel or remote annunciator.
   2. Display individual addressable initiating device and/or zone number in alarm with a minimum of 80 character alphanumeric display.

3. Transmit alarm signal to remote monitoring station.

D. System shall provide supervisory signals for the following:
   1. System trouble, consisting of:
      a. Removal of an initiating device from any circuit.
      b. An open or ground fault in any circuit.
      c. An open, short or ground fault in an annunciation circuit.
      d. A ground fault on any DC voltage line.
      e. Removal of system input, output or control modules.
      f. Improper battery or charger condition.
   2. Sprinkler valve monitor switch.

E. Failure of any circuit supervised by the control panel shall:
   1. Cause trouble audible indicators to sound until silenced.
   2. Cause the offending addressable device and/or zone to display at control panel and/or remote annunciator.
   3. Transmit a trouble signal to remote monitoring station.

F. Failure of AC power shall:
   1. Cause trouble audible indicators to sound until silenced.
   2. Display condition at control panel and/or remote annunciator.
   3. Cause automatic transfer to standby battery power; all system function shall be operational during AC power failure.

G. In addition to the above sequence of operation, the control panel shall perform the following functions:
   1. Identify each addressable device by location, priority and device type.
   2. Read and display at control panel and/or remote annunciator the sensitivity of addressable, programmable initiating devices.
   3. Remain 100% operational and capable of responding to an alarm condition while in routine maintenance mode.
   4. Be capable of supporting non-addressable devices as well as addressable devices.
   5. Allow individual, programmable control of each connected remote or panel-mounted relays.
   6. Change the status of configured circuits and relay status.
   7. Generate an addressable detector sensitivity report providing a chamber voltage (device testing) for each detector.

1.04 SUBMITTALS

A. Submit manufacturer’s data for materials specified within this Section in accordance to Section 26 05 00.

B. The system to be provided as approved by the fire authority having jurisdiction, and shall conform to the approved plans. Submittals are not required when conforming to the Drawings.

C. Operating, maintenance and instruction manuals shall be furnished in accordance with General Conditions and Section 26 05 00.

D. Operating instruction manuals outlining the step-by-step procedures required for system start-up and operation shall be furnished. The instructions shall include manufacturer's name, model number, service manual parts list, and brief description of all equipment and their basic operating features.

E. Maintenance instruction manuals outlining maintenance procedures shall be furnished. The manual shall include a troubleshooting guide listing possible breakdowns and repairs and a simplified connection wiring diagram for the system as installed.

F. Provide completes asbuilts indicating cable plan and device addresses of the entire fire alarm system.

G. Submit test reports in accordance to this Section.

1.05 QUALITY ASSURANCE

A. All materials, equipment and parts comprising the materials specified herein shall be new and unused.

B. The system and all components must have proper listing and/or approval from the following nationally recognized agencies:

1. UL Underwriters Laboratories Inc
2. FM Factory Mutual
3. CSFM California State Fire Marshal

C. Vendor/supplier qualifications

1. Equipment provided shall be by a manufacturer in business for not less than 10 years.
2. Shall have in-place support facilities within 150 miles of this project site with technical staff, spare parts, inventory and all necessary test and diagnostic equipment.
3. Shall be a manufacturer certified company with certified technicians to supervise installation, adjustments and tests of the system
4. Be an UL certified alarm company and UL certify the fire alarm system.

D. All final connections and programming shall be made by manufacturer's certified technicians.

1.06 DELIVERY, STORAGE AND HANDLING

A. Handle carefully to avoid damage to internal components, enclosure and finish.

B. Store in a clean, dry environment. Maintain factory packaging and, if required, provide an additional cover to protect enclosure in harsh environments.

1.07 WARRANTY

A. Furnish guarantee in accordance with and in form required under Section 26 05 00.

1.08 SYSTEM STARTUP

A. Upon completion of installation, a factory trained service representative shall perform initial start-up of the fire alarm system. Sufficient time shall be allowed to properly check system out and perform required minor adjustments prior to final testing and certification.

PART 2 – PRODUCTS

2.01 MANUFACTURERS

A. As shown on Drawings or approved equal.

2.02 CONTROL PANEL

A. System features/capability summary

1. The panel shall comply with applicable requirements of UL 864 and provide power, annunciation, supervision and control for the complete fire alarm system. The panel shall be modular in construction, installed in a steel cabinet with hinged door and cylinder lock, containing all modules necessary to operate as indicated herein.
2. Addressable devices shall be individually identified by the system and any quantity of addressable devices may be in alarm at any time up to the total number connected to the system.
3. The panel annunciator shall be a minimum of an 80 character alphanumeric display, which shall provide a user definable custom message associated with each detection device or zone.
4. The time delay between the activation of an initiating device and the automatic activation of local fire safety function shall not exceed 10 seconds.
5. Dynamic supervision of system electronics, wiring, initiating devices and software shall be provided by the control system. Failure of system hardware or wiring shall be indicated by type and location on the alphanumeric annunciator. Software and processor operation shall be monitoring by an independent hardware watchdog, which will indicate their failure. The panel shall provide failsafe operation, i.e. all incoming alarms shall override all other modes of operation.
6. Provide a service mode to permit the arming and disarming of individual initiating or output devices as well as manually operating output devices. Status of these devices shall be displayed upon the command from the control panel. The panel shall automatically return to normal mode in the event the panel remains unattended in the service mode.
7. The panel shall be capable of measuring and adjusting the sensitivity of addressable detectors upon request. An alphanumeric display shall be provided to display custom messages and give the readings of detector’s sensitivity. Each

device on an addressable initiating circuit shall be checked continuously to include the following:

a. Sensitivity

b. Response

c. Opens

d. Shorts

e. Ground faults

f. Functionality

g. Status

8. The panel shall monitor the addressable smoke detectors in such a manner that if the detector becomes dirty, and reaches and maintain 80% of alarm threshold for 5 consecutive hours, a trouble condition indicating exactly which device needs service shall be automatically annunciated. If the device becomes too insensitive for a period of 10 seconds, the trouble indication will read: “Immediate maintenance required” or similar.
9. The panel shall report, by specific device number, any device removal from addressable initiating circuit and all other devices shall continue to function.
10. The panel shall automatically indicate the total quantity of alarms and troubles, which have occurred prior to reset at the control unit.
11. No alarm or trouble indication shall be re-settable until acknowledged. It shall not be possible to reset the system until all alarms have been acknowledged.
12. The panel shall be capable of:
    a. Counting the number of addressable devices with a designated area or “zone” which are in alarm.
    b. Counting “zones” which are in alarm.
    c. Counting number of addressable devices, which are in alarm on the system.
    d. Differentiating among types of addressable devices such as smoke detectors, manual stations, waterflow switches, heat detectors, etc.
    e. Assign priorities to types of devices, zones or groups of devices.
    f. Cross-zoning.
13. Each addressable device shall report its condition to the panel control unit every 3 seconds in a manner such that failure of the connections to or internal electronics of the device will result in a trouble signal that identifies the specific device involved.
14. The panel shall also be capable of operating non-addressable Class A or B initiating.
15. Alarm and trouble from non-addressable initiating circuits (zones) shall be annunciated and cause output functions in the same manner as addressable detection devices including a location message for each zone.
16. Panel output circuits shall be supervised and capable of providing 1.5A at 24Vdc minimum.

17. Provision for programmable control relays in the panel shall be included having dry contacts rated at 5A, 120Vac.
18. Programmable remote relays shall be controlled in the same manner as panel mounted relays.

B. Initiating and notification modules

1. All modules shall be plug-in, dynamically supervised and easily replaceable. Field wiring shall be connected to the panel with removable multi-conductor connectors to facilitate rapid removal and replacement of both the modules and wiring for ease of service. The modules shall be system interconnected by a card edge connector.
2. Provide zone input addressable modules for monitoring non-addressable initiating circuits.
3. Provide programmable signal modules on output circuits for operation notification devices.
4. Provide, as needed, programmable supplementary relay modules containing four independent relays fitted with form “C” contacts, rated at 5A, 120Vac.

C. Power supply

1. Adequate to serve the control panels various modules and devices connected to the system. Power supplies shall be both internal and remote to the control panel as required. All power connections whether AC or DC shall be separately fused within panel.

D. Storage batteries

1. Shall be provided and shall be sealed, nickel-cadmium types. The batteries shall have ample capacity with primary power disconnected to operate the system as required by NFPA 72. Following this period of operation via batteries, the batteries shall have ample capacity to operate all system components, including notification devices on the panel for a period of 5 minutes. Battery cabinet shall be a separate compartment within the control panel or battery cabinet with steel cabinet and hinged door with cylinder lock.

E. Battery charger

1. Provide an automatic dual rate (high rate and float charge) battery charger capable of recharging batteries to 80% capacity within 8 hours. The charger output shall be supervised and fused. A pilot light indicating when batteries are manually placed on a high rate of charge as part of the unit assembly, if a high rate switch is provided. Charger shall be located with control panel or battery cabinet.

2.03 INITIATING DEVICES

A. General

1. Addressable devices shall be connected onto addressable initiating circuits and be capable of field programming for its “address” location on the initiating circuit.
2. Devices shall have screw terminal for terminal of each conductor.
3. Devices shall be dynamically supervised and individually identified (when addressable) from the control panel.

B. Manual pull stations

1. Shall conform to applicable requirements of UL38.
2. Stations shall be single action type, finished in red, with raised letter operating instructions of action type.
3. A key shall be required to reset the station.

C. Smoke detectors

1. General
   a. Shall conform to applicable requirements of UL268.
2. Photoelectric detector
   a. Detector shall be of electronic design for detection of abnormal smoke densities.
   b. Detector shall utilize a LED & light sensing photodiode within a chamber to monitor light dissipation and reflections. Long term changes caused by environmental conditions shall be automatically compensated.
   c. All electronics shall be contained within detector head and plug to a terminal base.
   d. Detector shall have multiple sensitivity adjustment levels from the control panel.
3. Ionization detector
   a. Detector shall be of electronic design for detection of products of combustion.
   b. Detector shall utilize self-compensating dual ionization chambers. Long term changes caused by environmental conditions shall be automatically compensated.
   c. Detector shall be sensitivity adjustable from the control panel.
4. Duct smoke detector
   a. Detector shall have a duct housing, mount exterior to the duct and sampling tube.
   b. Detector type shall be per Drawing and rated for the air velocity to be expected.
5. Linear beam detector
   a. Detector shall be of electronic design for detection of abnormal smoke densities.
   b. Detector shall utilize an integrated infra-red transmitter and receiver. A passive reflector unit shall redirect beam as necessary to obtain required coverage.
   c. Detector shall have multiple sensitivity adjustment levels from the control panel.

D. Interface modules

1. Addressable module shall be used for interfacing normally open or normally closed direct shorting contact devices onto addressable initiating circuit.

E. Programmable relay modules

1. Addressable module containing a programmable control relay with contacts rated at 2.0A at 30Vdc and 0.6A at 120Vac, minimum.

2.04 NOTIFICATION DEVICES

A. These units shall be flush mounted where possible in all finished locations. All units shall be red in color unless otherwise noted.

B. Audible, visual and audible/visual units

1. All units shall be UL and CSFM listed for the application and location shown on Drawing.

2. Horns

a. The horn shall be listed per UL 1480.

b. The audible portion of the appliance shall have a minimum of three (3) field selectable settings for dBA levels, and the anechoic sound pressure measurement on Temporal (Code 3) setting shall be 87 dBA minimum at 24VDC.

3. Horn/strobes

a. The horn shall be listed per UL 1480 and strobe shall be of low current design with candela ratings per UL 1971.

b. The audible portion of the appliance shall have a minimum of three (3) field selectable settings for dBA levels, and the anechoic sound pressure measurement on Temporal (Code 3) setting shall be 87 dBA minimum at 24VDC.

c. Produce a flash rate of one flash per second over the regulated voltage range and shall incorporate a xenon flashtube enclosed in a rugged Lexan® lens.

4. Strobes

a. Strobe shall be of low current design with candela ratings per UL 1971.

b. Produce a flash rate of one flash per second over the regulated voltage range and shall incorporate a xenon flashtube enclosed in a rugged Lexan® lens.

C. Remote power supplies

1. Shall be mounted within a hinged NEMA 1 enclosure with locking door.

2. The power supplies shall be activated by a supervised relay from control panel or remote mounted, addressable relay module.

3. Backup power shall be required such that loss of utility power shall not cause the system operator to be required to restart the system or any part thereof upon return of power. The backup power supply shall be listed for life safety applications and provide sufficient operation based upon maximum connected load as required by NFPA 72.

4. Provide an automatic dual rate (high rate and float charge) battery charger capable of recharging batteries to 80% capacity within 8 hours. The charger output shall be supervised and fused.

5. A solid-state power transfer circuit shall switch to standby power automatically and instantaneously if normal power fails or falls below 15% of normal. This electronic circuit shall allow the batteries to be effectively “floated” on the operating system to avoid upsetting the normal microprocessor scan and minimize resultant nuisance troubles and/or alarms.

D. Synchronization modules

1. Module shall be connected to the notification circuits and used to synchronize the flash rate of strobe devices where required by NFPA 72. Synchronization shall match Code 3 temporal pattern with a flash rate of 1Hz.

2.05 AUXILARY EQUIPMENT AND SUPERVISION

A. Under this Section provide connections to the following equipment to activate control sequence of operation.

1. Fire sprinkler system components

a. Provide supervised relay interface whether remote mounted, addressable interface module or control panel auxiliary relay for each of the following devices:

1) Each waterflow switch to initiate an alarm signal.

2) Each valve monitor switch to initiate a trouble signal.

PART 3 – EXECUTION

3.01 INSTALLATION

A. Work shall be installed as shown on the Drawings in accordance with the manufacturer’s diagrams and recommendations, except where otherwise indicated.

B. The AC circuit(s) supplying required power to system components shall be connected as shown on Drawings. Circuit breaker shall be indicated by the color red and labeled as “FIRE ALARM CIRCUIT”.

C. Raceway and related infrastructure

1. Wiring for systems shall be installed in rigid metal conduit, intermediate metallic conduit or electric metallic tubing as specified in Section 26 05 33.

2. Control panel(s) and cabinets(s) shall be mounted with sufficient clearance for observation and testing.

3. All fire alarm junction boxes must be clearly marked for distinct identification.

4. A 3/4” empty conduit from control panel to the nearest telephone closet shall be provided. Ample gutter space at control panel to accommodate all necessary wiring shall be provided as required.

D. Cabling requirements

1. Conductors for fire alarm system shall not be installed in lighting and power conduits, junction boxes, or outlet boxes.

2. External wiring between control panel and stations and horns shall connect to terminal strips in accessible locked cabinets. Connection to terminal strips shall be made with terminal spade lugs or with approved type terminal blocks.

3. All wiring shall be run in continuous lengths between terminal cabinets to equipment, no splicing permitted.
4. All notification appliance circuit wiring shall be color coded; solid copper, 600 volts, UL approved for fire alarm use; minimum size, #16 AWG for detector circuit and #14 AWG for alarm circuits unless specified otherwise. All detector and alarm wires shall be per manufacturer requirements and shall be identified with E-Z Code or Brady wire markers by zones, or equivalent, at each junction box, detector outlet, pull station, horn, and master terminals.
5. All final connections to panel and devices shall be made by manufacturer's certified technicians.

E. Fire alarm devices requirements

1. All devices shall be installed in accordance with the applicable listing requirements. Locations and equipment shall be as indicated on the approved Drawings.
2. Detectors shall be installed in accordance with NFPA 72 and the manufacturer's written instructions in areas as indicated on Drawings.
3. Do not locate detectors in direct air stream from supply air outlets. Install 48" minimum from air register.
4. Provide access doors as required in ceilings where detectors are within attic or concealed space. Provide laminated engraved nameplate with white letters on yellow background attached to door. To read "FIRE ALARM DETECTOR LOCATED ABOVE CEILING". On lay-in ceilings provide nameplate on ceiling tile directly below detector.

3.02 FIELD QUALITY CONTROL

A. Notify the Engineer 30 days before performance and acceptance tests are to be conducted. Perform tests in the presence of Architect, Engineer and/or local Fire Marshal or his authorized representative, and the Inspector of Record. Furnish all instruments and personnel required for tests. Conduct tests for following:

1. Verify that the system is free of grounds or open circuits. The central control board shall indicate when a ground or open circuit exists.
2. Verify that horns, stations, transmitters, automatic detectors and supervisory devices are functioning as specified. Criteria for testing shall be as follows:
    a. Stations shall close the circuits specified and deliver specified alarm signal.
    b. Automatic detectors shall actuate the specified zones when the appropriate fire or smoke conditions are generated.
    c. Panels and supervisory devices shall display and control functions as specified.

B. Performed under the supervision of qualified manufacturer's representative.

C. Re-conducted tests to verify correction of any defect found in initial testing.

D. Upon completion of detector installation and system tests, certified technician shall submit 3 copies of written report on manufacturer's inspection and test forms to indicate system has been fully tested in supervision, trouble and alarm modes, and is fully operational conforming to letter of these Specifications.

E. Test report shall contain, but is not limited to, the following:

1. Technician's name, certificate number, and date.
2. A complete test of equipment installed and wired.
3. Indication that all equipment is properly installed.
4. Tests of individual zones as applicable.
5. Serial numbers, locations by zone and model number for each installed detector.
6. Voltage sensitivity settings for each ionization detector as measured in place with the air conditioning system operating.

F. After completion of all tests and adjustments listed above, Contractor shall submit following information to Engineer:

1. As-built conduit layout diagrams including wire color code and/or tag number.
2. Complete as-built wiring diagrams on manufacturer's title block with all device addresses.
3. Detailed catalog data on all installed system components.
4. Operation and maintenance manuals, 4 copies.
5. Copy of technician's certified report (as above).
6. Written certification by manufacturer stating that system and its component parts are as listed and approved by California State Fire Marshal and that installation conforms in all respects to requirements of applicable California Codes.

G. Provide phenolic nameplate labels for all equipment cabinets, terminal cabinets, and devices (initiating, notification and remote modules) as programmed at fire control panel and recorded within shop drawings. Cabinet nameplate to be mechanically fastened, and devices (initiating, notification and remote modules) to be adhesively fastened to nearest wall, ceiling, or device surface wherever possible. Nameplate shall be 3/8" high minimum white lettering on a red background.

3.03 ADJUSTING

A. Calibrate and adjust all detectors to manufacturer's standards in place and under dynamic field operating conditions using testing equipment built by manufacturer specifically for this purpose.

3.04 DEMONSTRATION

A. Contractor shall include a minimum of 8 hours of instruction in operation of system by a manufacturer's factory authorized representative to Owner.

END OF SECTION

GENERAL NOTES

1. ON-SITE VERIFICATION OF ALL DIMENSIONS AND DETAILS SHALL BE THE RESPONSIBILITY OF THE GENERAL CONTRACTOR AND EACH SUBCONTRACTOR FOR HIS INDIVIDUAL WORK. THE OWNER OR ARCHITECT SHALL BE NOTIFIED IF ANY DISCREPANCIES ARE FOUND PRIOR TO COMMENCING ANY WORK. THE RESPONSIBILITY FOR WORK COMPLETED WITHOUT PROPER NOTIFICATION SHALL BE BORNE BY THE INDIVIDUAL CONTRACTOR INVOLVED.
2. THE CONTRACT DOCUMENTS INDICATE THE EXTENT AND APPROXIMATE LOCATION OF ELEMENTS OF THE BUILDING AND SITE. ALL CONDITIONS, LOCATIONS, DEVICES AND ELEMENTS SHALL BE VERIFIED BY THE CONTRACTOR PRIOR TO COMMENCING THE WORK.
3. ALL WORK PERFORMED IN CONNECTION WITH THESE CONTRACT DOCUMENTS SHALL COMPLY WITH THE AMERICANS WITH DISABILITIES ACT (ADA), ALL APPLICABLE STATE AND LOCAL CODES, ORDINANCES, AND ZONING REGULATIONS IN EFFECT AT THE TIME OF CONSTRUCTION. THIS PROJECT SHALL COMPLY WITH TITLE 24, 2019 CBC, CMC, CPC, CFC, CEC BASED ON THE 2019 CALIFORNIA ENERGY STANDARDS.
4. IT SHALL BE UNDERSTOOD THAT THE INTENT OF THESE CONSTRUCTION DOCUMENTS IS TO CONSTRUCT THE FACILITY IN ACCORDANCE WITH THE APPLICABLE CODES AND ORDINANCES. SHOULD ANY CONDITION BE UNCOVERED OR DEVELOP DURING THE EXECUTION OF THESE DOCUMENTS, WHICH IS NOT DEFINED HEREIN, THE CONTRACTOR SHALL CEASE WORK AND NOTIFY THE ARCHITECT AT ONCE.
5. THE TYPICAL DETAILS SHOWN IN THESE PLANS SHALL APPLY IN ALL SIMILAR CASES UNLESS SPECIFICALLY NOTED OTHERWISE. WHERE NO DETAIL IS SHOWN, CONSTRUCTION SHALL BE AS INDICATED FOR OTHER SIMILAR WORK AND, OR APPLICABLE INDUSTRY PRACTICE.
6. THE CONTRACTOR SHALL BE RESPONSIBLE FOR ALL COORDINATION OF INSTALLATION, INSPECTION, AND FINAL APPROVAL OF ALL UTILITIES.
7. VERIFY ALL DIMENSIONS, EXISTING CONDITIONS, AND METHODS OF CONSTRUCTION PRIOR TO START OF ANY WORK. NOTIFY THE ARCHITECT OF ANY DISCREPANCIES.
8. IT IS NOT THE INTENT OF THESE CONTRACT DOCUMENTS TO SEPARATE THE WORK INTO SUBTRADE DIVISIONS. IT SHALL BE THE RESPONSIBILITY OF THE GENERAL CONTRACTOR TO DIVIDE THE WORK AND ORGANIZE ALL WORK AS REQUIRED TO COMPLETE THE WORK AS INTENDED BY THESE DOCUMENTS.
9. SITE DEVELOPMENT AND GRADING SHALL PROVIDE ACCESS TO PRIMARY ENTRANCES AND NORMAL PATHS OF TRAVEL, AND SHALL INCORPORATE PEDESTRIAN RAMPS, CURB RAMPS, ETC. ALL RAMPS SHALL HAVE A MAXIMUM SLOPE OF 1:12, OR AS NOTED ON THESE CONSTRUCTION DOCUMENTS. ANY PATH OF TRAVEL SHALL BE CONSIDERED A RAMP IF IT'S SLOPE IS GREATER THAN 1 FT. RISE IN 20 FT. RUN (5%)
10. EACH PARKING FACILITY WHERE PARKING IS PROVIDED FOR THE PUBLIC, GUESTS OR EMPLOYEES SHALL PROVIDE ACCESSIBLE PARKING AND LOADING STALLS DESIGNATED SPECIFICALLY FOR PERSONS WITH DISABILITIES.
11. THE CONTRACTOR SHALL BE RESPONSIBLE FOR VERIFYING THE LOCATION OF ALL EXISTING UNDERGROUND UTILITIES PRIOR TO THE COMMENCEMENT OF WORK. HE SHALL BE RESPONSIBLE FOR THE LOCATION AND PRESERVATION OF ALL SUCH FACILITIES IN THE AREA OF CONSTRUCTION, AND SHALL NOTIFY UTILITY COMPANIES 48 HOURS IN ADVANCE OF ANY CONSTRUCTION (UNDERGROUND SERVICE ALERT 1-800-227-2600)
12. EACH PARKING SPACE RESERVED FOR PERSONS WITH PHYSICAL DISABILITIES SHALL BE IDENTIFIED BY A REFLECTORIZED SIGN PERMANENTLY POSTED IMMEDIATELY ADJACENT TO AND VISIBLE FROM EACH STALL OR SPACE, CONSISTING OF A PROFILE VIEW OF A WHEELCHAIR OCCUPANT IN WHITE ON A BLUE BACKGROUND. THE SIGN SHALL NOT BE SMALLER THAN 70 SQ. IN. IN AREA AND, WHEN POSTED IN A PATH OF TRAVEL, SHALL BE A MINIMUM HEIGHT OF 80 INCHES FROM THE BOTTOM OF THE SIGN TO THE PARKING SPACE FINISH GRADE, UON. IN ADDITION, A SIGN, AS SPECIFIED IN TITLE 24 ACCESSIBILITY STANDARDS, SHALL BE POSTED IN A CONSPICUOUS PLACE, AT EACH ENTRANCE TO OFF-STREET PARKING FACILITIES, OR IMMEDIATELY ADJACENT TO AND VISIBLE FROM EACH STALL OR SPACE. SAID SIGNS SHALL BE NOT LESS THAN 17 INCHES X 22 INCHES IN SIZE WITH LETTERING NOT LESS THAN 1 INCH HIGH.
13. PROVIDE A CLEAR AND LEVEL LANDING ON EACH SIDE OF AN EXIT DOOR. THE LANDING SHALL BE 48 INCHES IN LENGTH WHERE THE DOOR SWINGS AWAY FROM THE LANDING, AND 60 INCHES IN LENGTH IN THE DIRECTION OF DOOR SWING AS MEASURED AT RIGHT ANGLES TO THE PLANE OF THE DOOR IN THE CLOSED POSITION.
14. GENERAL DEMOLITION: WHENEVER EXISTING FACILITIES OR MATERIALS ARE REMOVED, DAMAGED, BROKEN, OR CUT IN THE INSTALLATION OF WORK COVERED BY THE DRAWINGS AND SPECIFICATIONS, SAID FACILITIES AND MATERIALS SHALL BE REPLACED AT THE CONTRACTOR'S EXPENSE. SAID FACILITIES OR MATERIALS SHALL BE EQUAL TO OR BETTER THAN THE ORIGINAL FACILITIES OR MATERIALS. THE FINISH PRODUCT SHALL BE SUBJECT TO THE APPROVAL OF THE COUNTY AND ITS AGENTS.
15. NO WORK SHALL COMMENCE AT THE PROJECT SITE BEFORE A BUILDING PERMIT IS FULLY EXECUTED AND AVAILABLE FOR POSTING AT THE JOB SITE.
16. CONSTRUCTION LIMITS: CONTRACTOR AND SUB-CONTRACTORS, WORKERS AND OTHER PERSONNEL RELATED TO THIS SCOPE OF WORK, SHALL BE CONFINED WITH THE AREAS DESIGNATED AS CONSTRUCTION LIMITS AS INDICATED BY THESE DRAWINGS AND RELATED AREAS. AREAS BEYOND THIS SCOPE OF WORK SHALL BE OFF LIMITS, AND THEIR USE SHALL BE PROHIBITED WITHOUT PRIOR AUTHORIZATION OF LATHROP-MANTECA FIRE DISTRICT. THE GENERAL CONTRACTOR SHALL VERIFY THESE LIMITS AND BE RESPONSIBLE TO INFORM THE APPROPRIATE PERSONNEL AND ENFORCE THESE LIMITS.
17. PROVIDE CONTINUOUS 16GA. X REQUIRED WIDTH (6" MIN.) FLAT BACKING STRAP AT WALLS WITH WALL MOUNTED EQUIPMENT, CASEWORK, AND/OR ACCESSORIES - TYPICAL UNLESS OTHERWISE NOTED.
18. THE CONTRACTOR SHALL CAREFULLY STUDY AND COMPARE THE CONTRACT DOCUMENTS AND THE EXISTING FIELD CONDITIONS, AND SHALL AT ONCE REPORT TO THE ARCHITECT ANY ERROR, INCONSISTENCY, OR OMISSION HE MAY DISCOVER. THE CONTRACTOR SHALL PERFORM NO PORTION OF THE WORK AT ANY TIME WITHOUT APPROVED CONTRACT DOCUMENTS OR WHERE REQUIRED, APPROVED SHOP DRAWINGS, PRODUCT LITERATURE, DATA, SAMPLES OR INSTALLATION INSTRUCTIONS.
19. THE CONTRACTOR SHALL OBTAIN AN ENCROACHMENT PERMIT, WHERE APPLICABLE, FOR ANY WORK DONE WITHIN THE RIGHT-OF-WAY OR EASEMENTS FROM THE AUTHORITY HAVING JURISDICTION. THE CONTRACTOR SHALL NOTIFY THE OWNER 48 HOURS IN ADVANCE OF COMMENCEMENT OF THE WORK OR AS REQUIRED BY SAID PERMITS.
20 THE CONTRACTOR SHALL BE RESPONSIBLE FOR ALL CUTTING, FITTING, OR PATCHING THAT MAY BE REQUIRED TO COMPLETE THE INTENT OF THESE CONSTRUCTION DOCUMENTS, TO MAKE IT'S SEVERAL PARTS FIT TOGETHER PROPERLY. THE CONTRACTOR SHALL PATCH ARCHITECTURAL FINISHES AS NECESSARY TO ACCOMPLISH WORK DEFINED IN STRUCTURAL, MECHANICAL, PLUMBING, ELECTRICAL, AND ARCHITECTURAL DRAWINGS. EXISTING FIELD CONDITIONS SHALL BE VERIFIED BY THE CONTRACTOR AND ACCEPTED AS CONDITIONS OF THIS SCOPE OF WORK.
21. THE ELECTRICAL CONTRACTOR SHALL COORDINATE WITH PG&E AND/OR SERVICE PROVIDER FOR ANY NEW SERVICE INSTALLATIONS. THE CONTRACTOR SHALL COORDINATE THE SHUT DOWN OF THE FACILITIES WITH THE OWNER FOR AS MINIMAL DURATION AS POSSIBLE. INTERCEPT THE EXISTING SERVICE CONDUIT, EXTEND IT TO NEW TRANSFORMERS AND PAD (TO BE INSTALLED BY CONTRACTOR) AND EXTEND SECONDARY CONDUITS TO THE NEW SWITCHBOARD. COORDINATE WITH THE OWNER TO VERIFY LOCATION, PROVIDE TRAFFIC BARRIER POSTS PER PG&E REQUIREMENTS.
22. CONTRACTOR SHALL FLUSH ALL WATER, SEWER, AND DRAIN LINES PRIOR TO HOOK UP.
23. DIMENSIONS SHALL BE MEASURED TO FACE OF FRAMING, U.O.N. DO NOT SCALE DRAWINGS.
24. PROVIDE 2% SLOPE AWAY FROM THE BUILDING FOR 10'-0" AT FRONT AND SIDES.
25. NO DRAINAGE ACROSS OR ONTO ADJACENT PROPERTY. PROVIDE 2% SLOPE AWAY FROM THE BUILDING FOR 10'-0" AT FRONT AND SIDES.
26. DO NOT SCALE THE DRAWINGS.

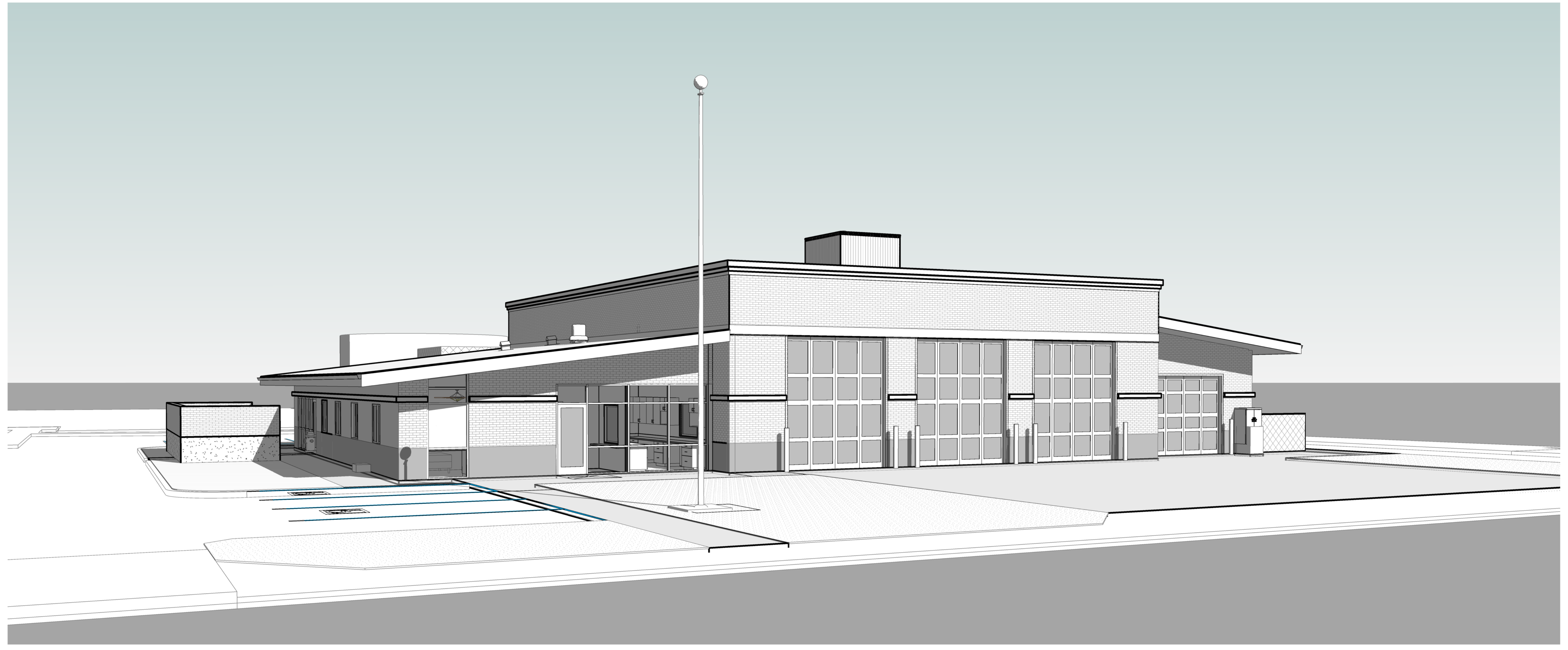

LATHROP-MANTECA FIRE DISTRICT

FIRE STATION 31 REHABILITATION

800 J. STREET, LATHROP, CA 95330

PERMIT SET
DECEMBER 2020

ABBREVIATIONS

ACOUS	ACOUSTICAL
ACT	ACOUSTICAL CEILING TILE
AD	AREA DRAIN
ADJ	ADJUSTABLE
AFF	ABOVE FINISH FLOOR
ALT	ALTERNATE
ARCH	ARCHITECT
B.O.	BOTTOM OF
BD	BOARD
BET	BETWEEN
BLKG	BLOCKING
BM	BEAM
BOT	BOTTOM
BRKT	BRACKET
BUR	BUILT UP ROOF
C.G.	CORNER GUARD
CAB	CABINET
CALK	CAULKING
CER	CERAMIC
CJ	CONTROL JOINT
CLOS	CLOSET
CLR	CLEAR
CO	CASED OPENING
COL	COLUMN
CONT	CONTINUOUS
CPT	CARPET
CT	CERAMIC TILE
CTR	CENTER
DIA	DIAMETER
DIM	DIMENSION
DN	DOWN
DR	DOOR
DS	DOWN SPOUT
DWG	DRAWING
(E)	EXISTING
EA	EACH
ELEV	ELEVATION
EMER	EMERGENCY
ENCL	ENCLOSURE
EOS	EDGE OF SLAB
EQ	EQUAL
EW	EACH WAY
F.O.	FACE OF
FA	FIRE ALARM
FAP	FIRE ANNUNCIATOR PANEL
FD	FLOOR DRAIN
FE	FIRE EXTINGUISHER
FEC	FIRE EXTINGUISHER CABINET
FH	FIRE HYDRANT
FIN	FINISH
FRP	FIBER-REINFORCED PLASTIC
FT	FOOT OR FEET
FUR	FURRING
G.S.M.	GALVANIZED SHEET METAL
GAL	GALLON
GALV	GALVANIZED
GB	GRAB BAR
GC	GENERAL CONTRACTOR
GL	GLASS
GND	GROUND
GWB	GYPSUM BOARD
H.W.H.	HOT WATER HEATER
HDWD	HARDWOOD
HM	HOLLOW METAL
HT	HEIGHT
ID	INSIDE DIAMETER
INSUL	INSULATION
INT	INTERIOR
JST	JOIST
JT	JOINT
LAM	LAMINATE
LAV	LAVATORY
LDG	LANDING
LT	LIGHT
MEMB	MEMBRANE
MFR	MANUFACTURER

MIN	MINIMUM
MISC	MISCELLANEOUS
MO	MASONRY OPENING
MTD	MOUNTED
MTL	METAL
NIC	NOT IN CONTRACT
NO	NUMBER
NTS	NOT TO SCALE
O.P.	OVERFLOW PIPE
OA	OVERALL
OC	ON CENTER
OD	OUTSIDE DIAMETER
OPG	OPENING
OPP	OPPOSITE
PERM	PERIMETER
PG	PAINT GRADE
PLAM	PLASTIC LAMINATE
PLAS	PLASTER
PR	PAIR
PT	PAINT
R	RISER
RAD	RADIUS
RCP	REFLECTED CEILING PLAN
RD	ROOF DRAIN
REF	REFRIGERATOR
REINF	REINFORCED
REQD	REQUIRED
RESIL	RESILIENT
RO	ROUGH OPENING
RTU	ROOF TOP UNIT (MECH)
SAFB	SOUND ATTENUATION FIBER BATT
SC	SCUPPER
SCD	SEE CIVIL DRAWINGS
SCHED	SCHEDULE
SEAL	SEALANT
SECT	SECTION
SED	SEE ELECTRICAL DRAWINGS
SF	SQUARE FOOT
SFPD	SEE FIRE PROTECTION DRAWINGS
SHT	SHEET
SIM	SIMILAR
SLD	SEE LANDSCAPE DRAWINGS
SMD	SEE MECHANICAL DRAWINGS
SPD	SEE PLUMBING DRAWINGS
SPEC	SPECIFICATION
SQ	SQUARE
SS	STAINLESS STEEL
SSD	SEE STRUCTURAL DRAWINGS
STD	STANDARD
STL	STEEL
STOR	STORAGE
SUSP	SUPSPENDED
SYM	SYMMMETRICAL
T	TREAD
THK	THICK
THR	THRESHOLD
TO	TOP OF
TYP	TYPICAL
UC	UNDERCUT
UNFIN	UNFINISHED
UNO	ULNESS NOTED OTHERWISE
UON	UNLESS OTHERWISE NOTED
VCT	VINYL COMPOSITION TILE
VIF	VERIFY IN FIELD
VTR	VENT TERMINATION PIPE
VWC	VINYL WALL COVERING
W/	WITH
W/O	WITHOUT
WC	WATERCLOSET
WIN	WINDOW
WP	WATERPROOF
WSCT	WAINSCOT
WT	WEIGHT

CONTACTS

OWNER:
LATHROP-MANTECA FIRE DISTRICT
ADDRESS:
19001 SOMERSTON PARKWAY
LATHROP, CA 95330
PHONE: 209.941.5102
CONTACT:
EMAIL:

STRUCTURAL ENGINEER:
JC WAGNER AND ASSOCIATES
ADDRESS:
2132 EL DORADO ST.
STOCKTON, CA 95204
PHONE: 209-227-7646
CONTACT: DOUG WAGNER
EMAIL: dougw@precisionbuildusa.com

CIVIL ENGINEER:
MCR ENGINEERING
ADDRESS:
1242 DUPONT CT.
MANTECA CA 95336
PHONE: 209-239-6229
CONTACT: SHAWN SAMANIEGO
EMAIL: shawn@mcreng.com

MECHANICAL ENGINEER:
NEXUS ENGINEERING
ADDRESS:
1400-A LONE PALM AVE.,
MODESTO, CA95351
PHONE: 209-572-7399
CONTACT: DAN WILSON
EMAIL: d.wilson@nexusengineering.net

ARCHITECT:
LDA Partners, Inc.
ADDRESS:
222 Central Ct.
Stockton, CA 95204
PHONE: 209.943.0405
CONTACT: ERIC WOHLE
EMAIL: EWohle@ldapartners.com
CONTACT: Jun Coniconde
EMAIL: aconiconde@ldapartners.com

ELECTRICAL ENGINEER:
PEZZONI ENGINEERING, INC.
ADDRESS:
1150 9TH STREET # 1415
MODESTO, CA 95354
PHONE: 209-554-4602
CONTACT: KEVIN PEZZONI
EMAIL: kpezzoni@pezengr.com

PLUMBING ENGINEER:
NEXUS ENGINEERING
ADDRESS:
1400-A LONE PALM AVE.,
MODESTO, CA95351
PHONE: 209-572-7399
CONTACT: DAN WILSON
EMAIL: d.wilson@nexusengineering.net

SYMBOLS LEGEND

ROOM NAME 101	ROOM NAME & REFERENCE NUMBER
M4.1	WALL TYPE REFERENCE NUMBER; WALL HEIGHT (SEE ELEV.); MATERIAL WIDTH; MATERIAL TYPE (M) MTL, (W) WD
(101)	DOOR REFERENCE NUMBER
(101)	RATED DOOR REFERENCE NUMBER
1	WINDOW REFERENCE NUMBER
S100	STOREFRONT REFERENCE NUMBER
10 . 00	KEYNOTE REFERENCE: SEQUENCE NUMBER; CSI DIVISION NUMBER
1	GRID LINE
1 / A101	ELEVATION/SECTION REFERENCE: DETAIL NUMBER; SHEET NUMBER
1 / A10.00	INTERIOR ELEVATION: DETAIL NUMBER; SHEET NUMBER
1 / AD.00 SIM	DETAIL REFERENCE: DETAIL NUMBER; SHEET NUMBER
LEVEL 8'-0"	ELEVATION HEIGHT MARKER: LEVEL NAME; HEIGHT
8'-0"	SPOT ELEVATION HEIGHT MARKER

PROJECT DATA

REFERENCE	DESCRIPTION	INTERPRETATION
DESCRIPTION SCOPE	REHABILITATION	FACILITY EXTERIOR & INTERIOR UPGRADES
LOCATION	800 E J. STREET, LATHROP CA	
ZONING	R-1-5 (One Family Residential)	
APN	196-24-007	
SPECIAL USE PERMIT		
GENERAL INFORMATION	LOT AREA	2.5 ACRES (108,900 S.F.)
	FLOOR AREA	8,180 SF
	TOTAL BUILDING AREA	8,180 SF (2)
	ACTUAL BUILDING HEIGHT	34'-0"
	ACTUAL NUMBER OF STORIES	1 STORY
OCCUPANCY CBC 310.4 - 311.2	GROUPS	R-3, S-1
CBC 508.3	AUTOMATIC FIRE SPRINKLERS	YES
CBC TABLE 601	CONSTRUCTION TYPE	V- B (2)

VICINITY MAP

PROJECT LOCATION

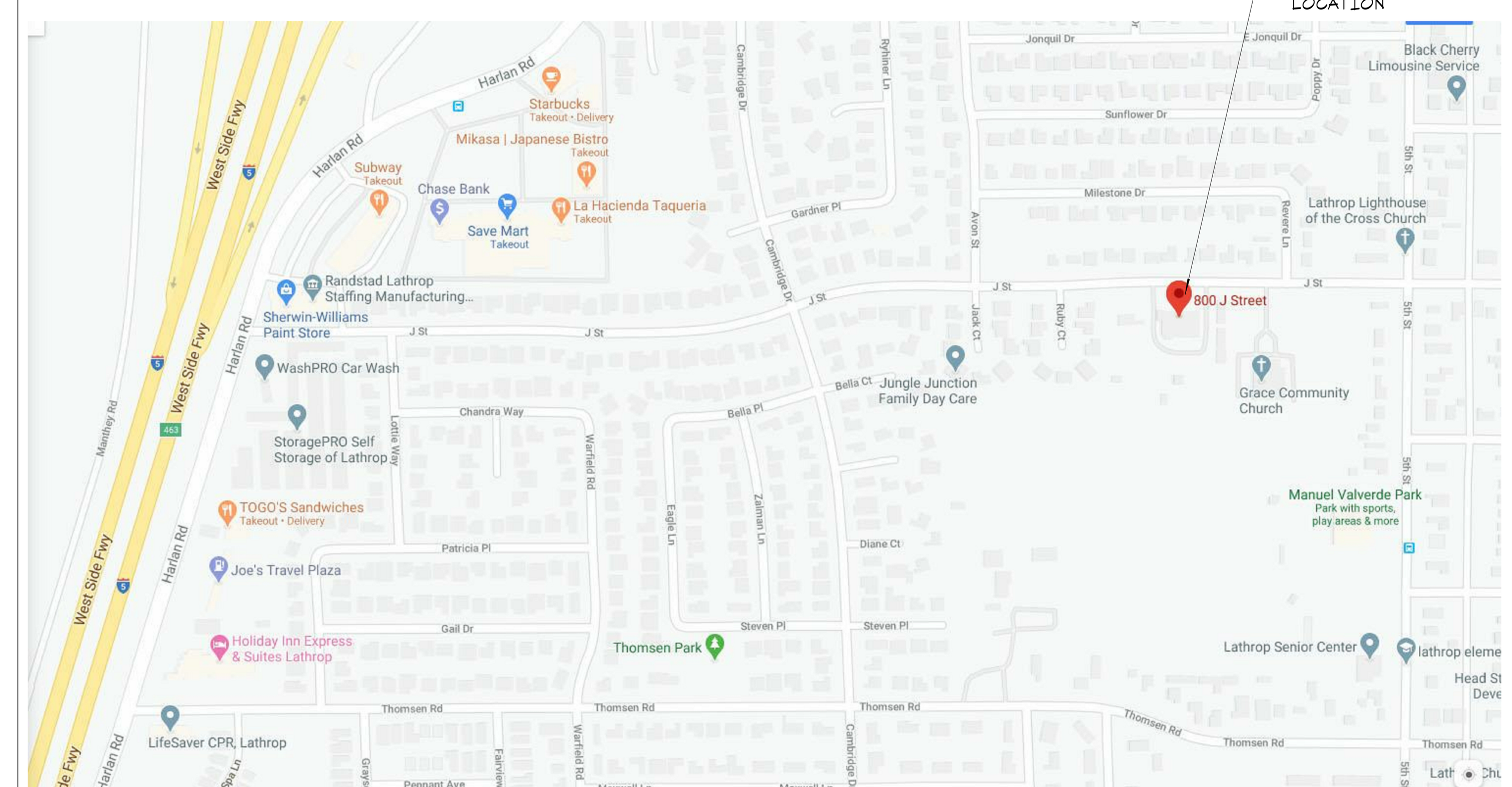

APPLICABLE CODES

TITLE 19 CCR, PUBLIC SAFETY, STATE FIRE MARSHAL REGULATIONS

TITLE 24 CCR, PART 1 - 2019 BUILDING STANDARDS ADMINISTRATIVE CODE

TITLE 24 CCR, PART 2 - 2019 CALIFORNIA BUILDING CODE, VOL. 1 & 2 (CBC) (2015 IBC, AS AMENDED BY CA)

TITLE 24 CCR, PART 3 - 2019 CALIFORNIA ELECTRICAL CODE (CEC) (2014 NEC, AS AMENDED BY CA)

TITLE 24 CCR, PART 4 - 2019 CALIFORNIA MECHANICAL CODE (CMC) (2015 IAPMO UMC, AS AMENDED BY CA)

TITLE 24 CCR, PART 5 - 2019 CALIFORNIA PLUMBING CODE (CPC) (2015 IAPMO UPC, AS AMENDED BY CA)

TITLE 24 CCR, PART 6 - 2019 CALIFORNIA ENERGY CODE

TITLE 24 CCR, PART 9 - 2019 CALIFORNIA FIRE CODE (CFC) (2015 IFC, AS AMENDED BY CA)

TITLE 24 CCR, PART 11 - 2019 CALIFORNIA GREEN BUILDING STANDARDS CODE

TITLE 24 CCR, PART 12 - 2019 CALIFORNIA REFERENCED STANDARDS (PARTIAL LIST - SEE CBC CH. 35 AND CFC CH. 80)

2019 NFPA 13, INSTALLATION OF SPRINKLER SYSTEMS (CA AMENDED)

2019 NFPA 72, NATIONAL FIRE ALARM CODE (CA AMENDED); SEE UL STD. 1971 FOR "VISUAL DEVICES"

TITLE 24 CCR, PART 2.5 - 2019 CALIFORNIA RESIDENTIAL CODE

CITY OF LATHROP MUNICIPAL CODE (1)

NOTE:

THE BUILDING AND SITE ARE WITHIN FULL COMPLIANCE OF CBC 11-B. THE UNREASONABLE HARDSHIP REQUEST FORM IS NOT APPLICABLE. (1)

SPECIAL INSPECTION :

1. GUNITE/SHOTCRETE
SHOTCRETE .... COMPRESSION TEST

2. STRUCTURAL WOOD
DIAPHRAGM CONSTRUCTION & NAILING .... 2-1/2" SPACING

3. EPOXY ANCHORS AND/OR REBAR.

(1)

DEFERRED SUBMITTALS:

FIRE SPRINKLER SYSTEM (2)

SHEET INDEX

GENERAL:
G0.00 COVER SHEET, PROJECT DATA, GENERAL NOTES, SYMBOLS & ABBREVIATIONS
G1.00 CALGREEN CHECKLIST
G1.01 CALGREEN CHECKLIST
G1.02 CALGREEN CHECKLIST
G2.00 LIFE SAFETY PLAN
G3.00 SIGNAGE DETAILS
G4.00 ACCESSIBILITY STANDARDS
G4.01 ACCESSIBILITY DETAILS

(2) CIVIL:
C1.0 NOTES & SPECIFICATIONS
C2.0 CONSTRUCTION DETAILS
C3.0 TOPOGRAPHIC SURVEY
C4.0 PAVING PLAN
C5.0 GRADING PLAN
C6.0 UTILITY PLAN
C7.0 EROSION CONTROL PLAN

ARCHITECTURAL:
A1.00 SITE PLAN
A1.10 ENLARGED DEMOLITION SITE PLAN
A1.20 ENLARGED SITE PLAN
A1.30 GENERATOR ENCLOSURE PLAN & DETAILS
A2.00 EXISTING/DEMOLITION FLOOR PLAN
A2.01 EXISTING/DEMOLITION REFLECTED CEILING PLAN
A2.02 EXISTING ROOF DEMOLITION PLAN
A3.00 PROPOSED FLOOR PLAN
A4.00 PROPOSED REFLECTED CEILING PLAN
A5.00 ROOF PLAN
A6.00 EXTERIOR ELEVATIONS
A6.10 EXTERIOR ELEVATIONS
A7.00 BUILDING SECTIONS
~~A7.10 BUILDING SECTIONS~~
A7.11 WALL SECTIONS
(2) ~~A8.00 ENLARGED FLOOR PLAN~~
A8.01 INTERIOR ELEVATIONS
A8.02 INTERIOR ELEVATIONS
A9.00 ROOM FINISH SCHEDULE
A9.01 DOOR SCHEDULE
AD-01 DETAILS
AD-02 DETAILS
AD-03 DETAILS

STRUCTURAL:
S0.0 STRUCTURAL NOTES
S1.0 STRUCTURAL FLOOR PLAN
S2.0 FOUNDATION PLAN
S3.0 (N) CEILING FRAMING PLAN
S3.1 CEILING FRAMING DETAILS
S4.0 (E) ROOF FRAMING PLAN
S4.1 ROOF FRAMING DETAILS
S5.0 BUILDING SECTION C
S6.0 BUILDING SECTION D
S7.0 TOWER PLAN
S8.0 EXTERIOR SHOTCRETE REINF. WALL
S9.0 CMU WALL DETAILS

SHEET INDEX

MECHANICAL:
M1.00 MECHANICAL-LEGEND, NOTES, AND SCHEDULES
M1.01 MECHANICAL-GREEN BUILDING CODE NOTES
M2.00 MECHANICAL-DEMOLITION FLOOR PLAN
M2.01 MECHANICAL-DEMOLITION ROOF PLAN
M3.00 MECHANICAL- FLOOR PLAN
M3.01 MECHANICAL-ROOF PLAN
M4.00 MECHANICAL-DETAILS
~~M4.01 MECHANICAL-DETAILS~~
M4.02 MECHANICAL-DETAILS
M5.00 MECHANICAL PLYMOVENT LAYOUT, DETAILS, & SCHEDULE
M5.01 MECHANICAL DETAILS - (PLYMOVENT - SBTA SYSTEM)
(2) M5.02 MECHANICAL DETAILS - (PLYMOVENT - VSRX SYSTEM)
T24.01 ENERGY COMPLIANCE
T24.02 ENERGY COMPLIANCE
T24.03 ENERGY COMPLIANCE

PLUMBING:
P1.00 LEGEND, NOTES, AND SCHEDULES
P1.01 GREEN BUILDING CODE NOTES
P2.00 DEMOLITION FLOOR PLAN
P2.01 DEMOLITION ROOF PLAN
P3.00 FLOOR PLAN
P3.01 ROOF PLAN
P4.00 DETAILS

ELECTRICAL:
E1.0 GENERAL ELECTRICAL NOTES AND ABBREVIATIONS
E2.0 DEMOLITION-ELECTRICAL FLOOR PLAN
E3.0 PROPOSED POWER PLAN
E4.0 PROPOSED SIGNAL PLAN
E5.0 NEW LIGHTING PLAN
E5.1 LIGHTING SCHEDULE AND DETAILS
E6.0 EQUIPMENT POWER- ROOF PLAN
E7.0 PANEL SCHEDULE & SINGLE LINE DIAGRAM
~~E8.0 ELECTRICAL DETAILS~~
E9.1 COMPLIANCE FORMS
(2) E9.2 COMPLIANCE FORMS

LDA
DESIGNERS & ARCHITECTS

Architect:
LDA Partners, Inc.
Designers & Architects
222 Central Court
Stockton, CA 95204
209.943.0405
www.ldapartners.com

LICENSED ARCHITECT ERIC WILLIAM WOHLE C28388 September 2021 STATE OF CALIFORNIA

Client:
LATHROP-MANTECA FIRE PROTECTION DISTRICT
19001 SOMERSTON PARKWAY
LATHROP CA 95330
209.941.5102

Project:
LATHROP-MANTECA FIRE DISTRICT - STATION 31
800 J STREET
LATHROP CA 95330

Project No.: 757-01-20
Drawn By: A.C.
Checked By: E.W.

No.	Description	Date	By
1	PLAN CHECK #1 1ST REVIEW CYCLE	10-21-2020	
2	PLAN CHECK #2 ADDENDA #1	12-9-2020	

3RD SUBMITTAL - BLDG. DEPT.

12/9/2020

COVER SHEET, PROJECT DATA, GENERAL NOTES, SYMBOLS & ABBREVATIONS

G0.00

12/9/2020 9:32:08 PM

2019 CALIFORNIA GREEN BUILDING STANDARDS CODE

AIA California

NONRESIDENTIAL MANDATORY MEASURES, SHEET 1 (January 2020, Includes August 2019 Supplement)

Y	=	YES
N/A	=	NOT APPLICABLE
RESPON. PARTY	=	RESPONSIBLE PARTY (ie: ARCHITECT, ENGINEER, OWNER, CONTRACTOR, INSPECTOR ETC.)

Y | N/A | RESPON. PARTY

CHAPTER 3
GREEN BUILDING
SECTION 301 GENERAL

301.1 SCOPE. Buildings shall be designed to include the green building measures specified as mandatory in the application checklists contained in this code. Voluntary green building measures are also included in the application checklists and may be included in the design and construction of structures covered by this code, but are not required unless adopted by a city, county, or city and county as specified in Section 101.7.

301.3 NONRESIDENTIAL ADDITIONS AND ALTERATIONS. [BSC-CG] The provisions of individual sections of Chapter 5 apply to newly constructed buildings, building additions of 1,000 square feet or greater, and/or building alterations with a permit valuation of $200,000 or above (for occupancies within the authority of California Building Standards Commission). Code sections relevant to additions and alterations shall only apply to the portions of the building being added or altered within the scope of the permitted work.

A code section will be designated by a banner to indicate where the code section only applies to newly constructed buildings [N] or to additions and/or alterations [A]. When the code section applies to both, no banner will be used.

301.3.1 Nonresidential additions and alterations that cause updates to plumbing fixtures only:

Note: On and after January 1, 2014, certain commercial real property, as defined in Civil Code Section 1101.3, shall have its noncompliant plumbing fixtures replaced with appropriate water-conserving plumbing fixtures under specific circumstances. See Civil Code Section 1101.1 *et seq.* for definitions, types of commercial real property affected, effective dates, circumstances necessitating replacement of noncompliant plumbing fixtures, and duties and responsibilities for ensuring compliance.

301.3.2 Waste Diversion. The requirements of Section 5.408 shall be required for additions and alterations whenever a permit is required for work.

301.4 PUBLIC SCHOOLS AND COMMUNITY COLLEGES. (see GBSC)
301.5 HEALTH FACILITIES. (see GBSC)

SECTION 302 MIXED OCCUPANCY BUILDINGS

302.1 MIXED OCCUPANCY BUILDINGS. In mixed occupancy buildings, each portion of a building shall comply with the specific green building measures applicable to each specific occupancy.

SECTION 303 PHASED PROJECTS

303.1 PHASED PROJECTS. For shell buildings and others constructed for future tenant improvements, only those code measures relevant to the building components and systems considered to be new construction (or newly constructed) shall apply.

303.1.1 Initial Tenant improvements. The provisions of this code shall apply only to the initial tenant improvements to a project. Subsequent tenant improvements shall comply with the scoping provisions in Section 301.3 non-residential additions and alterations.

ABBREVIATION DEFINITIONS:

HCD	Department of Housing and Community Development
BSC	California Building Standards Commission
DSA-SS	Division of the State Architect, Structural Safety
OSHPD	Office of Statewide Health Planning and Development
LR	Low Rise
HR	High Rise
AA	Additions and Alterations
N	New

CHAPTER 5
NONRESIDENTIAL MANDATORY MEASURES

DIVISION 5.1 PLANNING AND DESIGN

SECTION 5.101 GENERAL
5.101.1 SCOPE
The provisions of this chapter outline planning, design and development methods that include environmentally responsible site selection, building design, building siting and development to protect, restore and enhance the environmental quality of the site and respect the integrity of adjacent properties.

SECTION 5.102 DEFINITIONS
5.102.1 DEFINITIONS
The following terms are defined in Chapter 2 *(and are included here for reference)*

CUTOFF LUMINAIRES. Luminaires whose light distribution is such that the candela per 1000 lamp lumens does not numerically exceed 25 (2.5 percent) at an angle of 90 degrees above nadir, and 100 (10 percent) at a vertical angle of 80 degrees above nadir. This applies to all lateral angles around the luminaire.

LOW-EMITTING AND FUEL EFFICIENT VEHICLES.
Eligible vehicles are limited to the following:

1. Zero emission vehicle (ZEV), including neighborhood electric vehicles (NEV), partial zero emission vehicle (PZEV), advanced technology PZEV (AT ZEV) or CNG fueled (original equipment manufacturer only) regulated under Health and Safety Code section 43800 and CCR, Title 13, Sections 1961 and 1962.
2. High-efficiency vehicles, regulated by U.S. EPA, bearing High-Occupancy Vehicle (HOV) car pool lane stickers issued by the Department of Motor Vehicles.

NEIGHBORHOOD ELECTRIC VEHICLE (NEV). A motor vehicle that meets the definition of "low-speed vehicle" either in Section 385.5 of the Vehicle Code or in 49CFR571.500 (as it existed on July 1, 2000), and is certified to zero-emission vehicle standards.

TENANT-OCCUPANTS. Building occupants who inhabit a building during its normal hours of operation as permanent occupants, such as employees, as distinguished from customers and other transient visitors.

VANPOOL VEHICLE. Eligible vehicles are limited to any motor vehicle, other than a motortruck or truck tractor, designed for carrying more than 10 but not more than 15 persons including the driver, which is maintained and used primarily for the nonprofit work-related transportation of adults for the purpose of ridesharing.

Note: Source: Vehicle Code, Division 1, Section 668

ZEV. Any vehicle certified to zero-emission standards.

SECTION 5.106 SITE DEVELOPMENT

☒ Y ☐ N/A

5.106.1 STORM WATER POLLUTION PREVENTION FOR PROJECTS THAT DISTURB LESS THAN ONE ACRE OF LAND. Newly constructed projects and additions which disturb less than one acre of land, and are not part of a larger common plan of development or sale, shall prevent the pollution of storm water runoff from the construction activities through one or more of the following measures:

5.106.1.1 Local ordinance. Comply with a lawfully enacted storm water management and/or erosion control ordinance.

5.106.1.2 Best Management Practices (BMPs). Prevent the loss of soil through wind or water erosion by implementing an effective combination of erosion and sediment control and good housekeeping BMPs.

1. Soil loss BMPs that should be considered for implementation as appropriate for each project include, but are not limited to, the following:
   a. Scheduling construction activity during dry weather, when possible.
   b. Preservation of natural features, vegetation, soil, and buffers around surface waters.
   c. Drainage swales or lined ditches to control stormwater flow.
   d. Mulching or hydroseeding to stabilize disturbed soils.
   e. Erosion control to protect slopes.
   f. Protection of storm drain inlets (gravel bags or catch basin inserts).
   g. Perimeter sediment control (perimeter silt fence, fiber rolls).
   h. Sediment trap or sediment basin to retain sediment on site.
   i. Stabilized construction exits.
   j. Wind erosion control.
   k. Other soil loss BMPs acceptable to the enforcing agency.
2. Good housekeeping BMPs to manage construction equipment, materials, non-stormwater discharges and wastes that should be considered for implementation as appropriate for each project include, but are not limited to, the following:
   a. Dewatering activities.
   b. Material handling and waste management.
   c. Building materials stockpile management.
   d. Management of washout areas (concrete, paints, stucco, etc.).
   e. Control of vehicle/equipment fueling to contractor's staging area.
   f. Vehicle and equipment cleaning performed off site.
   g Spill prevention and control.
   h. Other housekeeping BMPs acceptable to the enforcing agency.

Y | N/A | RESPON. PARTY

☒ Y ☐ N/A

5.106.2 STORMWATER POLLUTION PREVENTION FOR PROJECTS THAT DISTURB ONE OR MORE ACRES OF LAND. Comply with all lawfully enacted stormwater discharge regulations for projects that (1) disturb one acre or more of land, or (2) disturb less than one acre of land but are part of a larger common plan of development sale.

Note: Projects that (1) disturb one acre or more of land, or (2) disturb less than one acre of land but are part of the larger common plan of development or sale must comply with the post-construction requirements detailed in the applicable National Pollutant Discharge Elimination System (NPDES) General permit for Stormwater Discharges Associated with Construction and Land Disturbance Activities issued by the State Water Resources Control Board or the Lahontan Regional Water Quality Control Board (for projects in the Lake Tahoe Hydrologic Unit).

The NPDES permits require postconstruction runoff (post-project hydrology) to match the preconstruction runoff (pre-project hydrology) with the installation of postconstruction stormwater management measures. The NPDES permits emphasize runoff reduction through on-site stormwater use, interception, evapotranspiration, and infiltration through nonstructural controls, such as Low Impact Development (LID) practices, and conversation design measures. Stormwater volume that cannot be addressed using nonstructural practices is required to be captured in structural practices and be approved by the enforcing agency.

Refer to the current applicable permits on the State Water Resources Control Board website at: www.waterboards.ca.gov/constructionstormwater. Consideration to the stormwater runoff management measures should be given during the initial design process for appropriate integration into site development.

☒ Y ☐ N/A

5.106.4 BICYCLE PARKING. For buildings within the authority of California Building Standards Commission as specified in Section 103, comply with Section 5.106.4.1. For buildings within the authority of the Division of the State Architect pursuant to Section 105, comply with Section 5.106.4.2

5.106.4.1 Bicycle parking. [BSC-CG] Comply with Sections 5.106.4.1.1 and 5.106.4.1.2; or meet the applicable local ordinance, whichever is stricter.

5.106.4.1.1 Short-term bicycle parking. If the new project or an addition or alteration is anticipated to generate visitor traffic, provide permanently anchored bicycle racks within 200 feet of the visitors' entrance, readily visible to passers-by, for 5% of new visitor motorized vehicle parking spaces being added, with a minimum of one two-bike capacity rack.
Exception: Additions or alterations which add nine or less visitor vehicular parking spaces.

5.106.4.1.2 Long-term bicycle parking. For new buildings with tenant spaces that have 10 or more tenant-occupants, provide secure bicycle parking for 5 percent of the tenant-occupant vehicular parking spaces with a minimum of one bicycle parking facility.

5.106.4.1.3 For additions or alterations that add 10 or more tenant-occupant vehicular parking spaces, provide secure bicycle parking for 5 percent of the tenant vehicular parking spaces being added, with a minimum of one bicycle parking facility.

5.106.4.1.4 For new shell buildings in phased projects provide secure bicycle parking for 5 percent of the anticipated tenant-occupant vehicular parking spaces with a minimum of one bicycle parking facility.

5.106.4.1.5 Acceptable bicycle parking facility for Sections 5.106.4.1.2, 5.106.4.1.3, and 5.106.4.1.4 shall be convenient from the street and shall meet one of the following:

1. Covered, lockable enclosures with permanently anchored racks for bicycles;
2. Lockable bicycle rooms with permanently anchored racks; or
3. Lockable, permanently anchored bicycle lockers.

Note: Additional information on recommended bicycle accommodations may be obtained from Sacramento Area Bicycle Advocates.

5.106.4.2 Bicycle parking. [DSA-SS] For public schools and community colleges, comply with Sections 5.106.4.2.1 and 5.106.4.2.2

5.106.4.2.1 Student bicycle parking. Provide permanently anchored bicycle racks conveniently accessed with a minimum of four two-bike capacity racks per new building.
5.106.4.2.2 Staff bicycle parking. Provide permanent, secure bicycle parking conveniently accessed with a minimum of two staff bicycle parking spaces per new building. Acceptable bicycle parking facilities shall be convenient from the street or staff parking area and shall meet one of the following:

1. Covered, lockable enclosures with permanently anchored racks for bicycles;
2. Lockable bicycle rooms with permanently anchored racks; or
3. Lockable, permanently anchored bicycle lockers.

☐ Y ☒ N/A

5.106.5.2 DESIGNATED PARKING FOR CLEAN AIR VEHICLES. In new projects or additions or alterations that add 10 or more vehicular parking spaces, provide designated parking for any combination of low-emitting, fuel-efficient and carpool/van pool vehicles as follows:

TABLE 5.106.5.2 - PARKING	
TOTAL NUMBER OF PARKING SPACES	**NUMBER OF REQUIRED SPACES**
0-9	0
10-25	1
25-50	3
51-75	6
76-100	8
101-150	11
151-200	16
201 AND OVER	AT LEAST 8% OF TOTAL

5.106.5.2.1 - Parking stall marking. Paint, in the paint used for stall striping, the following characters such that the lower edge of the last word aligns with the end of the stall striping and is visible beneath a parked vehicle: CLEAN AIR / VAN POOL / EV

Note: Vehicles bearing Clean Air Vehicle stickers from expired HOV lane programs may be considered eligible for designated parking spaces.

☐ Y ☒ N/A

5.106.5.3 Electric vehicle (EV) charging. [N] Construction shall comply with Section 5.106.5.3.1 or Section 5.106.5.3.2 to facilitate future installation of electric vehicle supply equipment (EVSE). When EVSE(s) is/are installed, it shall be in accordance with the *California Building Code,* the *California Electrical Code* and as follows:

5.106.5.3.1 Single charging space requirements. [N] When only a single charging space is required per Table 5.106.5.3.3, a raceway is required to be installed at the time of construction and shall be installed in accordance with the *California Electrical Code.* Construction plans and specifications shall include, but are not limited to, the following:

1. The type and location of the EVSE.
2. A listed raceway capable of accommodating a 208/240 -volt dedicated branch circuit.
3. The raceway shall not be less than trade size 1".
4. The raceway shall originate at a service panel or a subpanel serving the area, and shall terminate in close proximity to the proposed location of the charging equipment and listed suitable cabinet, box, enclosure or equivalent.
5. The service panel or subpanel shall have sufficient capacity to accommodate a minimum 40-ampere dedicated branch circuit for the future installation of the EVSE.

5.106.5.3.2 Multiple charging space requirements. [N] When multiple charging spaces are required per Table 5.106.5.3.3 raceway(s) is/are required to be installed at the time of construction and shall be installed in accordance with the *California Electrical Code.* Construction plans and specifications shall include, but are not limited to, the following:

1. The type and location of the EVSE.
2. The raceway(s) shall originate at a service panel or a subpanel(s) serving the area, and shall terminate in close proximity to the proposed location of the charging equipment and into listed suitable cabinet(s), box(es), enclosure(s) or equivalent.
3. Plan design shall be based upon 40-ampere minimum branch circuits.
4. Electrical calculations shall substantiate the design of the electrical system, to include the rating of equipment and any on-site distribution transformers and have sufficient capacity to simultaneously charge all required EVs at its full rated amperage.
5. The service panel or subpanel(s) shall have sufficient capacity to accommodate the required number of dedicated branch circuit(s) for the future installation of the EVSE.

5.106.5.3.3 EV charging space calculations. [N] Table 5.106.5.3.3 shall be used to determine if single or multiple charging space requirements apply for the future installation of EVSE.

Exceptions: On a case-by-case basis where the local enforcing agency has determined EV charging and infrastructure is not feasible based upon one or more of the following conditions:

Y | N/A | RESPON. PARTY

1. Where there is insufficient electrical supply.
2. Where there is evidence suitable to the local enforcing agency substantiating that additional local utility infrastructure design requirements, directly related to the implementation of Section 5.106.5.3, may adversely impact the construction cost of the project.

TABLE 5.106.5.3.3	
TOTAL NUMBER OF PARKING SPACES	**NUMBER OF REQUIRED SPACES**
0-9	0
10-25	1
26-50	2
51-75	4
76-100	5
101-150	7
151-200	10
201 AND OVER	6% of total[1]

1. Calculation for spaces shall be rounded up to the nearest whole number.

5.106.5.3.4 [N] Identification. The service panel or subpanel(s) circuit directory shall identify the reserved overcurrent protective device space(s) for future EV charging as "EV CAPABLE". The raceway termination location shall be permanently and visibly marked as "EV CAPABLE".

5.106.5.3.5 [N] Future charging spaces qualify as designated parking as described in Section 5.106.5.2 Designated parking for clean air vehicles.

☒ Y ☐ N/A

5.106.8 LIGHT POLLUTION REDUCTION. [N].I Outdoor lighting systems shall be designed and installed to comply with the following:

1. The minimum requirements in the California Energy Code for Lighting Zones 0-4 as defined in Chapter 10, Section 10-114 of the California Administrative Code; and
2. Backlight (B) ratings as defined in IES TM-15-11 (shown in Table A-1 in Chapter 8);
3. Uplight and Glare ratings as defined in California Energy Code (shown in Tables 130.2-A and 130.2-B in Chapter 8) and
4. Allowable BUG ratings not exceeding those shown in Table 5.106.8, [N] or Comply with a local ordinance lawfully enacted pursuant to Section 101.7, whichever is more stringent.

Exceptions: [N]

1. Luminaires that qualify as exceptions in Section 140.7 of the California Energy Code.
2. Emergency lighting.
3. Building facade meeting the requirements in Table 140.7-B of the California Energy Code, Part 6.
4. Custom lighting features as allowed by the local enforcing agency, as permitted by Section 101.8 Alternate materials, designs and methods of construction.

Note: [N]
1. See also California Building Code, Chapter 12, Section 1205.6 for college campus lighting requirements for parking facilities and walkways.
2. Refer to Chapter 8 (Compliance Forms, Worksheets and Reference Material) for IES TM-15-11 Table A-1, California Energy Code Tables 130.2-A and 130.2-B.
3. Refer to the California Building Code for requirements for additions and alterations.

TABLE 5.106.8 [N] MAXIMUM ALLOWABLE BACKLIGHT, UPLIGHT AND GLARE (BUG) RATINGS [1,2]

ALLOWABLE RATING	LIGHTING ZONE LZ0	LIGHTING ZONE LZ1	LIGHTING ZONE LZ2	LIGHTING ZONE LZ3	LIGHTING ZONE LZ4
MAXIMUM ALLOWABLE BACKLIGHT RATING [3]					
Luminaire greater than 2 mounting heights (MH) from property line	N/A	No Limit	No Limit	No Limit	No Limit
Luminaire back hemisphere is 1-2 MH from property line	N/A	B2	B3	B4	B4
Luminaire back hemisphere is 0.5-1 MH from property line	N/A	B1	B2	B3	B3
Luminaire back hemisphere is less than 0.5 MH from property line	N/A	B0	B0	B1	B2
MAXIMUM ALLOWABLE UPLIGHT RATING (U)					
For area lighting [4]	N/A	U0	U0	U0	U0
For all other outdoor lighting,including decorative luminaires	N/A	U1	U2	U3	UR
MAXIMUM ALLOWABLE GLARE RATING [5] (G)					
Luminaire greater than 2 MH from property line	N/A	G1	G2	G3	G4
Luminaire front hemisphere is 1-2 MH from property line	N/A	G0	G1	G1	G2
Luminaire front hemisphere is 0.5-1 MH from property line	N/A	G0	G0	G1	G1
Luminaire back hemisphere is less than 0.5 MH from property line	N/A	G0	G0	G0	G1

1. IESNA Lighting Zones 0 and 5 are not applicable; refer to Lighting Zones as defined in the *California Energy Code* and Chapter 10 of the *California Administrative Code.*

2. For property lines that abut public walkways, bikeways, plazas and parking lots, the property line may be considered to be 5 feet beyond the actual property line for purpose of determining compliance with this section. For property lines that abut public roadways and public transit corridors, the property line may be considered to be the centerline of the public roadway or public transit corridor for the purpose of determining compliance with this section.

3. If the nearest property line is less than or equal to two mounting heights from the back hemisphere of the luminaire distribution, the applicable reduced Backlight rating shall be met.

4. General lighting luminaires in areas such as outdoor parking, sales or storage lots shall meet these reduced ratings. Decorative luminaires located in these areas shall meet *U*-value limits for "all other outdoor lighting".

5. If the nearest property line is less than or equal to two mounting heights from the front hemisphere of the luminaire distribution, the applicable reduced Glare rating shall be met.

☐ Y ☒ N/A

5.106.10 GRADING AND PAVING. Construction plans shall indicate how site grading or a drainage system will manage all surface water flows to keep water from entering buildings. Examples of methods to manage surface water include, but are not limited to, the following:

1. Swales.
2. Water collection and disposal systems.
3. French drains.
4. Water retention gardens.
5. Other water measures which keep surface water away from buildings and aid in groundwater recharge.

Exception: Additions and alterations not altering the drainage path.

Y | N/A | RESPON. PARTY

☐ Y ☒ N/A

5.106.12 SHADE TREES [DSA-SS]. Shade Trees shall be planted to comply with Sections 5.106.12.1, 5.106.12.2, and 5.106.12.3. Percentages shown shall be measured at noon on the summer solstice. Landscape irrigation necessary to establish and maintain tree health shall comply with Section 5.304.6.

5.106.12.1 Surface parking areas. Shade tree plantings, minimum #10 container size or equal, shall be installed to provide shade over 50 percent of the parking area within 15 years.

Exceptions: The surface parking area covered by solar photovoltaic shade structures, or shade structures, with roofing materials that comply with Table A5.106.11.2.2 in Appendix A5, are not included in the total area calculations.

5.106.12.2 Landscape areas. Shade tress plantings, minimum #10 container size or equal shall be installed to provide shade of 20% of the landscape area within 15 years.

Exceptions: Playfields for organized sport activity are not included in the total area calculation.

5.106.12.3. Hardscape areas. Shade tree plantings, minimum #10 container size or equal shall be installed to provide shade over 20 percent of the hardscape area within 15 years.

Exceptions: Walks, hardscape areas covered by solar photovoltaic shade structures, and hardscape areas covered by shade structures with roofing materials that comply with Table A5.106.11.2.2 in Appendix A5, are not included in the total area calculation.

DIVISION 5.2 ENERGY EFFICIENCY

SECTION 5.201 GENERAL
5.201.1 Scope [BSC-CG]. ***California Energy Code [DSA-SS].*** For the purposes of mandatory energy efficiency standards in this code, the California Energy Commission will continue to adopt mandatory building standards.

DIVISION 5.3 WATER EFFICIENCY AND CONSERVATION

SECTION 5.301 GENERAL
5.301.1 Scope. The provisions of this chapter shall establish the means of conserving water use indoors, outdoors and in wastewater conveyance.

SECTION 5.302 DEFINITIONS
5.302.1 Definitions. The following terms are defined in Chapter 2 *(and are included here for reference)*

EVAPOTRANSPIRATION ADJUSTMENT FACTOR (ETAF) [DSA-SS]. An adjustment factor when applied to reference evapotranspiration that adjusts for plant factors and irrigation efficiency, which ae two major influences on the amount of water that needs to be applied to the landscape.

FOOTPRINT AREA [DSA-SS]. The total area of the furthest exterior wall of the structure projected to natural grade, not including exterior areas such as stairs, covered walkways, patios and decks.

METERING FAUCET. A self-closing faucet that dispenses a specific volume of water for each actuation cycle. The volume or cycle duration can be fixed or adjustable.

GRAYWATER. Pursuant to Health and Safety Code Section 17922.12, "graywater" means untreated wastewater that has not been contaminated by any toilet discharge, has not been affected by infectious, contaminated, or unhealthy bodily wastes, and does not present a threat from contamination by unhealthful processing, manufacturing, or operating wastes. "Graywater" includes, but is not limited to wastewater from bathtubs, showers, bathroom washbasins, clothes washing machines and laundry tubs, but does not include waste water from kitchen sinks or dishwashers.

MODEL WATER EFFICIENT LANDSCAPE ORDINANCE (MWELO). The California ordinance regulating landscape design, installation and maintenance practices that will ensure commercial, multifamily and other developer installed landscapes greater than 2500 square feet meet an irrigation water budget developed based on landscaped area and climatological parameters.

MODEL WATER EFFICIENT LANDSCAPE ORDINANCE (MWELO). [HCD] The California model ordinance (California Code of Regulations, Title 23, Division 2, Chapter 2.7), regulating landscape design, installation and maintenance practices. Local agencies are required to adopt the updated MWELO, or adopt a local ordinance at least as effective as the MWELO.

POTABLE WATER. Water that is drinkable and meets the U.S. Environmental Protection Agency (EPA) Drinking Water Standards. See definition in the California Plumbing Code, Part 5.

POTABLE WATER. [HCD] Water that is satisfactory for drinking, culinary, and domestic puroses, and meets the U.S. Environmental Protection Agency (EPA) Drinking Water Standards and the requirements of the Health Authority Having Jurisdiction.

RECYCLED WATER. Water which, as a result of treatment of waste, is suitable for a direct beneficial use or a controlled use that would not otherwise occur [Water Code Section 13050 (n)]. Simply put, recycled water is water treated to remove waste matter attaining a quality that is suitable to use the water again.

SUBMETER. A meter installed subordinate to a site meter. Usually used to measure water intended for one purpose, such as landscape irrigation. For the purposes of CALGreen, a dedicated meter may be considered a submeter.

WATER BUDGET. Is the estimated total landscape irrigation water use which shall not exceed the maximum applied water allowance calculated in accordance with the Department of Water Resources Model Efficient Landscape Ordinance (MWELO).

SECTION 5.303 INDOOR WATER USE

☐ Y ☒ N/A

5.303.1 METERS. Separate submeters or metering devices shall be installed for the uses described in Sections 503.1.1 and 503.1.2.

5.303.1.1 Buildings in excess of 50,000 square feet. Separate submeters shall be installed as follows:

1. For each individual leased, rented or other tenant space within the building projected to consume more than 100 gal/day (380 L/day), including, but not limited to, spaces used for laundry or cleaners, restaurant or food service, medical or dental office, laboratory, or beauty salon or barber shop.
2. Where separate submeters for individual building tenants are unfeasible, for water supplied to the following subsystems:
   a. Makeup water for cooling towers where flow through is greater than 500 gpm (30 L/s).
   b. Makeup water for evaporative coolers greater than 6 gpm (0.04 L/s).
   c. Steam and hot water boilers with energy input more than 500,000 Btu/h (147 kW).

5.303.1.2 Excess consumption. A separate submeter or metering device shall be provided for any tenant within a new building or within an addition that is projected to consume more than 1,000 gal/day.

☒ Y ☐ N/A

5.303.3 WATER CONSERVING PLUMBING FIXTURES AND FITTINGS. Plumbing fixtures (water closets and urinals) and fittings (faucets and showerheads) shall comply with the following:

5.303.3.1 Water Closets. The effective flush volume of all water closets shall not exceed 1.28 gallons per flush. Tank-type water closets shall be certified to the performance criteria of the U.S. EPA WaterSense Specification for Tank-Type toilets.

Note: The effective flush volume of dual flush toilets is defined as the composite, average flush volume of two reduced flushes and one full flush.

5.303.3.2 Urinals.
5.303.3.2.1 Wall-mounted Urinals. The effective flush volume of wall-mounted urinals shall not exceed 0.125 gallons per flush.

5.303.3.2.2 Floor-mounted Urinals. The effective flush volume of floor-mounted or other urinals shall not exceed 0.5 gallons per flush.

5.303.3.3 Showerheads. [BSC-CG]
5.303.3.3.1 Single showerhead. Showerheads shall have a maximum flow rate of not more than 1.8 gallons per minute at 80 psi. Showerheads shall be certified to the performance criteria of the U.S. EPA WaterSense Specification for Showerheads.

5.303.3.3.2 Multiple showerheads serving one shower. When a shower is served by more than one showerhead, the combined flow rate of all the showerheads and/or other shower outlets controlled by a single valve shall not exceed 1.8 gallons per minute at 80 psi, or the shower shall be designed to allow only one shower outlet to be in operation at a time.
Note: A hand-held shower shall be considered a showerhead.

DISCLAIMER: *THIS DOCUMENT IS PROVIDED AND INTENDED TO BE USED AS A MEANS TO INDICATE AREAS OF COMPLIANCE WITH THE CALIFORNIA GREEN BUILDING STANDARDS (CALGREEN) CODE. DUE TO THE VARIABLES BETWEEN BUILDING DEPARTMENT JURISDICTIONS, THIS CHECKLIST IS TO BE USED ON AN INDIVIDUAL PROJECT BASIS AND MAY BE MODIFIED BY THE END USER TO MEET THOSE INDIVIDUAL NEEDS. THE END USER ASSUMES ALL RESPONSIBILITY ASSOCIATED WITH THE USE OF THIS DOCUMENT, INCLUDING VERIFICATION WITH THE FULL CODE.*

12/9/2020 8:47:30 PM

LDA
DESIGNERS & ARCHITECTS

Architect:
LDA Partners, Inc.
Designers & Architects
222 Central Court
Stockton, CA 95204
209.943.0405
www.ldapartners.com

LICENSED ARCHITECT
ERIC WILLIAM WOLFE
C28388
September 2021
STATE OF CALIFORNIA

Client:
LATHROP-MANTECA FIRE PROTECTION DISTRICT
19001 SOMERSTON PARKWAY
LATHROP, CA 95330
209.941.5102

Project:
FIRE STATION 31 UPGRADES

800 J STREET
LATHROP CA 95330

Project No.: 757-01-20
Drawn By: A.C.
Checked By: E.W.

No. Description Date By

3RD SUBMITTAL - BLDG. DEPT.

12/9/2020

CALGREEN CHECKLIST

G1.00

AIA California

2019 CALIFORNIA GREEN BUILDING STANDARDS CODE

NONRESIDENTIAL MANDATORY MEASURES, SHEET 1 (January 2020, Includes August 2019 Supplement)

Y	=	YES
N/A	=	NOT APPLICABLE
RESPON. PARTY	=	RESPONSIBLE PARTY (ie: ARCHITECT, ENGINEER, OWNER, CONTRACTOR, INSPECTOR ETC.)

(Checklist columns: Y / N/A / RESPON. PARTY)

5.303.3.4 Faucets and fountains.

5.303.3.4.1 Nonresidential Lavatory faucets. Lavatory faucets shall have a maximum flow rate of not more than 0.5 gallons per minute at 60 psi.

5.303.3.4.2 Kitchen faucets. Kitchen faucets shall have a maximum flow rate of not more than 1.8 gallons per minute at 60 psi. Kitchen faucets may temporarily increase the flow above the maximum rate, but not to exceed 2.2 gallons per minute at 60 psi, and must default to a maximum flow rate of 1.8 gallons per minute at 60 psi.

5.303.3.4.3 Wash fountains. Wash fountains shall have a maximum flow rate of not more than1.8 gallons per minute/20 [rim space (inches) at 60 psi].

5.303.3.4.4 Metering faucets. Metering faucets shall not deliver more than 0.20 gallons per cycle.

5.303.3.4.5 Metering faucets for wash fountains. Metering faucets for wash fountains shall have a maximum flow rate of not more than 0.20 gallons per minute/20 [rim space (inches) at 60 psi].

Note: Where complying faucets are unavailable, aerators or other means may be used to achieve reduction.

Y ☐ N/A ☒ — **5.303.4 COMMERCIAL KITCHEN EQUIPMENT.**

5.303.4.1 Food Waste Disposers. Disposers shall either modulate the use of water to no more than 1 gpm when the disposer is not in use (not actively grinding food waste/no-load) or shall automatically shut off after no more than 10 minutes of inactivity. Disposers shall use no more than 8 gpm of water.
Note: This code section does not affect local jurisdiction authority to prohibit or require disposer installation.

Y ☒ N/A ☐ — **5.303.5 AREAS OF ADDITION OR ALTERATION.** For those occupancies within the authority of the California Building Standards Commission as specified in Section 103, the provisions of Section 5.303.3 and 5.303.4 shall apply to new fixtures in additions or areas of alteration to the building.

Y ☒ N/A ☐ — **5.303.6 STANDARDS FOR PLUMBING FIXTURES AND FITTINGS.** Plumbing fixtures and fittings shall be installed in accordance with the *California Plumbing Code*, and shall meet the applicable standards referenced in Table 1701.1 of the *California Plumbing Code* and in Chapter 6 of this code.

SECTION 5.304 OUTDOOR WATER USE

Y ☐ N/A ☒ — **5.304.1 OUTDOOR POTABLE WATER USE IN LANDSCAPE AREAS.** Nonresidential developments shall comply with a local water efficient landscape ordinance or the current California Department of Water Resources' Model Water Efficient Landscape Ordinance (MWELO), whichever is more stringent.

Notes:
1. The Model Water Efficient Landscape Ordinance (MWELO) is located in the California Code of Regulations, Title 23, Chapter 2.7, Division 2.
2. MWELO and supporting documents, including a water budget calculator, are available at: https://www.water.ca.gov/.

Y ☐ N/A ☒ — **5.304.6 OUTDOOR POTABLE WATER USE IN LANDSCAPE AREAS.** For public schools and community colleges, landscape projects as described in Sections 5.304.6.1 and 5.304.6.2 shall comply with the California Department of Water Resources Model Water Efficient Landscape Ordinance (MWELO) commencing with Section 490 of Chapter 2.7, Division 2, Title 23, California Code of Regulations, except that the evapotranspiration adjustment factor (ETAF) shall be 0.65 with an additional water allowance for special landscape areas (SLA) of 0.35.

Exception: Any project with an aggregate landscape area of 2,500 square feet or less may comply with the prescriptive measures contained in Appendix D of the MWELO.

5.304.6.1 Newly constructed landscapes. New construction projects with an aggregate landscape area equal to or greater than 500 square feet.

5.304.6.2 Rehabilitated landscapes. Rehabilitated landscape projects with an aggregate landscape area equal to or greater than 1,200 square feet.

DIVISION 5.4 MATERIAL CONSERVATION AND RESOURCE EFFICIENCY

SECTION 5.401 GENERAL

5.401.1 SCOPE. The provisions of this chapter shall outline means of achieving material conservation and resource efficiency through protection of buildings from exterior moisture, construction waste diversion, employment of techniques to reduce pollution through recycling of materials, and building commissioning or testing and adjusting.

SECTION 5.402 DEFINITIONS

5.402.1 DEFINITIONS. The following terms are defined in Chapter 2 *(and are included here for reference)*

ADJUST. To regulate fluid flow rate and air patterns at the terminal equipment, such as to reduce fan speed or adjust a damper.

BALANCE. To proportion flows within the distribution system, including sub-mains, branches and terminals, according to design quantities.

BUILDING COMMISSIONING. A systematic quality assurance process that spans the entire design and construction process, including verifying and documenting that building systems and components are planned, designed, installed, tested, operated and maintained to meet the owner's project requirements.

ORGANIC WASTE. Food waste, green waste, landscape and pruning wste, nonhazardous wood waste, and food soiled paper waste that is mixed in with food waste.

TEST. A procedure to determine quantitative performance of a system or equipment

SECTION 5.407 WATER RESISTANCE AND MOISTURE MANAGEMENT

5.407.1 WEATHER PROTECTION. Provide a weather-resistant exterior wall and foundation envelope as required by California Building Code Section 1402.2 (Weather Protection), manufacturer's installation instructions or local ordinance, whichever is more stringent.

Y ☐ N/A ☒ — **5.407.2 MOISTURE CONTROL.** Employ moisture control measures by the following methods.

5.407.2.1 Sprinklers. Design and maintain landscape irrigation systems to prevent spray on structures.

5.407.2.2 Entries and openings. Design exterior entries and/or openings subject to foot traffic or wind-driven rain to prevent water intrusion into buildings as follows:

5.407.2.2.1 Exterior door protection. Primary exterior entries shall be covered to prevent water intrusion by using nonabsorbent floor and wall finishes within at least 2 feet around and perpendicular to such openings plus at least one of the following:

1. An installed awning at least 4 feet in depth.
2. The door is protected by a roof overhang at least 4 feet in depth.
3. The door is recessed at least 4 feet.
4. Other methods which provide equivalent protection.

5.407.2.2.2 Flashing. Install flashings integrated with a drainage plane.

SECTION 5.408 CONSTRUCTION WASTE REDUCTION, DISPOSAL AND RECYCLING

Y ☒ N/A ☐ — **5.408.1 CONSTRUCTION WASTE MANAGEMENT.** Recycle and/or salvage for reuse a minimum of 65% of the non-hazardous construction and demolition waste in accordance with Section 5.408.1.1, 5.408.1.2 or 5.408.1.3; or meet a local construction and demolition waste management ordinance, whichever is more stringent.

5.408.1.1 Construction waste management plan. Where a local jurisdiction does not have a construction and demolition waste management ordinance, submit a construction waste management plan that:

1. Identifies the construction and demolition waste materials to be diverted from disposal by efficient usage, recycling, reuse on the project or salvage for future use or sale.
2. Determines if construction and demolition waste materials will be sorted on-site (source-separated) or bulk mixed (single stream).
3. Identifies diversion facilities where construction and demolition waste material collected will be taken.
4. Specifies that the amount of construction and demolition waste materials diverted shall be calculated by weight or volume, but not by both.

5.408.1.2 Waste Management Company. Utilize a waste management company that can provide verifiable documentation that the percentage of construction and demolition waste material diverted from the landfill complies with this section.

Note: The owner or contractor shall make the determination if the construction and demolition waste material will be diverted by a waste management company.

Exceptions to Sections 5.408.1.1 and 5.408.1.2:

1. Excavated soil and land-clearing debris.
2. Alternate waste reduction methods developed by working with local agencies if diversion or recycle facilities capable of compliance with this item do not exist.
3. Demolition waste meeting local ordinance or calculated in consideration of local recycling facilities and markets.

5.408.1.3 Waste stream reduction alternative. The combined weight of new construction disposal that does not exceed two pounds per square foot of building area may be deemed to meet the 65% minimum requirement as approved by the enforcing agency.

5.408.1.4 Documentation. Documentation shall be provided to the enforcing agency which demonstrates compliance with Sections 5.408.1.1, through 5.408.1.3. The waste management plan shall be updated as necessary and shall be accessible during construction for examination by the enforcing agency.

Notes:

1. Sample forms found in "A Guide to the California Green Building Standards Code (Nonresidential)" located at www.bsc.ca.gov/Home/CALGreen.aspx may be used to assist in documenting compliance with the waste management plan.
2. Mixed construction and demolition debris processors can be located at the California Department of Resources Recycling and Recovery (CalRecycle).

Y ☒ N/A ☐ — **5.408.2 UNIVERSAL WASTE. [A]** Additions and alterations to a building or tenant space that meet the scoping provisions in Section 301.3 for nonresidential additions and alterations, shall require verification that Universal Waste items such as fluorescent lamps and ballast and mercury containing thermostats as well as other California prohibited Universal Waste materials are disposed of properly and are diverted from landfills. A list of prohibited Universal Waste materials shall be included in the construction documents.

Note: Refer to the Universal Waste Rule link at: http://www.dtsc.ca.gov/LawsRegsPolicies/Regs/upload/OEAR-A_REGS_UWR_FinalText.pdf

Y ☒ N/A ☐ — **5.408.3 EXCAVATED SOIL AND LAND CLEARING DEBRIS.** 100 percent of trees, stumps, rocks and associated vegetation and soils resulting primarily from land clearing shall be reused or recycled. For a phased project, such material may be stockpiled on site until the storage site is developed.

Exception: Reuse, either on or off-site, of vegetation or soil contaminated by disease or pest infestation.

Notes:

1. If contamination by disease or pest infestation is suspected, contact the County Agricultural Commissioner and follow its direction for recycling or disposal of the material.
2. For a map of know pest and/or disease quarantine zones, consult with the California Department of Food and Agriculture. (www.cdfa.ca.gov)

SECTION 5.410 BUILDING MAINTENANCE AND OPERATIONS

Y ☒ N/A ☐ — **5.410.1 RECYCLING BY OCCUPANTS.** Provide readily accessible areas that serve the entire building and are identified for the depositing, storage and collection of non-hazardous materials for recycling, including (at a minimum) paper, corrugated cardboard, glass, plastics, organic waste, and metals or meet a lawfully enacted local recycling ordinance, if more restrictive.

Exception: Rural jurisdictions that meet and apply for the exemption in Public Resources Code 42649.82 (a)(2)(A) et seq. shall also be exempt from the organic waste portion of this section.

5.410.1.1 Additions. All additions conducted within a 12-month period under single or multiple permits, resulting in an increase of 30% or more in floor area, shall provide recycling areas on site.

Exception: Additions within a tenant space resulting in less than a 30% increase in the tenant space floor area.

5.410.1.2 Sample ordinance. Space allocation for recycling areas shall comply with Chapter 18, Part 3, Division 30 of the *Public Resources Code*. Chapter 18 is known as the California Solid Waste Reuse and Recycling Access Act of 1991 (Act).

Note: A sample ordinance for use by local agencies may be found in Appendix A of the document at the CalRecycle's web site.

Y ☐ N/A ☒ — **5.410.2 COMMISSIONING. [N] New buildings 10,000 square feet and over.** For new buildings 10,000 square feet and over, building commissioning shall be included in the design and construction processes of the building project to verify that the building systems and components meet the owner's or owner representative's project requirements. Commissioning shall be performed in accordance with this section by trained personnel with experience on projects of comparable size and complexity. For I-occupancies that are not regulated by OSHPD or for I-occupancies and L-occupancies that are not regulated y the California Energy Code Section 100.0 Scope, all requirements in Sections 5.410.2 through 5.410.2.6 shall apply.

Note: For energy-related systems under the scope (Section 100) of the California Energy Code, including heating, ventilation, air conditioning (HVAC) systems and controls, indoor lighting systems and controls, as well as water heating systems and controls, refer to California Energy Code Section 120.8 for commissioning requirements

Commissioning requirements shall include:

1. Owner's or Owner representative's project requirements.
2. Basis of design.
3. Commissioning measures shown in the construction documents.
4. Commissioning plan.
5. Functional performance testing.
6. Documentation and training.
7. Commissioning report.

Exceptions:

1. Unconditioned warehouses of any size.
2. Areas less than 10,000 square feet used for offices or other conditioned accessory spaces within unconditioned warehouses.
3. Tenant improvements less than 10,000 square feet as described in Section 303.1.1.
4. Open parking garages of any size, or open parking garage areas, of any size, within a structure.

Note: For the purposes of this section, unconditioned shall mean a building, area, or room which does not provide heating and or air conditioning.

Informational Notes:

1. IAS AC 476 is an accreditation criteria for organizations providing training and/or certification of commissioning personnel. AC 476 is available to the Authority Having Jurisdiction as a reference for qualifications of commissioning personnel. AC 476 des not certify individuals to conduct functional performance tests or to adjust and balance systems.

2. Functional performance testing for heating, ventilation, air conditioning systems and lighting controls must be performed in compliance with the *California Energy Code*.

5.410.2.1 Owner's or Owner Representative's Project Requirements (OPR). [N] The expectations and requirements of the building appropriate to its phase shall be documented before the design phase of the project begins. This documentation shall include the following:
1. Environmental and sustainability goals.
2. Building sustainable goals.
3. Indoor environmental quality requirements.
4. Project program, including facility functions and hours of operation, and need for after hours operation.
5. Equipment and systems expectations.
6. Building occupant and operation and maintenance (O&M) personnel expectations.

5.410.2.2 Basis of Design (BOD). [N] A written explanation of how the design of the building systems meets the OPR shall be completed at the design phase of the building project. The Basis of Design document shall cover the following systems:

1. Renewable energy systems.
2. Landscape irrigation systems.
3. Water reuse system.

5.410.2.3 Commissioning plan. [N] Prior to permit issuance a commissioning plan shall be completed to document how the project will be commissioned. The commissioning plan shall include the following:
1. General project information.
2. Commissioning goals.
3. Systems to be commissioned. Plans to test systems and components shall include:
   a. An explanation of the original design intent.
   b. Equipment and systems to be tested, including the extent of tests.
   c. Functions to be tested.
   d. Conditions under which the test shall be performed.
   e. Measurable criteria for acceptable performance.
4. Commissioning team information.
5. Commissioning process activities, schedules and responsibilities. Plans for the completion of commissioning shall be included.

5.410.2.4 Functional performance testing. [N] Functional performance tests shall demonstrate the correct installation and operation of each component, system and system-to-system interface in accordance with the approved plans and specifications. Functional performance testing reports shall contain information addressing each of the building components tested, the testing methods utilized, and include any readings and adjustments made.

5.410.2.5 Documentation and training. [N] A Systems Manual and Systems Operations Training are required, including Occupational Safety and Health Act (OSHA) requirements in *California Code of Regulations* (CCR), Title 8, Section 5142, and other related regulations.

5.410.2.5.1 Systems manual. [N] Documentation of the operational aspects of the building shall be completed within the systems manual and delivered to the building owner or representative. The systems manual shall include the following:
1. Site information, including facility description, history and current requirements.
2. Site contact information.
3. Basic operations and maintenance, including general site operating procedures, basic troubleshooting, recommended maintenance requirements, site events log.
4. Major systems.
5. Site equipment inventory and maintenance notes.
6. A copy of verifications required by the enforcing agency or this code.
7. Other resources and documentation, if applicable.

5.410.2.5.2 Systems operations training. [N] A program for training of the appropriate maintenance staff for each equipment type and/or system shall be developed and documented in the commissioning report and shall include the following:
1. System/equipment overview (what it is, what it does and with what other systems and/or equipment it interfaces).
2. Review and demonstration of servicing/preventive maintenance.
3. Review of the information in the Systems Manual.
4. Review of the record drawings on the system/equipment.

5.410.2.6 Commissioning report. [N] A report of commissioning process activities undertaken through the design and construction phases of the building project shall be completed and provided to the owner or representative.

Y ☒ N/A ☐ — **5.410.4 TESTING AND ADJUSTING. New buildings less than 10,000 square feet.** Testing and adjusting of systems shall be required for new buildings less than 10,000 square feet or new systems to serve an addition or alteration subject to Section 303.1.

5.410.4.2 (Reserved)

Note: For energy-related systems under the scope (Section 100) of the California Energy Code, including heating, ventilation, air conditioning (HVAC) systems and controls, indoor lighting system and controls, as well as water heating systems and controls, refer to California Energy Code Section 120.8 for commissioning requirements and Sections 120.5, 120.6, 130.4, and 140.9(b)3 for additional testing requirements of specific systems.

5.410.4.2 Systems. Develop a written plan of procedures for testing and adjusting systems. Systems to be included for testing and adjusting shall include at a minimum, as applicable to the project:

1. Renewable energy systems.
2. Landscape irrigation systems.
3. Water reuse systems.

5.410.4.3 Procedures. Perform testing and adjusting procedures in accordance with manufacturer's specifications and applicable standards on each system.

5.410.4.3.1 HVAC balancing. In addition to testing and adjusting, before a new space-conditioning system serving a building or space is operated for normal use, the system shall be balanced in accordance with the procedures defined by the Testing Adjusting and Balancing Bureau National Standards; the National Environmental Balancing Bureau Procedural Standards; Associated Air Balance Council National Standards or as approved by the enforcing agency.

5.410.4.4 Reporting. After completion of testing, adjusting and balancing, provide a final report of testing signed by the individual responsible for performing these services.

5.410.4.5 Operation and maintenance (O & M) manual. Provide the building owner or representative with detailed operating and maintenance instructions and copies of guaranties/warranties for each system. O & M instructions shall be consistent with OSHA requirements in CCR, Title 8, Section 5142, and other related regulations.

5.410.4.5.1 Inspections and reports. Include a copy of all inspection verifications and reports required by the enforcing agency.

DIVISION 5.5 ENVIRONMENTAL QUALITY

SECTION 5.501 GENERAL

5.501.1 SCOPE. The provisions of this chapter shall outline means of reducing the quantity of air contaminants that are odorous, irritating, and/or harmful to the comfort and well-being of a building's installers, occupants and neighbors.

SECTION 5.502 DEFINITIONS

5.502.1 DEFINITIONS. The following terms are defined in Chapter 2 *(and are included here for reference)*

ARTERIAL HIGHWAY. A general term denoting a highway primarily for through traffic usually on a continuous route.

A-WEIGHTED SOUND LEVEL (dBA). The sound pressure level in decibels as measured on a sound level meter using the internationally standardized A-weighting filter or as computed from sound spectral data to which A-weighting adjustments have been made.

1 BTU/HOUR. British thermal units per hour, also referred to as Btu. The amount of heat required to raise one pound of water one degree Fahrenheit per hour, a common measure of heat transfer rate. A ton of refrigeration is 12,000 Btu, the amount of heat required to melt a ton (2,000 pounds) of ice at 32^0 Fahrenheit.

COMMUNITY NOISE EQUIVALENT LEVEL (CNEL). A metric similar to the day-night average sound level (Ldn), except that a 5 decibel adjustment is added to the equivalent continuous sound exposure level for evening hours (7pm to 10pm) in addition to the 10 dB nighttime adjustment used in the Ldn.

COMPOSITE WOOD PRODUCTS. Composite wood products include hardwood plywood, particleboard and medium density fiberboard. "Composite wood products" does not include hardboard, structural plywood, structural panels, structural composite lumber, oriented strand board, glued laminated timber, timber, prefabricated wood I–joists or finger–jointed lumber, all as specified in California Code of Regulations (CCR), Title 17, Section 93120.1(a).

Note: See CCR, Title 17, Section 93120.1.

DAY-NIGHT AVERAGE SOUND LEVEL (Ldn). The A-weighted equivalent continuous sound exposure level for a 24-hour period with a 10 dB adjustment added to sound levels occurring during nighttime hours (10p.m. to 7 a.m.).

DECIBEL (db). A measure on a logarithmic scale of the magnitude of a particular quantity (such as sound pressure, sound power, sound intensity) with respect to a reference quantity.

ELECTRIC VEHICLE (EV). An automotive-type vehicle for on-road use, such as passenger automobiles, buses, trucks, vans, neighborhood electric vehicles, electric motorcycles, and the like, primarily powered by an electric motor that draws current from a rechargeable storage battery, fuel cell, photovoltaic array, or other source of electric current. Plug-in hybrid electric vehicles (PHEV) are considered electric vehicles. For purposes of the *California Electrical Code*, off-road, self-propoelled electric vehicles, such as industrial trucks, hoists, lifts, transports, golf carts, airline ground support equipment, tractors, boats, and the like, are not included.

ELECTRIC VEHICLE CHARGING STATION(S) (EVCSj). One or more spaces intended for charging electric vehicles.

ELECTRIC VEHICLE SUPPLY EQUIPMENT (EVSE). The conductors, including the ungrounded, grounded, and equipment grounding conductors and the electric vehicle connectors, attachment plugs, and all other fittings, devices, power outlets, or apparatus installed specifically for the purpose of transferring energy between the premises wiring and the electric vehicle.

ENERGY EQUIVALENT (NOISE) LEVEL (Leq). The level of a steady noise which would have the same energy as the fluctuating noise level integrated over the time of period of interest.

EXPRESSWAY. An arterial highway for through traffic which may have partial control of access, but which may or may not be divided or have grade separations at intersections.

FREEWAY. A divided arterial highway with full control of access and with grade separations at intersections.

GLOBAL WARMING POTENTIAL (GWP). The radiative forcing impact of one mass-based unit of a given greenhouse gas relative to an equivalent unit of carbon dioxide over a given period of time. Carbon dioxide is the reference compound with a GWP of one.

GLOBAL WARMING POTENTIAL VALUE (GWP VALUE). A 100-year GWP value published by the Intergovernmental Panel on Climate Change (IPCC) in either its Second Assessment Report (SAR) (IPCC, 1995); or its Fourth Assessment A-3 Report (AR4) (IPCC, 2007). The SAR GWP values are found in column "SAR (100-yr)" of Table 2.14.; the AR4 GWP values are found in column "100 yr" of Table 2.14.

HIGH-GWP REFRIGERANT. A compound used as a heat transfer fluid or gas that is: (a) a chlorofluorocarbon, a hdrochlorofluorocarbon, a hydrofluorocarbon, a perfluorocarbon, or any compound or blend of compounds, with a GWP value equal to or greater than 150, or (B) any ozone depleting substance as defined in Title 40 of the Code of Federal Regulations, Part 82, sec.82.3 (as amended March 10, 2009).

LONG RADIUS ELBOW. Pipe fitting installed between two lengths of pipe or tubing to allow a change of direction, with a radius 1.5 times the pipe diameter.

LOW-GWP REFRIGERANT. A compound used as a heat transfer fluid or gas that: (A) has a GWP value less than 150, and (B) is not an ozone depleting substance as defined in Title 40 of the Code of Federal Regulations, Part 82, sec.82.3 (as amended March 10, 2009).

MERV. Filter minimum efficiency reporting value, based on ASHRAE 52.2–1999.

MAXIMUM INCREMENTAL REACTIVITY (MIR). The maximum change in weight of ozone formed by adding a compound to the "Base REactive Organic Gas (ROG) Mixture" per weight of compound added, expressed to hundreths of a gram (g O^3/g ROC).

PRODUCT-WEIGHTED MIR (PWMIR). The sum of all weighted-MIR for all ingredients in a product subject to this article. The PWMIR is the total product reactivity expressed to hundredths of a gram of ozone formed per gram of product (excluding container and packaging).

PSIG. Pounds per square inch, guage.

REACTIVE ORGANIC COMPOUND (ROC). Any compound that has the potential, once emitted, to contribute to ozone formation in the troposphere.

SCHRADER ACCESS VALVES. Access fittings with a valve core installed.

SHORT RADIUS ELBOW. Pipe fitting installed between two lengths of pipe or tubing to allow a change of direction, with a radius 1.0 times the pipe diameter.

SUPERMARKET. For the purposes of Section 5.508.2, a supermarket is any retail food facility with 8,000 square feet or more conditioned area, and that utilizes either refrigerated display cases, or walk-in coolers or freezers connected to remote compressor units or condensing units.

VOC. A volatile organic compound broadly defined as a chemical compound based on carbon chains or rings with vapor pressures greater than 0.1 millimeters of mercury at room temperature. These compounds typically contain hydrogen and may contain oxygen, nitrogen and other elements. See CCR Title 17, Section 94508(a)
.
Note: Where specific regulations are cited from different agencies such as SCAQMD, ARB, etc., the VOC definition included in that specific regulation is the one that prevails for the specific measure in question.

SECTION 5.503 FIREPLACES

Y ☐ N/A ☒ — **5.503.1 FIREPLACES.** Install only a direct-vent sealed-combustion gas or sealed wood-burning fireplace, or a sealed woodstove or pellet stove, and refer to residential requirements in the California Energy Code, Title 24, Part 6, Subchapter 7, Section 150. Woodstoves, pellet stoves and fireplaces shall comply with applicable local ordinances.

5.503.1.1 Woodstoves. Woodstoves and pellet stoves shall comply with U.S. EPA New Source Performance Standards (NSPS) emission limits as applicable, and shall have a permanent label indicating they are certified to meet the emission limits.

SECTION 5.504 POLLUTANT CONTROL

Y ☒ N/A ☐ — **5.504.1 TEMPORARY VENTILATION.** The permanent HVAC system shall only be used during construction if necessary to condition the building or areas of addition or alteration within the required temperature range for material and equipment installation. If the HVAC system is used during construction, use return air filters with a Minimum Efficiency Reporting Value (MERV) of 8, based on ASHRAE 52.2-1999, or an average efficiency of 30% based on ASHRAE 52.1-1992 Replace all filters immediately prior to occupancy, or, if the building is occupied during alteration, at the conclusion of construction.

Y ☒ N/A ☐ — **5.504.3 Covering of duct openings and protection of mechanical equipment during construction.** At the time of rough installation and during storage on the construction site until final startup of the heating, cooling and ventilation equipment, all duct and other related air distribution component openings shall be covered with tape, plastic, sheetmetal or other methods acceptable to the enforcing agency to reduce the amount of dust, water and debris which may enter the system.

DISCLAIMER: *THIS DOCUMENT IS PROVIDED AND INTENDED TO BE USED AS A MEANS TO INDICATE AREAS OF COMPLIANCE WITH THE CALIFORNIA GREEN BUILDING STANDARDS (CALGREEN) CODE. DUE TO THE VARIABLES BETWEEN BUILDING DEPARTMENT JURISDICTIONS, THIS CHECKLIST IS TO BE USED ON AN INDIVIDUAL PROJECT BASIS AND MAY BE MODIFIED BY THE END USER TO MEET THOSE INDIVIDUAL NEEDS. THE END USER ASSUMES ALL RESPONSIBILITY ASSOCIATED WITH THE USE OF THIS DOCUMENT, INCLUDING VERIFICATION WITH THE FULL CODE.*

12/9/2020 8:47:32 PM

LDA
DESIGNERS & ARCHITECTS

Architect:
LDA Partners, Inc.
Designers & Architects
222 Central Court
Stockton, CA 95204
209.943.0405
www.ldapartners.com

LICENSED ARCHITECT
ERIC WILLIAM WOLLE
C28388
September 2021
STATE OF CALIFORNIA

Client:
LATHROP-MANTECA FIRE PROTECTION DISTRICT
19001 SOMERSTON PARKWAY
LATHROP, CA 95330
209.941.5102

Project:
FIRE STATION 31 UPGRADES

800 J STREET
LATHROP CA 95330

Project No.: 757-01-20
Drawn By: Author
Checked By: Checker

No.	Description	Date	By

3RD SUBMITTAL - BLDG. DEPT.

12/9/2020

CALGREEN CHECKLIST

G1.01

AIA California

2019 CALIFORNIA GREEN BUILDING STANDARDS CODE

NONRESIDENTIAL MANDATORY MEASURES, SHEET 1 (January 2020, Includes August 2019 Supplement)

Y = YES
N/A = NOT APPLICABLE
RESPON. PARTY = RESPONSIBLE PARTY (ie: ARCHITECT, ENGINEER, OWNER, CONTRACTOR, INSPECTOR ETC.)

Y | N/A | RESPON. PARTY

[Y ☒] [N/A ☐] **5.504.4 FINISH MATERIAL POLLUTANT CONTROL.** Finish materials shall comply with Sections 5.504.4.1 through 5.504.4.6.

5.504.4.1 Adhesives, sealants and caulks. Adhesives, sealants, and caulks used on the project shall meet the requirements of the following standards:

1. Adhesives, adhesive bonding primers, adhesive primers, sealants, sealant primers and caulks shall comply with local or regional air pollution control or air quality management district rules where applicable, or SCAQMD Rule 1168 VOC limits, as shown in Tables 5.504.4.1 and 5.504.4.2. Such products also shall comply with the Rule 1168 prohibition on the use of certain toxic compounds (chloroform, ethylene dichloride, methylene chloride, perchloroethylene and trichloroethylene), except for aerosol products as specified in subsection 2, below.

2. Aerosol adhesives, and smaller unit sizes of adhesives, and sealant or caulking compounds (in units of product, less packaging, which do not weigh more than one pound and do not consist of more than 16 fluid ounces) shall comply with statewide VOC standards and other requirements, including prohibitions on use of certain toxic compounds, of *California Code of Regulations*, Title 17, commencing with Section 94507.

TABLE 5.504.4.1 - ADHESIVE VOC LIMIT[1,2]

Less Water and Less Exempt Compounds in Grams per Liter

ARCHITECTURAL APPLICATIONS	CURRENT VOC LIMIT
INDOOR CARPET ADHESIVES	50
CARPET PAD ADHESIVES	50
OUTDOOR CARPET ADHESIVES	150
WOOD FLOORING ADHESIVES	100
RUBBER FLOOR ADHESIVES	60
SUBFLOOR ADHESIVES	50
CERAMIC TILE ADHESIVES	65
VCT & ASPHALT TILE ADHESIVES	50
DRYWALL & PANEL ADHESIVES	50
COVE BASE ADHESIVES	50
MULTIPURPOSE CONSTRUCTION ADHESIVES	70
STRUCTURAL GLAZING ADHESIVES	100
SINGLE-PLY ROOF MEMBRANE ADHESIVES	250
OTHER ADHESIVES NOT SPECIFICALLY LISTED	50
SPECIALTY APPLICATIONS	
PVC WELDING	510
CPVC WELDING	490
ABS WELDING	325
PLASTIC CEMENT WELDING	250
ADHESIVE PRIMER FOR PLASTIC	550
CONTACT ADHESIVE	80
SPECIAL PURPOSE CONTACT ADHESIVE	250
STRUCTURAL WOOD MEMBER ADHESIVE	140
TOP & TRIM ADHESIVE	250
SUBSTRATE SPECIFIC APPLICATIONS	
METAL TO METAL	30
PLASTIC FOAMS	50
POROUS MATERIAL (EXCEPT WOOD)	50
WOOD	30
FIBERGLASS	80

1. IF AN ADHESIVE IS USED TO BOND DISSIMILAR SUBSTRATES TOGETHER, THE ADHESIVE WITH THE HIGHEST VOC CONTENT SHALL BE ALLOWED.

2. FOR ADDITIONAL INFORMATION REGARDING METHODS TO MEASURE THE VOC CONTENT SPECIFIED IN THIS TABLE, SEE SOUTH COAST AIR QUALITY MANAGEMENT DISTRICT RULE 1168, www.arb.ca.gov/DRDB/SC/CURHTML/R1168.PDF

TABLE 5.504.4.2 - SEALANT VOC LIMIT

Less Water and Less Exempt Compounds in Grams per Liter

SEALANTS	CURRENT VOC LIMIT
ARCHITECTURAL	250
MARINE DECK	760
NONMEMBRANE ROOF	300
ROADWAY	250
SINGLE-PLY ROOF MEMBRANE	450
OTHER	420
SEALANT PRIMERS	
ARCHITECTURAL	
NONPOROUS	250
POROUS	775
MODIFIED BITUMINOUS	500
MARINE DECK	760
OTHER	750

NOTE: FOR ADDITIONAL INFORMATION REGARDING METHODS TO MEASURE THE VOC CONTENT SPECIFIED IN THESE TABLES, SEE SOUTH COAST AIR QUALITY MANAGEMENT DISTRICT RULE 1168.

5.504.4.3 Paints and coatings. Architectural paints and coatings shall comply with VOC limits in Table 1 of the ARB Architectural Coatings Suggested Control Measure, as shown in Table 5.504.4.3, unless more stringent local limits apply. The VOC content limit for coatings that do not meet the definitions for the specialty coatings categories listed in Table 5.504.4.3 shall be determined by classifying the coating as a Flat, Nonflat or Nonflat-High Gloss coating, based on its gloss, as defined in Subsections 4.21, 4.36 and 4.37 of the 2007 California Air Resources Board Suggested Control Measure, and the corresponding Flat, Nonflat or Nonflat-High Gloss VOC limit in Table 5.504.4.3 shall apply.

5.504.4.3.1 Aerosol Paints and coatings. Aerosol paints and coatings shall meet the PWMIR Limits for ROC in Section 94522(a)(3) and other requirements, including prohibitions on use of certain toxic compounds and ozone depleting substances, in Sections 94522(c)(2) and (d)(2) of *California Code of Regulations*, Title 17, commencing with Section 94520; and in areas under the jurisdiction of the Bay Area Air Quality Management District additionally comply with the percent VOC by weight of product limits of Regulation 8 Rule 49.

Y | N/A | RESPON. PARTY

TABLE 5.504.4.3 - VOC CONTENT LIMITS FOR ARCHITECTURAL COATINGS[2,3]

GRAMS OF VOC PER LITER OF COATING, LESS WATER & LESS EXEMPT COMPOUNDS

COATING CATEGORY	CURRENT VOC LIMIT
FLAT COATINGS	50
NONFLAT COATINGS	100
NONFLAT HIGH GLOSS COATINGS	150
SPECIALTY COATINGS	
ALUMINUM ROOF COATINGS	400
BASEMENT SPECIALTY COATINGS	400
BITUMINOUS ROOF COATINGS	50
BITUMINOUS ROOF PRIMERS	350
BOND BREAKERS	350
CONCRETE CURING COMPOUNDS	350
CONCRETE/MASONRY SEALERS	100
DRIVEWAY SEALERS	50
DRY FOG COATINGS	150
FAUX FINISHING COATINGS	350
FIRE RESISTIVE COATINGS	350
FLOOR COATINGS	100
FORM-RELEASE COMPOUNDS	250
GRAPHIC ARTS COATINGS (SIGN PAINTS)	500
HIGH-TEMPERATURE COATINGS	420
INDUSTRIAL MAINTENANCE COATINGS	250
LOW SOLIDS COATINGS[1]	120
MAGNESITE CEMENT COATINGS	450
MASTIC TEXTURE COATINGS	100
METALLIC PIGMENTED COATINGS	500
MULTICOLOR COATINGS	250
PRETREATMENT WASH PRIMERS	420
PRIMERS, SEALERS, & UNDERCOATERS	100
REACTIVE PENETRATING SEALERS	350
RECYCLED COATINGS	250
ROOF COATINGS	50
RUST PREVENTATIVE COATINGS	250
SHELLACS:	
CLEAR	730
OPAQUE	550
SPECIALTY PRIMERS, SEALERS & UNDERCOATERS	100
STAINS	250
STONE CONSOLIDANTS	450
SWIMMING POOL COATINGS	340
TRAFFIC MARKING COATINGS	100
TUB & TILE REFINISH COATINGS	420
WATERPROOFING MEMBRANES	250
WOOD COATINGS	275
WOOD PRESERVATIVES	350
ZINC-RICH PRIMERS	340

1. GRAMS OF VOC PER LITER OF COATING, INCLUDING WATER & EXEMPT COMPOUNDS

2. THE SPECIFIED LIMITS REMAIN IN EFFECT UNLESS REVISED LIMITS ARE LISTED IN SUBSEQUENT COLUMNS IN THE TABLE.

3. VALUES IN THIS TABLE ARE DERIVED FROM THOSE SPECIFIED BY THE CALIFORNIA AIR RESOURCES BOARD, ARCHITECTURAL COATINGS SUGGESTED CONTROL MEASURE, FEB. 1, 2008. MORE INFORMATION IS AVAILABLE FROM THE AIR RESOURCES BOARD.

5.504.4.3.2 Verification. Verification of compliance with this section shall be provided at the request of the enforcing agency. Documentation may include, but is not limited to, the following:
1. Manufacturer's product specification
2. Field verification of on-site product containers

5.504.4.4 Carpet Systems. All carpet installed in the building interior shall meet at least one of the testing and product requirements:

1. Carpet and Rug Institute's Green Label Plus Program.
2. Compliant with the VOC-emission limits and testing requirements specified in the California Department of Public Health Standard Method for the Testing and Evaluation of Volatile Organic Chemical Emissions from Indoor Sources Using Environmental Chambers, Version 1.1, February 2010 (also known as CDPH Standard Method V1.1 or Specification 01350).
3. NSF/ANSI 140 at the Gold level or higher;
4. Scientific Certifications Systems Sustainable Choice; or
5. Compliant with the Collaborative for High Performance Schools California (2014 CA-CHPS) Criteria listed in the CHPS High Performance Product Database.

5.504.4.4.1 Carpet cushion. All carpet cushion installed in the building interior shall meet the requirements of the Carpet and Rug Institute Green Label program.

5.504.4.4.2 Carpet adhesive. All carpet adhesive shall meet the requirements of Table 5.504.4.1.

5.504.4.5 Composite wood products. Hardwood plywood, particleboard and medium density fiberboard composite wood products used on the interior or exterior of the buildings shall meet the requirements for formaldehyde as specified in ARB's Air Toxics Control Measure (ATCM) for Composite Wood (17 CCR 93120 et seq.). Those materials not exempted under the ATCM must meet the specified emission limits, as shown in Table 5.504.4.5.

5.504.4.5.3 Documentation. Verification of compliance with this section shall be provided as requested by the enforcing agency. Documentation shall include at least one of the following:

1. Product certifications and specifications.
2. Chain of custody certifications.
3. Product labeled and invoiced as meeting the Composite Wood Products regulation (see CCR, Title 17, Section 93120, et seq.).
4. Exterior grade products marked as meeting the PS-1 or PS-2 standards of the Engineered Wood Association, the Australian AS/NZS 2269 or European 636 3S standards.
5. Other methods acceptable to the enforcing agency.

Y | N/A | RESPON. PARTY

TABLE 5.504.4.5 - FORMALDEHYDE LIMITS[1]

MAXIMUM FORMALDEHYDE EMISSIONS IN PARTS PER MILLION

PRODUCT	CURRENT LIMIT
HARDWOOD PLYWOOD VENEER CORE	0.05
HARDWOOD PLYWOOD COMPOSITE CORE	0.05
PARTICLE BOARD	0.09
MEDIUM DENSITY FIBERBOARD	0.11
THIN MEDIUM DENSITY FIBERBOARD[2]	0.13

1. VALUES IN THIS TABLE ARE DERIVED FROM THOSE SPECIFIED BY THE CALIFORNIA AIR RESOURCES BOARD, AIR TOXICS CONTROL MEASURE FOR COMPOSITE WOOD AS TESTED IN ACCORDANCE WITH ASTM E 1333. FOR ADDITIONAL INFORMATION, SEE CALIFORNIA CODE OF REGULATIONS, TITLE 17, SECTIONS 93120 THROUGH 93120.12.

2. THIN MEDIUM DENSITY FIBERBOARD HAS A MAXIMUM THICKNESS OF 5/16 INCHES (8 MM).

5.504.4.6 Resilient flooring systems. For 80 percent of floor area receiving resilient flooring, installed resilient flooring shall meet at least one of the following:

1. Certified under the Resilient Floor Covering Institute (RFCI) FloorScore program;
2. Compliant with the VOC-emission limits and testing requirements specified in the California Department of Public Health's 2010 Standard Method for the Testing and Evaluation Chambers, Version 1.1, February 2010;
3. Compliant with the Collaborative for High Performance Schools California (2014 CA-CHPS) Criteria and listed in the CHPS High Performance Product Database; or
4. Products certified under UL GREENGUARD Gold (formerly the Greenguard Children's & Schools Program).

5.504.4.6.1 Verification of compliance. Documentation shall be provided verifying that resilient flooring materials meet the pollutant emission limits.

5.504.5.3 Filters. In mechanically ventilated buildings, provide regularly occupied areas of the building with air filtration media for outside and return air that provides at least a Minimum Efficiency Reporting Value (MERV) of 13. MERV 13 filters shall be installed prior to occupancy, and recommendations for maintenance with filters of the same value shall be included in the operation and maintenance manual.

Exceptions: Existing mechanical equipment.

5.504.5.3.1 Labeling. Installed filters shall be clearly labeled by the manufacturer indicating the MERV rating.

[Y ☒] [N/A ☐] **5.504.7 ENVIRONMENTAL TOBACCO SMOKE (ETS) CONTROL.** Where outdoor areas are provided for smoking, prohibit smoking within 25 feet of building entries, outdoor air intakes and operable windows and within the building as already prohibited by other laws or regulations; or as enforced by ordinances, regulations or policies of any city, county, city and county, California Community College, campus of the California State University, or campus of the University of California, whichever are more stringent. When ordinances, regulations or policies are not in place, post signage to inform building occupants of the prohibitions.

SECTION 5.505 INDOOR MOISTURE CONTROL

[Y ☒] [N/A ☐] **5.505.1 INDOOR MOISTURE CONTROL.** Buildings shall meet or exceed the provisions of California Building Code, CCR, Title 24, Part 2, Sections 1202 (Ventilation) and Chapter 14 (Exterior Walls). For additional measures, see Section 5.407.2 of this code.

SECTION 5.506 INDOOR AIR QUALITY

[Y ☒] [N/A ☐] **5.506.1 OUTSIDE AIR DELIVERY.** For mechanically or naturally ventilated spaces in buildings, meet the minimum requirements of Section 120.1 (Requirements For Ventilation) of the *California Energy Code*, or the applicable local code, whichever is more stringent, and Division 1, Chapter 4 of CCR, Title 8.

[Y ☒] [N/A ☐] **5.506.2 CARBON DIOXIDE (CO_2) MONITORING.** For buildings or additions equipped with demand control ventilation, CO_2 sensors and ventilation controls shall be specified and installed in accordance with the requirements of the California Energy Code, Section 120(c)(4).

SECTION 5.507 ENVIRONMENTAL COMFORT

[Y ☒] [N/A ☐] **5.507.4 ACOUSTICAL CONTROL.** Employ building assemblies and components with Sound Transmission Class (STC) values determined in accordance with ASTM E 90 and ASTM E 413, or Outdoor-Indoor Sound Transmission Class (OITC) determined in accordance with ASTM E 1332, using either the prescriptive or performance method in Section 5.507.4.1 or 5.507.4.2.

Exception: Buildings with few or no occupants or where occupants are not likely to be affected by exterior noise, as determined by the enforcement authority, such as factories, stadiums, storage, enclosed parking structures and utility buildings.

Exception: [DSA-SS] For public schools and community colleges, the requirements of this section and all subsections apply only to new construction.

5.507.4.1 Exterior noise transmission, prescriptive method. Wall and roof-ceiling assemblies exposed to the noise source making up the building or addition envelope or altered envelope shall meet a composite STC rating of at least 50 or a composite OITC rating of no less than 40, with exterior windows of a minimum STC of 40 or OITC of 30 in the following locations:

1. Within the 65 CNEL noise contour of an airport.

Exceptions:

1. L_{dn} or CNEL for military airports shall be determined by the facility Air Installation Compatible Land Use Zone (AICUZ) plan.
2. L_{dn} or CNEL for other airports and heliports for which a land use plan has not been developed shall be determined by the local general plan noise element.

2. Within the 65 CNEL or L_{dn} noise contour of a freeway or expressway, railroad, industrial source or fixed-guideway source as determined by the Noise Element of the General Plan.

5.507.4.1.1. Noise exposure where noise contours are not readily available. Buildings exposed to a noise level of 65 dB L_{eq} - 1-hr during any hour of operation shall have building, addition or alteration exterior wall and roof-ceiling assemblies exposed to the noise source meeting a composite STC rating of at least 45 (or OITC 35), with exterior windows of a minimum STC of 40 (or OITC 30).

5.507.4.2 Performance Method. For buildings located as defined in Section 5.507.4.1 or 5.507.4.1.1, wall and roof-ceiling assemblies exposed to the noise source making up the building or addition envelope or altered envelope shall be constructed to provide an interior noise environment attributable to exterior sources that does not exceed an hourly equivalent noise level (Leq-1Hr) of 50 dBA in occupied areas during any hour of operation.

5.507.4.2.1 Site Features. Exterior features such as sound walls or earth berms may be utilized as appropriate to the building, addition or alteration project to mitigate sound migration to the interior.

5.507.4.2.2 Documentation of Compliance. An acoustical analysis documenting complying interior sound levels shall be prepared by personnel approved by the architect or engineer of record.

5.507.4.3 Interior sound transmission. Wall and floor-ceiling assemblies separating tenant spaces and tenant spaces and public places shall have an STC of at least 40.

Note: Examples of assemblies and their various STC ratings may be found at the California Office of Noise Control: www.toolbase.org/PDF/CaseStudies/stc_icc_ratings.pdf.

SECTION 5.508 OUTDOOR AIR QUALITY

[Y ☒] [N/A ☐] **5.508.1 Ozone depletion and greenhouse gas reductions.** Installations of HVAC, refrigeration and fire suppression equipment shall comply with Sections 5.508.1.1 and 5.508.1.2.

5.508.1.1 Chlorofluorocarbons (CFCs). Install HVAC, refrigeration and fire suppression equipment that do not contain CFCs.

5.508.1.2 Halons. Install HVAC, refrigeration and fire suppression equipment that do not contain Halons.

[Y ☐] [N/A ☒] **5.508.2 Supermarket refrigerant leak reduction.** New commercial refrigeration systems shall comply with the provisions of this section when installed in retail food stores 8,000 square feet or more conditioned area, and that utilize either refrigerated display cases, or walk-in coolers or freezers connected to remote compressor units or condensing units. The leak reduction measures apply to refrigeration systems containing high-global-warming potential (high-GWP) refrigerants with a GWP of 150 or greater. New refrigeration systems include both new facilities and the replacement of existing refrigeration systems in existing facilities.

Exception: Refrigeration systems containing low-global warming potential (low-GWP) refrigerant with a GWP value less than 150 are not subject to this section. Low-GWP refrigerants are nonozone-depleting refrigerants that include ammonia, carbon dioxide (CO_2), and potentially other refrigerants.

Y | N/A | RESPON. PARTY

5.508.2.1 Refrigerant piping. Piping compliant with the California Mechanical Code shall be installed to be accessible for leak protection and repairs. Piping runs using threaded pipe, copper tubing with an outside diameter (OD) less than 1/4 inch, flared tubing connections and short radius elbows shall not be used in refrigerant systems except as noted below.

5.508.2.1.1 Threaded pipe. Threaded connections are permitted at the compressor rack.

5.508.2.1.2 Copper pipe. Copper tubing with an OD less than 1/4 inch may be used in systems with a refrigerant charge of 5 pounds or less.

5.508.2.1.2.1 Anchorage. One-fouth-inch OD tubing shall be securely clamped to a rigid base to keep vibration levels below 8 mils.

5.508.2.1.3 Flared tubing connections. Double-flared tubing connections may be used for pressure controls, valve pilot lines and oil.

Exception: Single-flared tubing connections may be used with a multiring seal coated with industrial sealant suitable for use with refrigerants and tightened in accordance with manufacturer's recommendations.

5.508.2.1.4 Elbows. Short radius elbows are only permitted where space limitations prohibit use of long radius elbows.

5.508.2.2 Valves. Valves Valves and fittings shall comply with the *California Mechanical Code* and as follows.

5.508.2.2.1 Pressure relief valves. For vessels containing high-GWP refrigerant, a rupture disc shall be installed between the outlet of the vessel and the inlet of the pressure relief valve.

5.508.2.2.1.1 Pressure detection. A pressure gauge, pressure transducer or other device shall be installed in the space between the rupture disc and the relief valve inlet to indicate a disc rupture or discharge of the relief valve.

5.508.2.2.2 Access valves. Only Schrader access valves with a brass or steel body are permitted for use.

5.508.2.2.2.1 Valve caps. For systems with a refrigerant charge of 5 pounds or more, valve caps shall be brass or steel and not plastic.

5.508.2.2.2.2 Seal caps. If designed for it, the cap shall have a neoprene O-ring in place.

5.508.2.2.2.2.1 Chain tethers. Chain tethers to fit ovr the stem are required for valves designed to have seal caps.

Exception: Valves with seal caps that are not removed from the valve during stem operation.

5.508.2.3 Refrigerated service cases. Refrigerated service cases holding food products containing vinegar and salt shall have evaporator coils of corrosion-resistant material, such as stainless steel; or be coated to prevent corrosion from these substances.

5.508.2.3.1 Coil coating. Consideration shall be given to the heat transfer efficiency of coil coating to maximize energy efficiency.

5.508.2.4 Refrigerant receivers. Refrigerant receivers with capacities greater than 200 pounds shall be fitted with a device tha indicates the level of refrigerant in the receiver.

5.508.2.5 Pressure testing. The system shall be pressure tested during installation prior to evacuation and charging.

5.508.2.5.1 Minimum pressure. The system shall be charged with regulated dry nitrogen and appropriate tracer gas to bring system pressure up to 300 psig minimum.

5.508.2.5.2 Leaks. Check the system for leaks, repair any leaks, and retest for pressure using the same gauge.

5.508.2.5.3 Allowable pressure change. The system shall stand, unaltered, for 24 hours with no more than a +/- one pound pressure change from 300 psig, measured with the same gauge.

5.508.2.6 Evacuation. The system shall be evacuated after pressure testing and prior to charging.

5.508.2.6.1 First vacuum. Pull a system vacuum down to at least 1000 microns (+/- 50 microns), and hold for 30 minutes.

5.508.2.6.2 Second vacuum. Pull a second system vacuum to a minimum of 500 microns and hold for 30 minutes.

5.508.2.6.3 Third vacuum. Pull a third vacuum down to a minimum of 300 microns, and hold for 24 hours with a maximum drift of 100 microns over a 24-hour period.

CHAPTER 7
INSTALLER & SPECIAL INSPECTOR QUALIFICATIONS

702 QUALIFICATIONS

702.1 INSTALLER TRAINING. HVAC system installers shall be trained and certified in the proper installation of HVAC systems including ducts and equipment by a nationally or regionally recognized training or certification program. Uncertified persons may perform HVAC installations when under the direct supervision and responsibility of a person trained and certified to install HVAC systems or contractor licensed to install HVAC systems. Examples of acceptable HVAC training and certification programs include but are not limited to the following:

1. State certified apprenticeship programs.
2. Public utility training programs.
3. Training programs sponsored by trade, labor or statewide energy consulting or verification organizations.
4. Programs sponsored by manufacturing organizations.
5. Other programs acceptable to the enforcing agency.

702.2 SPECIAL INSPECTION [HCD]. When required by the enforcing agency, the owner or the responsible entity acting as the owner's agent shall employ one or more special inspectors to provide inspection or other duties necessary to substantiate compliance with this code. Special inspectors shall demonstrate competence to the satisfaction of the enforcing agency for the particular type of inspection or task to be performed. In addition to other certifications or qualifications acceptable to the enforcing agency, the following certifications or education may be considered by the enforcing agency when evaluating the qualifications of a special inspector:

1. Certification by a national or regional green building program or standard publisher.
2. Certification by a statewide energy consulting or verification organization, such as HERS raters, building performance contractors, and home energy auditors.
3. Successful completion of a third party apprentice training program in the appropriate trade.
4. Other programs acceptable to the enforcing agency.

Notes:

1. Special inspectors shall be independent entities with no financial interest in the materials or the project they are inspecting for compliance with this code.
2. HERS raters are special inspectors certified by the California Energy Commission (CEC) to rate homes in California according to the Home Energy Rating System (HERS).

[BSC-CG] When required by the enforcing agency, the owner or the responsible entity acting as the owner's agent shall employ one or more special inspectors to provide inspection or other duties necessary to substantiate compliance with this code. Special inspectors shall demonstrate competence to the satisfaction of the enforcing agency for the particular type of inspection or task to be performed. In addition, the special inspector shall have a certification from a recognized state, national or international association, as determined by the local agency. The area of certification shall be closely related to the primary job function, as determined by the local agency.

Note: Special inspectors shall be independent entities with no financial interest in the materials or the project they are inspecting for compliance with this code.

703 VERIFICATIONS

703.1 DOCUMENTATION. Documentation used to show compliance with this code shall include but is not limited to, construction documents, plans, specifications, builder or installer certification, inspection reports, or other methods acceptable to the enforcing agency which demonstrate substantial conformance. When specific documentation or special inspection is necessary to verify compliance, that method of compliance will be specified in the appropriate section or identified applicable checklist.

DISCLAIMER: *THIS DOCUMENT IS PROVIDED AND INTENDED TO BE USED AS A MEANS TO INDICATE AREAS OF COMPLIANCE WITH THE CALIFORNIA GREEN BUILDING STANDARDS (CALGREEN) CODE. DUE TO THE VARIABLES BETWEEN BUILDING DEPARTMENT JURISDICTIONS, THIS CHECKLIST IS TO BE USED ON AN INDIVIDUAL PROJECT BASIS AND MAY BE MODIFIED BY THE END USER TO MEET THOSE INDIVIDUAL NEEDS. THE END USER ASSUMES ALL RESPONSIBILITY ASSOCIATED WITH THE USE OF THIS DOCUMENT, INCLUDING VERIFICATION WITH THE FULL CODE.*

12/9/2020 8:47:35 PM

LDA
DESIGNERS & ARCHITECTS

Architect:
LDA Partners, Inc.
Designers & Architects
222 Central Court
Stockton, CA 95204
209.943.0405
www.ldapartners.com

LICENSED ARCHITECT
ERIC WILLIAM WOHLE
C28388
September 2021
STATE OF CALIFORNIA

Client:
LATHROP-MANTECA FIRE PROTECTION DISTRICT
19001 SOMERSTON PARKWAY
LATHROP, CA 95330
209.941.5102

Project:
FIRE STATION 31 UPGRADES

800 J STREET
LATHROP CA 95330

Project No.: 757-01-20
Drawn By: Author
Checked By: Checker

No.	Description	Date	By

3RD SUBMITTAL - BLDG. DEPT.

12/9/2020

CALGREEN CHECKLIST

G1.02

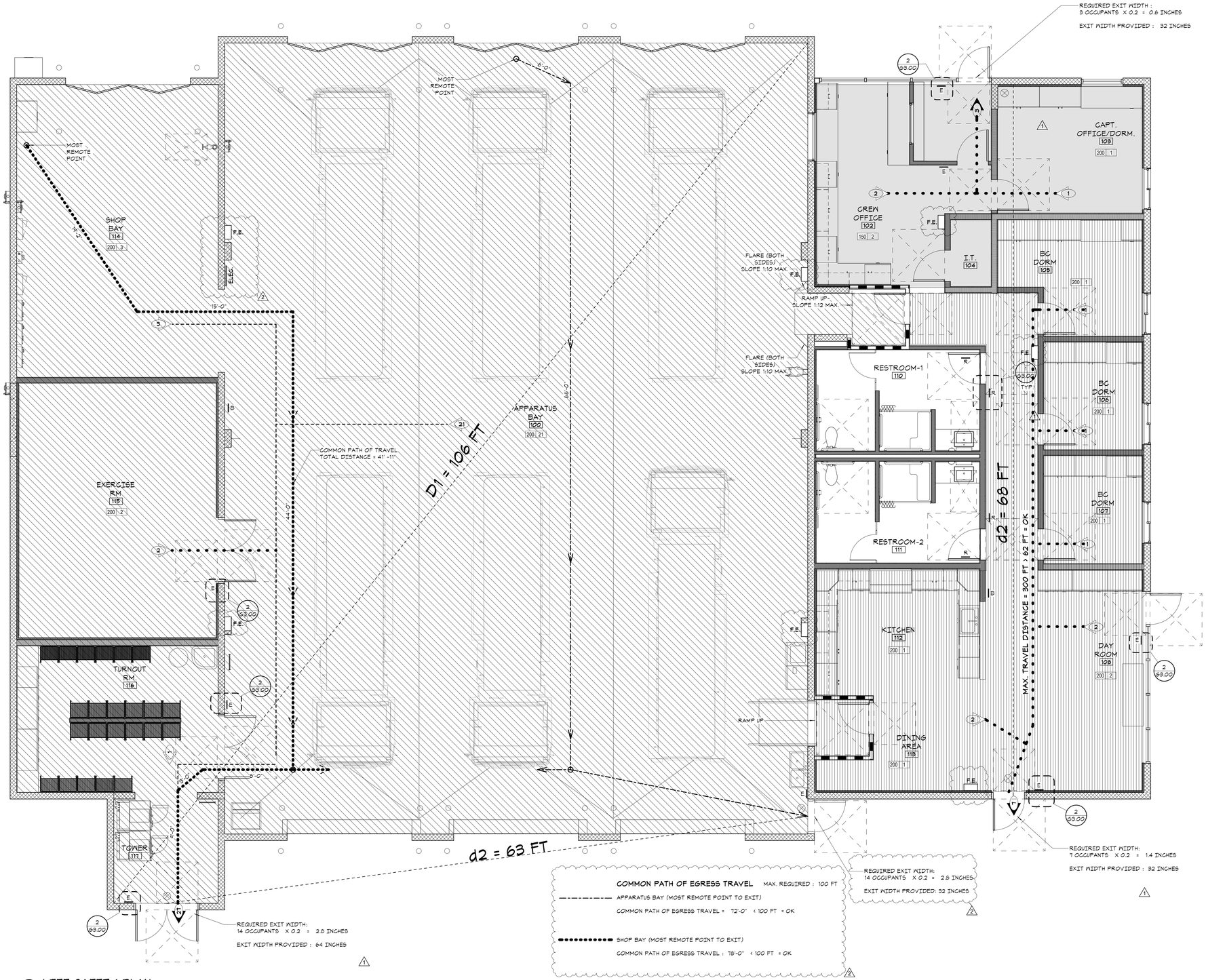

1 G2.00 LIFE SAFETY PLAN
1/4" = 1'-0"

PLUMBING FIXTURE ANALYSIS

OCCUPANCY USE	OCCUPANT LOAD FACTOR	AREA(SF)	CALCULATION	OCCUPANT LOAD	NO. OF MALE/FEMALE
S1	5,000	5,187	5,187/5,000	1.037 = 2	2/2 = 1 M/ 1F
APPARATUS BAY SHOP TURN OUT ROOM		4,298 622 266			
B	200	968	968/200	4.84= 5	5/2 = 3 M/ 3F
OFFICE EXERCISE ROOM		568 400			
R2	200	1,357	1,357/200	6.785 = 7	7/2 = 4 M/ 4F
BC DORMS DAY ROOM KITCHEN & DINING		600 414 343			

APPARATUS BAY/SHOP

- WATER CLOSET: MALE/FEMALE	1 : 1 - 100	1/100 =	0.01
- LAVATORY: MALE	1 : 1 - 200	1/200 =	0.005

OFFICE

- WATER CLOSET: MALE	1 : 1 - 50	3/50 =	0.06
- WATER CLOSET: FEMALE	1 : 1 - 15	3/15 =	0.2
- LAVATORY: MALE	1 : 1 - 75	3/75 =	0.04
- LAVATORY: FEMALE	1 : 1 - 50	3/50 =	0.06

DORM : (R-2)

- WATER CLOSET: MALE/FEMALE	1 : 1 - 15	4/15 =	0.27
- LAVATORY: MALE/FEMALE	1 : 1 - 40	4/40 =	0.1

* ALL GENDER RESTROOM

SUM OF ALL REQUIRED FIXTURES:

RESTROOM-1
WATER CLOSET (MALE/FEMALE) = 0.01 + 0.06 + 0.27 = 0.34 = 1 WC
LAVATORY (MALE/FEMALE) = 0.005 + 0.06 + 0.1 = 0.165 = 1 LAV

RESTROOM-2
WATER CLOSET (MALE/FEMALE) = 0.01 + 0.2 + 0.27 = 0.48 = 1 WC
LAVATORY (MALE/FEMALE) = 0.005 + 0.04 + 0.1 = 0.145 = 1 LAV

*ALL GENDER RESTROOM

LEGEND

- ROOM NAME / 101 — ROOM NAME & REFERENCE NUMBER
- XXX — FLOOR AREA
- 0 | 0 — ROOM OCCUPANT LOAD (SF/OLF); OCCUPANT LOAD FACTOR FROM TABLE 1004.1.2
- 5 — OCCUPANT LOAD FROM ROOM OR SPACE INDICATING DIRECTION OF TRAVEL
- 26 — CUMULATIVE OCCUPANT LOAD @ EXIT INDICATING DIRECTION OF TRAVEL
- 95' - 0" / 51' - 0" — COMMON PATH OF EGRESS TRAVEL DISTANCE; EXIT ACCESS TRAVEL DISTANCE
- EGRESS PATH OF TRAVEL
- F.E. — FIRE EXTINGUISHER CABINET (30 AD.03 / 25 AD.03)
- E — "EXIT" SIGN - SEE (10 G3.00)
- B — "EXIT ROUTE" SIGN - SEE (10 G3.00)
- D.E. — "DIRECTIONAL EXIT ROUTE" SIGN - SEE (10 G3.00)
- ELEC. — "ELECTRICAL ROOM" SIGN- SEE (15 G3.00)
- BATTERY BACK-UP ILLUMINATED EXIT SIGN @ 8'-6" A.F.F. - REFER TO ELECT. DWGS.

CODE COMPLIANCE

REFERENCE	DESCRIPTION	INTERPRETATION
MAXIMUM TRAVEL DISTANCE		
CBC TABLE 1017.2	MAX. TRAVEL DISTANCE	250 FT (W/ SPRINKLERS)
CBC 1006.2.1	COMMON PATH OF TRAVEL	125 FT
MINIMUM REQUIRED EGRESS		
CBC 1006.3.2	MINIMUM NUMBER OF EXITS REQUIRED	2 (OCC. LOAD 1-500)
CBC 1007.1.1	EXIT ARRANGEMENT SEPARATION	< 1/3 THE DIAGONAL DIM. (W/ SPRINKLERS)

OCCUPANT LOAD

ROOM NO.	ROOM NAME	AREA	LOAD FACTOR	OCC. LOAD
100	APPARATUS BAY	4334 SF	200 SF	22
101	LOBBY	55 SF	150 SF	0
102	CREW OFFICE	233 SF	150 SF	2
103	CAPT. OFFICE/DORM.	171 SF	150 SF	1
104	I.T.	25 SF	150 SF	0
105	BC DORM	195 SF	200 SF	1
106	BC DORM	98 SF	200 SF	0
107	BC DORM	98 SF	200 SF	0
108	DAY ROOM	323 SF	200 SF	2
109	HALLWAY	173 SF	0 SF	
110	RESTROOM-1	144 SF		
111	RESTROOM-2	150 SF		
112	KITCHEN	194 SF	200 SF	1
113	DINING AREA	113 SF	200 SF	1
114	SHOP BAY	550 SF	200 SF	3
115	EXERCISE RM	466 SF	200 SF	2
116	TURNOUT RM.	269 SF	200 SF	1
117	TOWER	104 SF	300 SF	0

OCCUPANT LOAD :

51 -OCCUPANCY:

A. APPARATUS BAYS = 21 OCCUPANTS
B. SHOP = 9
C. EXERCISE RM. = 2
D. TURNOUT RM = 1

SUB-TOTAL = 21 OCCUPANTS

B - OCCUPANCY:

A. OFFICE = 3 OCCUPANTS

R-3 - OCCUPANCY:

A. BC DORMS = 3 OCCUPANTS
B. DAY ROOM = 2
C. KITCHEN & DINING = 2

SUB-TOTAL = 7 OCCUPANTS

TOTAL = 31 OCCUPANTS

NO. OF EXITS :

NO. OF EXITS REQUIRED : 3 (S-1 =1, B = 1; R-3 = 1)
NO. OF EXITS PROVIDED : 3

EXIT WIDTH:

S-1 :
REQUIRED EXIT WIDTH :
21 OCCUPANTS X 0.2 = 5.4 INCHES
EXIT WIDTH PROVIDED : 64 INCHES

B :
REQUIRED EXIT WIDTH :
9 OCCUPANTS X 0.2 = 0.6 INCHES
EXIT WIDTH PROVIDED : 32 INCHES

R-3
REQUIRED EXIT WIDTH:
7 OCCUPANTS X 0.2 = 1.4 INCHES

EXIT WIDTH PROVIDED : 32 INCHES

DISTANCE BETWEEN EXITS

D1 = 106 FT
d2 = 63 FT (MUST BE GREATER THAN 1/3 OF D1)

106 (1/3) = 35.33 FT < 63 FT = OK

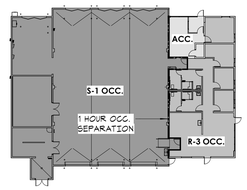

2 G2.00 AREA ANALYSIS PLAN
1" = 30'-0"

LDA DESIGNERS & ARCHITECTS

Architect:
LDA Partners, Inc.
Designers & Architects
222 Central Court
Stockton, CA 95204
209.943.0405
www.ldapartners.com

LICENSED ARCHITECT — JOHN C. WILLIAM ROSS — C28388 — September 2021 — STATE OF CALIFORNIA

Client:
LATHROP-MANTECA FIRE PROTECTION DISTRICT
19001 SOMERSTON PARKWAY
LATHROP, CA 95330
209.941.5102

Project:
FIRE STATION 31 UPGRADES

800 J STREET
LATHROP CA 95330

Project No.: 757-01-20
Drawn By: Author
Checked By: Checker

No.	Description	Date	By
1	PLAN CHECK #1 1ST REVIEW CYCLE	10-21-2020	
2	PLAN CHECK #2/ADDENDA #1	12-9-2020	

3RD SUBMITTAL - BLDG. DEPT.

12/9/2020

LIFE SAFETY PLAN

G2.00

D:\2020\757-01 FIRE STATION 31 UPGRADES\DRAWINGS\ARCHITECTURAL\G2.00 LIFE SAFETY PLAN.DWG 12/9/2020 3:47:37 PM

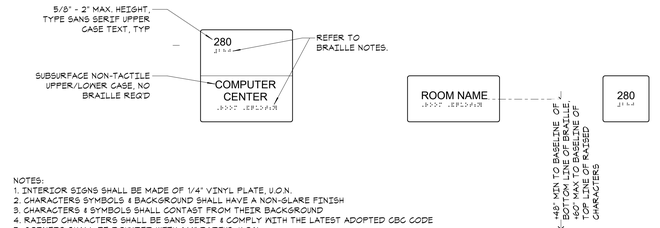

NOTES:
1. INTERIOR SIGNS SHALL BE MADE OF 1/4" VINYL PLATE, U.O.N.
2. CHARACTERS SYMBOLS & BACKGROUND SHALL HAVE A NON-GLARE FINISH
3. CHARACTERS & SYMBOLS SHALL CONTAST FROM THEIR BACKGROUND
4. RAISED CHARACTERS SHALL BE SANS SERIF & COMPLY WITH THE LATEST ADOPTED CBC CODE
5. CORNERS SHALL BE ROUNDED WITH 1/4" RADIUS, U.O.N.
6. BRAILLE SYMBOLS SHALL BE CONTRACTED GRADE 2 PER CBC 11B-703.3, DOMED OR ROUNDED AND DIMENSIONED PER TABLE CBC 11B-703.3.1. TYP.
7. CLIENT TO SELECT SIGNAGE TYPE, U.O.N.

9 / G3.00 ROOM I.D. SIGNAGE - WALL MOUNT
1 1/2" = 1'-0"

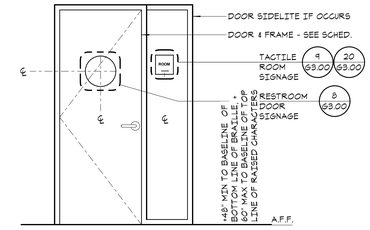

NOTE:
1. A PERSON MAY APPROACH WITHIN 3" OF SIGNAGE WITHOUT ENCOUNTERING PROTUDING OBJECTS OR STANDING WITHIN THE SWING OF A DOOR.
2. SIGNS SHALL BE LOCATED ON THE WALL ADJACENT TO THE LATCH SIDE OF THE DOOR.
3. SIGNAGE INSTALLATION SHALL BE IN COMPLIANCE WITH 2016 CBC 11B-703.4.2

1 / G3.00 SIGNAGE MOUNTING HEIGHT
1/2" = 1'-0"

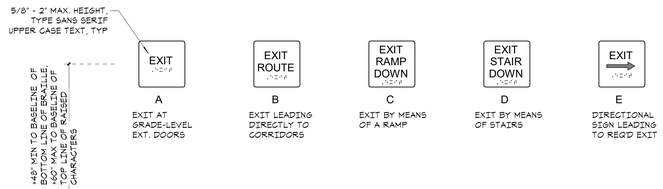

NOTES:
1. INTERIOR SIGNS SHALL BE MADE OF 1/4" VINYL PLATE, U.O.N.
2. CHARACTERS SYMBOLS & BACKGROUND SHALL HAVE A NON-GLARE FINISH
3. CHARACTERS & SYMBOLS SHALL CONTAST FROM THEIR BACKGROUND
4. RAISED CHARACTERS SHALL BE SANS SERIF & COMPLY WITH THE LATEST ADOPTED CBC CODE
5. CORNERS SHALL BE ROUNDED WITH 1/4" RADIUS, U.O.N.
6. BRAILLE SYMBOLS SHALL BE CONTRACTED GRADE 2 PER CBC 11B-703.3, DOMED OR ROUNDED AND DIMENSIONED PER TABLE CBC 11B-703.3.1. TYP.

10 / G3.00 EXIT SIGNAGE
1 1/2" = 1'-0"

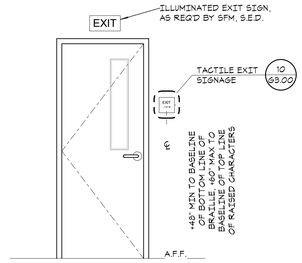

2 / G3.00 EXIT DOOR SIGNAGE
1/2" = 1'-0"

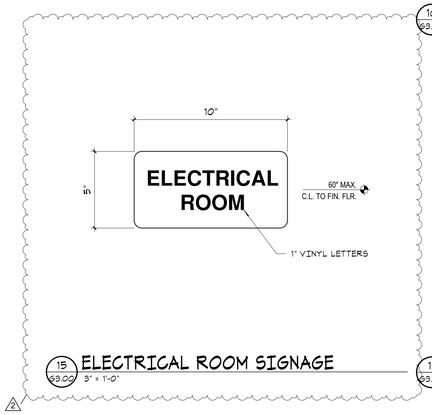

15 / G3.00 ELECTRICAL ROOM SIGNAGE
3" = 1'-0"

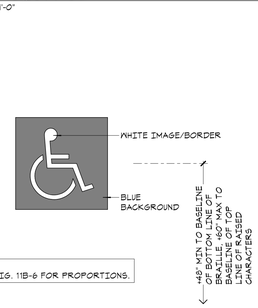

NOTE:
SEE CBC FIG. 11B-6 FOR PROPORTIONS.

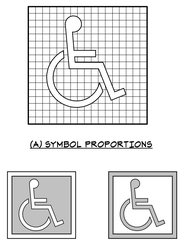

(A) SYMBOL PROPORTIONS

(B) DISPLAY CONDITIONS

11 / G3.00 INT'L. SYMBOL OF ACCESSIBILITY
3" = 1'-0"

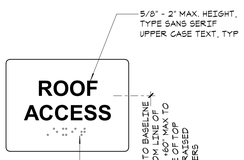

NOTES:
1. INTERIOR SIGNS SHALL BE MADE OF 1/4" VINYL PLATE, U.O.N.
2. CHARACTERS SYMBOLS & BACKGROUND SHALL HAVE A NON-GLARE FINISH
3. CHARACTERS & SYMBOLS SHALL CONTAST FROM THEIR BACKGROUND
4. RAISED CHARACTERS SHALL BE SANS SERIF & COMPLY WITH THE LATEST ADOPTED CBC CODE
5. CORNERS SHALL BE ROUNDED WITH 1/4" RADIUS, U.O.N.
6. BRAILLE SYMBOLS SHALL BE CONTRACTED GRADE 2 PER CBC 11B-703.3, DOMED OR ROUNDED AND DIMENSIONED PER TABLE CBC 11B-703.3.1. TYP.
7. CLIENT TO SELECT SIGNAGE TYPE, U.O.N.

3 / G3.00 ROOF ACCESS SIGN
3" = 1'-0"

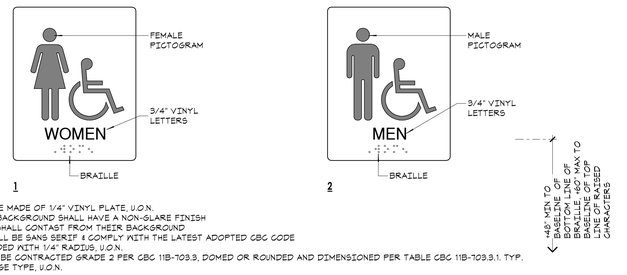

NOTES:
1. INTERIOR SIGNS SHALL BE MADE OF 1/4" VINYL PLATE, U.O.N.
2. CHARACTERS SYMBOLS & BACKGROUND SHALL HAVE A NON-GLARE FINISH
3. CHARACTERS & SYMBOLS SHALL CONTAST FROM THEIR BACKGROUND
4. RAISED CHARACTERS SHALL BE SANS SERIF & COMPLY WITH THE LATEST ADOPTED CBC CODE
5. CORNERS SHALL BE ROUNDED WITH 1/4" RADIUS, U.O.N.
6. BRAILLE SYMBOLS SHALL BE CONTRACTED GRADE 2 PER CBC 11B-703.3, DOMED OR RUNDED AND DIMENSIONED PER TABLE CBC 11B-703.3.1. TYP.
7. CLIENT TO SELECT SIGNAGE TYPE, U.O.N.

20 / G3.00 RESTROOM WALL I.D.
3" = 1'-0"

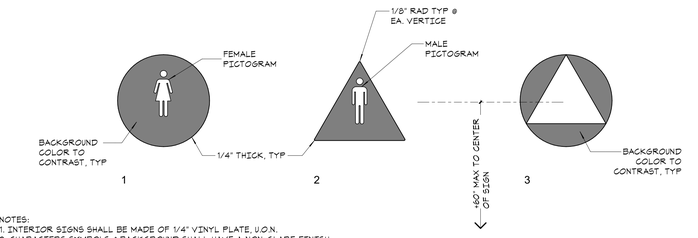

NOTES:
1. INTERIOR SIGNS SHALL BE MADE OF 1/4" VINYL PLATE, U.O.N.
2. CHARACTERS SYMBOLS & BACKGROUND SHALL HAVE A NON-GLARE FINISH
3. CHARACTERS & SYMBOLS SHALL CONTAST FROM THEIR BACKGROUND
4. RAISED CHARACTERS SHALL BE SANS SERIF & COMPLY WITH THE LATEST ADOPTED CBC CODE
5. CORNERS SHALL BE ROUNDED WITH 1/4" RADIUS, U.O.N.
6. BRAILLE SYMBOLS SHALL BE CONTRACTED GRADE 2 PER CBC 11B-703.3, DOMED OR ROUNDED AND DIMENSIONED PER TABLE CBC 11B-703.3.1. TYP.

8 / G3.00 RESTROOM DOOR I.D.
1 1/2" = 1'-0"

LDA DESIGNERS & ARCHITECTS

Architect:
LDA Partners, Inc.
Designers & Architects
222 Central Court
Stockton, CA 95204
209.943.0405
www.ldapartners.com

LICENSED ARCHITECT
JEFFREY WILLIAM WHITE
C28388
September 2021
STATE OF CALIFORNIA

Client:
LATHROP-MANTECA FIRE PROTECTION DISTRICT
19001 SOMERSTON PARKWAY
LATHROP, CA 95330
209.941.5102

Project:
FIRE STATION 31 UPGRADES

800 J STREET
LATHROP CA 95330

Project No.: 757-01-20
Drawn By: Author
Checked By: Checker

No.	Description	Date	By
2	PLAN CHECK #2/ADDENDA #1	12-9-2020	

3RD SUBMITTAL - BLDG. DEPT.

12/9/2020

SIGNAGE DETAILS

G3.00

2020/757-01 G-3.00.dwg

DOORS & HARDWARE

1. ALL ENTRANCES AND EXTERIOR GROUND-FLOOR EXIT DOORS TO BUILDINGS AND FACILITIES SHALL BE MADE ACCESSIBLE TO PERSONS WITH DISABILITIES. DOORWAYS SHALL HAVE A MINIMUM CLEAR OPENING OF 32 INCHES WITH THE DOOR OPEN 90 DEGREES, MEASURED BETWEEN THE FACE OF THE DOOR AND THE OPPOSITE STOP (SECTIONS 1010.1.1, 11B-404.2 AND 11B-404.2.3).
2. HAND ACTIVATED DOOR OPENING HARDWARE SHALL BE CENTERED BETWEEN 34 INCHES AND 44 INCHES ABOVE THE FLOOR. LATCHING AND LOCKING DOORS THAT ARE HAND ACTIVATED AND WHICH ARE IN A PATH OF TRAVEL SHALL BE OPERABLE WITH A SINGLE EFFORT BY LEVER-TYPE HARDWARE, PANIC BARS, PUSH-PULL ACTIVATING BARS, OR OTHER HARDWARE DESIGNED TO PROVIDE PASSAGE WITHOUT REQUIRING THE ABILITY OT GRASP THE OPENING HARDWARE. LOCKED EXIT DOORS SHALL OPERATE AS ABOVE IN EGRESS DIRECTION (SECTIONS 1010.1.9 AND 11B-404.2.7).
3. PANIC HARDWARE: WHERE INSTALLED, SHALL COMPLY WITH THE REQUIREMENTS OF CBC 1010.1.10.1. THE ACTIVATING MEMBER SHALL BE MOUNTED AT A HEIGHT OF NOT LESS THAN 34 INCHES OR MORE THAN 44 INCHES ABOVE THE FLOOR. THE UNLATCHING FORCE SHALL NOT EXCEED 15 POUNDS WHEN APPLIED IN THE DIRECTION OF TRAVEL. (SECTION 1010.1.10, 1010.1.10.1 AND 11B-404.2.9). IF PANIC DEVICE OCCURS AT A DOOR WITH VISION PANEL, HARDWARE SHALL BE INSTALLED NO HIGHER THAN 39" A.F.F. U.O.N.
4. WIDTH AND HEIGHT: EVERY REQUIRED EXIT DOORWAY SHALL BE OF A SIZE AS TO PERMIT THE INSTALLATION OF A DOOR NOT LESS THAN 3 FEET IN WIDTH AND NOT LESS THAN 6 FEET, 8 INCHES IN HEIGHT WHEN INSTALLED IN EXIT DOORWAYS. EXIT DOORS SHALL BE CAPABLE OF OPENING AT LEAST 90 DEGREES AND SHALL BE SO MOUNTED THAT THE CLEAR WIDTH OF THE EXIT WAY IS NOT LESS THAN 32 INCHES (SECTIONS 1010.1.1 AND 11B-404.2.).
5. HINGED DOORS: THE OPENING WIDTH SHALL BE MEASURED WITH THE DOOR POSITIONED AT AN ANGLE OF 90 DEGREES FROM ITS CLOSED POSITION. WHERE A PAIR OF DOORS IS UTILIZED, AT LEAST ONE OF THE DOORS SHALL MEET THIS OPENING REQUEMENT. REVOLVING DOORS SHALL NOT BE USED AS A REQUIRED ENTRANCE FOR PERSONS WITH DISABILITIES (SECTIONS 11B-404.2.1, 11B-404.2.2 AND 11B-404.2.3).
6. THE MAXIMUM WIDTH OF A SWINGING DOOR LEAF SHALL NOT EXCEED 48 INCHES (SECTION 1010.1.1).
7. MAXIMUM EFFORT TO OPERATE DOORS SHALL NOT EXCEED 5 POUNDS FOR EXTERIOR DOORS AND 5 POUNDS FOR INTERIOR DOORS, SUCH PULL OR PUSH EFFORT BEING APPLIED AT RIGHT ANGLES TO HINGED DOORS AND AT THE CENTER PLANE OF SLIDING OR FOLDING DOORS. COMPENSATING DEVICES OR AUTOMATIC DOOR OPERATORS MAY BE UTILIZED TO MEET THE ABOVE STANDARDS. WHEN FIRE DOORS ARE REQUIRED, THE MAXIMUM EFFORT TO OPERATE THE DOOR MAY BE INCREASED NOT TO EXCEED 15 POUNDS (SECTIONS 1010.1.3, 1010.1.3.1 AND 11B-404.2.9).
8. DOOR AND GATE SURFACES: SWINGING DOOR AND GATE SURFACES WITHIN 10 INCHES OF THE FINISH FLOOR OR GROUND MEASURED VERTICALLY SHALL HAVE A SMOOTH SURFACES ON THE PUSH SIDE EXTENDING THE FULL WIDTH OF THE DOOR OR GATE. PARTS CREATING HORIZONTAL OR VERTICAL JOINTS IN THESE SURFACES SHALL BE WITHIN 1/16" INCH OF THE SAME PLANE AS THE OTHER AND BE FREE OF SHARP OR ABRASIVE EDGES. CAVITIES CREATED BY ADDED KICK PLATES SHALL BE CAPPED (SECTIONS 11B-404.2.10).
9. THRESHOLDS SHALL NOT EXCEED 1/2 INCHES IN HEIGHT, WITH A MAXIMUM 1/4-INCH VERTICAL AND CHANGES IN LEVEL BETWEEN 1/4 INCH AND 1/2 INCH SHALL BE BEVELED WITH A SLOPE NO GREATER THAN 1:2 (50% SLOPE) (SECTION 11B-404.2.5).
10. EXIT DOORS FROM GROUP 'A' OCCUPANCY SHALL NOT BE PROVIDED WITH A LATCH OR LOCK UNLESS IT IS PANIC HARDWARE (SECTION 1010.1.10).
11. RECESSED DOORMATS SHALL BE ADEQUATELY ANCHORED TO PREVENT INTERFERENCE WITH WHEELCHAIR TRAFFIC (SECTION 11B-302.1 AND 11B-302.2).
12. ALL GATES, INCLUDING TICKET GATES, SHALL MEET ALL APPLICABLE SPECIFICATIONS FOR DOORS (SECTION 11B-404.1 AND 11B-404.2).
13. DOOR CLOSING SPEED: DOOR AND GATE CLOSING SPEED SHALL COMPLY WITH SECTION 11B-404.2.8. DOOR CLOSERS AND GATE CLOSERS SHALL BE ADJUSTED SO THAT FROM AN OPEN POSITION OF 90 DEGRESS, THE TIME REQUIRED TO MOVE THE DOOR TO A POSITION OF 12 DEGREES FROM THE LATCH IS 5 SECONDS MINIMUM. DOOR AND GATE SPRING HINGES SHALL BE ADJUSTED SO THAT FROM THE OPEN POSITION OF 70 DEGREES, THE DOOR OR GATE SHALL MOVE TO THE CLOSED POSITION IN 1.5 SECONDS MINIMUM. (SECTIONS 11B-404.2.8.1 AND 11B-404.2.8.2).
14. THE WATER CLOSET COMPARTMENT SHALL BE EQUIPPED WITH A DOOR THAT HAS AN AUTOMATIC-CLOSING DEVICE, AND SHALL HAVE A CLEAR, UNOBSTRUCTED OPENING WIDTH OF 34 INCHES.
15. THE INSIDE AND OUTSIDE OF THE COMPARTMENT DOOR SHALL BE EQUIPPED WITH A LOOP OR U-SHAPED HANDLE IMMEDIATELY BELOW THE LATCH. THE LATCH SHALL BE FLIP-OVER STYLE, SLIDING OR OTHER HARDWARE NOT REQUIRING THE USER TO GRASP OR TWIST.
16. EXCEPTION: IN GROUPS A, DIVISION 3, B, F, M, AND S OCCUPANCIES AND IN ALL CHURCHES, KEY-LOCKING HARDWARE MAY BE USED ON THE MAIN EXIT WHEN THE MAIN EXIT CONSISTS OF A SINGLE DOOR OR PAIR OF DOORS IF THERE IS A READILY VISIBLE, DURABLE SIGN ON OR ADJACENT TO THE DOOR STATING "THIS DOOR TO REMAIN UNLOCKED DURING BUSINESS HOURS". THE SIGN SHALL BE IN LETTERS NOT LESS THAN 1 INCH ON A CONTRASTING BACKGROUND. WHEN UNLOCKED, THE SINGLE DOOR OR BOTH LEAVES OF A PAIR OF DOORS MUST BE FREE TO SWING WITHOUT OPERATION OF ANY LATCHING DEVICE. THE USE OF THIS EXCEPTION MAY BE REVOKED BY THE BUILDING OFFICIAL [FOR HCD 1&2] ENFORCING AGENCY FOR DUE CAUSE.
17. EXIT DOORS SHALL BE FURNISHED & INSTALLED WITH HARDWARE ALLOWING DOOR TO BE OPENED FROM THE INSIDE WITHOUT THE USE OF A KEY OR ANY SPECIAL KNOWLEDGE OR EFFORT. PAIRS OF EXIT DOORS SHALL BE FURNISHED & INSTALLED WITH APPROVED AUTOMIAC FLUSH BOLTS ON ONE OF THE DOOR LEAVES AND NO SURFACE MOUNTED HARDWARE INSTALLED ON SAME LEAF. THE UNLATCHING OF BOTH DOOR LEAVES SHALL NOT REQUIRE MORE THAN ONE OPERATION.

RAMPS

1. ANY PATH OF TRAVEL SHALL BE CONSIDERED A RAMP IF ITS SLOPE IS GREATER THAN 1 FOOT OF VERTICAL RISE IN 20 FEET OF HORIZONTAL RUN (5% GRADIENT). THE LEAST POSSIBLE SLOPE SHALL BE USED FOR ANY RAMP (SECTION 11B-405.2).
2. WIDTH: PRIMARY ENTRANCE AND SPECIAL OCCUPANCY, PEDESTRIAN RAMPS SERVING PRIMARY ENTRANCES TO BUILDINGS HAVING AN OCCUPANT LOAD OF 300 OR MORE SHALL HAVE A MINIMUM CLEAR IN WIDTH OF 60 INCHES. RAMPS SERVING GROUP R OCCUPANCIES MAY BE 36 INCHES CLEAR WIDTH WHEN THE OCCUPANT LOAD IS 50 OR LESS. ALL OTHER PEDESTRIAN RAMPS SHALL HAVE A MINIMUM WIDTH OF 48 INCHES (SECTION 11B-405.5).
3. SLOPE: THE MAXIMUM SLOPE OF A RAMP THAT SERVES ANY EXIT WAY THAT PROVIDES ACCESS FOR PERSONS WITH PHYSICAL DISABILITIES OR IS IN THE PATH OF TRAVEL SHALL BE 1 FOOT OF VERTICAL RISE IN 12 FEET OF HORIZONTAL RUN (8.3% MAX. GRADIENT) (SECTION 11B-405.2). THE CROSS SLOPE OF RAMP SURFACES SHALL BE NO GREATER THAN 1 UNIT VERTICAL IN 48 UNITS HORIZONTAL (SECTION 11B-405.3).
4. A CURB, 2 INCHES HIGH MINIMUM, OR BARRIER SHALL BE PROVIDED THAT PREVENTS THE PASSAGE OF A 4 INCH DIAMETER SPHERE, WHERE ANY PORTION OF THE SPHERE IS WITHIN 4 INCHES OF THE FINISH FLOOR OR GROUND SURFACE. TO PREVENT WHEEL ENTRAPMENT, THE CURB OR BARRIER SHALL PROVIDE A CONTINUOUS AND UNINTERRUPED BARRIER ALONG THE LENGTH OF THE RAMP.

WALKS AND SIDEWALKS

1. CONTINUOUS SURFACE: WALKS AND SIDEWALKS SUBJECT TO THESE REGULATIONS SHALL HAVE A CONTINUOUS COMMON SURFACE, NOT INTERRUPTED BY STEPS OR BY ABRUPT CHANGES IN LEVEL EXCEEDING 1/2 INCH AND SHALL BE A MINIMUM OF 48 INCHES IN WIDTH. LEVEL CHANGES GREATER THAT 1/4 INCH AND UP TO 1/2 INCH SHALL BE BEVELED WITH A SLOPE NO GREATER THAN 1:2 (PER SECTION 11B-303.2 AND 11B-303.3). SURFACES SHALL BE SLIP RESISTANT AS FOLLOWS: (SECTION 11B-302.1).
   SLOPES LESS THAN 6 PERCENT: SLIP-RESISTANT AS DESCRIBED FOR A MEDIUM SALTED FINISH.
   SLOPES 6 PERCENT OR GREATER: SHALL BE SLIP-RESISTANT.
   SURFACE CROSS SLOPES: SHALL NOT EXCEED 1:48
2. GRATINGS: WALKS, SIDEWALKS, AND PEDESTRIAN WAYS SHALL BE FREE OF GRATING WHENEVER POSSIBLE. FOR GRATINGS LOCATED IN THE SURFACE OF ANY OF THESE AREAS, GRID OPENINGS IN GRATINGS SHALL BE LIMITED TO 1/2" (13 MM) IN THE DIRECTION OF TRAFFIC FLOW (SECTION 11B-302.3).
3. CHANGES IN LEVEL: ABRUPT CHANGES IN LEVEL ALONG ANY ACCESSIBLE ROUTE SHALL NOT EXCEED 1/2 INCH. WHEN CHANGES IN LEVEL DO OCCUR, THEY SHALL BE BEVELED WITH A SLOPE NO GREATER THAT 1 UNIT VERTICAL IN 2 UNITS HORIZONTAL. EXCEPT THAT LEVEL CHANGES NOT EXCEEDING 1/4 INCH MAY BE VERTICAL. WHEN CHANGES IN LEVELS GREATER THAN 1/2 INCH ARE NECESSARY THEY SHALL COMPLY WITH THE REQUIREMENTS FOR CURB RAMPS (SECTION 11B-303.4).
4. WARNING CURBS: ABRUPT CHANGES IN LEVEL, EXCEPT BETWEEN A WALK OR SIDEWALK AND AN ADJACENT STREET OR DRIVEWAY, EXCEEDING 4 INCHES IN A VERTICAL DIMENSION, SUCH AS AT PLANTERS OR FOUNDATIONS LOCATED IN OR ADJACENT TO WAKS, SIDEWALKS OR OTHER PEDESTRIAN WAYS, SHALL BE INDENTIFIED BY CURBS PROJECTING AT LEAST 6 INCHES IN HEIGHT ABOVE THE WALK OR SIDEWALK SURFACE TO WARN THE BLIND OF A POTENTIAL DROP OFF. WHEN A GUARDRAIL OR HANDRAIL IS PROVIDED, NO CURB IS REQUIRED WHEN A GUIDE RAIL IS PROVIDED CENTERED 2 INCHES MINIMUM AND 4 INCHES MAXIMUM ABOVE THE SURFACE OF THE WALK OR SIDEWALK. (SECTION 11B-303.5).
5. PROVIDE A LEVEL AREA NOT LESS THAN REQUIRED (TABLE AND FIGURE 11B-404.2.4.1).
6. WALKS WITH CONTINUOUS GRADIENTS SHALL HAVE LEVEL AREAS AT LEAST 5 FEET IN LENGTH AT INTERVALS OF 400 FEET MAXIMUM (SECTION 11B-403.7).
7. A 36 INCH WIDE DETECTABLE WARNING MATERIAL SHALL BE PROVIDED AT BOUNDARIES BETWEEN WALKWAYS AND VEHICULAR WAYS. MATERIAL SHALL COMPLY WITH SECTION 11B-705.1.1

SANITARY FACILITIES IDENTIFICATION

1. DOORWAYS LEADING TO MEN'S SANITARY FACILITIES SHALL BE INDENTIFIED BY AN EQUILATERAL TRIANGLE 1/4 INCH THICK WITH EDGES 12 INCHES LONG AND A VERTEX POINTING UPWARD. WOMEN'S SANITARY FACILITIES SHALL BE IDENTIFIED BY A CIRCLE, 1/4 INCH THICK AND 12 INCHES IN DIAMETER. UNISEX SANITARY FACILITIES SHALL BE IDENTIFIED BY A CIRCLE 1/4 INCH THICK, 12 INCHES IN DIAMETER WITH A 1/4 INCH THICK TRIANGLE SUPERIMPOSED ON THE CIRCLE AND WITHIN THE 12 INCH DIAMETER. THESE GEOMETRIC SYMBOLS SHALL BE CENTERED ON THE DOOR AT A HEIGHT OF 60 INCHES AND THEIR COLOR AND CONTRAST SHALL BE DISTINCTLY DIFFERENT FROM THE COLOR AND CONTRAST OF THE DOOR.
2. SEE ACCESSIBLITY SIGNAGE CRITERIA FOR ADDITIONAL REQUIREMENTS.

BATHING AND TOILET FACILITIES

1. PASSAGEWAYS LEADING TO SANITARY FACILITIES SHALL HAVE A CLEAR ACCESS AS SPECIFIED IN SECTION 11B-402. ALL DOORWAYS LEADING TO SUCH SANITARY FACILITIES SHALL HAVE:
   AN UNOBSTRUCTED CLEAR OPENING WIDTH OF 32 INCHES (813 MM).
   A LEVEL AND CLEAR AREA NOT LESS THAN REQUIRED (TABLE AND FIGURE 11B-404.2.4.1)
2. BATHING FACILITIES (NOT APPLICABLE).
3. TOILET FACILITIES (SECTION 11B-603).
   MULTIPLE-ACCOMMODATION TOILET FACILITITIES SHALL HAVE THE FOLLOWING:
   CLEAR SPACE: A WATER CLOSET FIXTURE LOCATED IN A COMPARTMENT SHALL PROVIDE A MINIMUM 17 INCHES AND 18 INCHES MAXIMUM FROM THE CENTERLINE OF THE WATER CLOSET TO THE WALL, EXCEPT THAT THE WATER CLOSET SHALL BE A MINIMUM 17 INCHES AND 19 INCHES MAXIMUM FROM THE CENTERLINE OF WATER CLOSET TO THE WALL IN AMBULATORY ACCESSIBLE TOILET COMPARTMENTS. A MINIMUM 48 INCHES LONG CLEAR SPACE SHALL BE PROVIDED IN FRONT OF THE WATER CLOSET IF THE COMPARTMENT HAS AN END-OPENING DOOR (FACING THE WATER CLOSET). A MINIMUM 60 INCH LONG CLEAR SPACE SHALL BE PROVIDED IN A COMPARTMENT WITH THE DOOR LOCATED AT THE SIDE AND OPENING OUT. GRAB BARS SHALL NOT PROJECT MORE THAN 3 INCHES IN THE CLEAR SPACES AS SPECIFIED ABOVE.
   COMPARTMENT DOORS: WATER CLOSET COMPARTMENT SHALL BE EQUIPPED WITHA DOOR THAT HAS AN AUTOMATIC-CLOSING DEVICE, AND SHALL HAVE A CLEAR, UNOBSTRUCTED OPENING WIDTH OF 32 INCHES WHEN LOCATED AT THE END AND 34 INCHES WHEN LOCATED AT THE SIDE WITH THE DOOR POSITIONED AT AN ANGLE OF 90 DEGREES FROM ITS CLOSED POSITION (SECTION 11B-604.8.1.2).
   THE INSIDE AND OUTSIDE OF THE COMPARTMENT DOOR SHALL BE EQUIPPED WITH A LOOP OR U-SHAPED HANDLE IMMEDIATELY BELOW THE LATCH, MOUNTING HEIGHT OF 34 INCHES TO 44 INCHES A.F.F. THE LATCH SHALL BE FLIP-OVER STYLE, SLIDING, OR OTHER HARDWARE NOT REQUIRING THE USER TO GRASP OR TWIST. EXCEPT FOR DOOR-OPENING WIDTHS AND DOOR SWINGS, A CLEAR, UNOBSTRUCTED ACCESS OF NOT LESS THAN 44 INCHES SHALL BE PROVIDED TO WATER CLOSET COMPARTMENTS DESIGNED FOR USE BY PERSONS WITH DISABILITIES AND THE SPACE IMMEDIATELY IN FRONT OF A WATER CLOSET COMPARTMENT SHALL NOT BE LESS THAN 48 INCHES (1219 MM) AS MEASURED AT RIGHT ANGLES TO COMPARTMENT DOOR IN ITS CLOSED POSITION.
4. GRAB BARS
   LOCATION: GRAB BARS LOCATED ON EACH SIDE, OR ONE SIDE AND THE BACK OF THE ACCESSIBLE TOILET STALL OR COMPARTMENT, SHALL BE SECURELY ATTACHED 33 INCHES MINIMUM AND 36 INCHES MAXIMUM ABOVE AND PARALLEL TO THE FLOOR. SIDE GRAB BARS SHALL BE 42 INCHES MINIMUM LOCATED 12 INCHES MAXIMUM FROM REAR WALL, EXTENDING 54 INCHES MINIMUM FROM THE REAR WALL WITH THE FRONT END POSITIONED 24 INCHES IN FRONT OF THE WATER CLOSET STOOL. REAR GRAB BARS SHALL BE 36 INCHES LONG MINIMUM AND EXTEND FROM THE CENTERLINE OF WATER CLOSET 12 INCHES MINIMUM ON ONE SIDE AND 24 INCHES MINIMUM ON THE OTHER SIDE(SECTIONS 11B 609.4., 11B-604.5.1 AND 11B-604.5.2).
   DIAMETER OR WIDTH: THE DIAMETER OR WIDTH OF THE GRIPPING SURFACES OF A GRAB BAR SHALL BE 1-1/4 INCHES TO 2 INCHES (32 MM TO 38 MM) OR THE SHAPE SHALL PROVIDE AN EQUIVALENT GRIPPING SURFACE. IF GRAB BARS ARE MOUNTED ADJACENT TO A WALL, THE SPACE BETWEEN THAT WALL AND GRAB BARS SHALL BE 1-1/2 INCHES (38 MM). SEE FIGURE 11B-609.2.2 (11B-609.2).
   STRUCTURAL STRENGTH: THE STRUCTURAL STRENGTH OF GRAB BARS, TUB AND SHOWER SEATS, FASTENERS, AND MOUNTING DEVICES SHALL MEET THE REQUREMENTS IN SECTIONS 11B-609.8. GRAB BARS SHALL NOT ROTATE WITHIN THEIR FITTINGS. (SECTION 11B-609.6)
   SURFACE: A GRAB BAR AND ANY WALL OR OTHER SURFACE ADJACENT TO IT SHALL BE FREE OF ANY SHARP OR ABRASIVE ELEMENTS. EDGES SHALL HAVE A MINIMUM RADIUS OF 1/8 INCH (3.2 MM). (SECTION 11B-609.5)
5. TOILET ROOM FIXTURES AND ACCESSORIES
   LAVATORY FIXTURES: A CLEAR FLOOR SPACE 30 INCHES BY 48 INCHES SHALL BE PROVIDED IN FRONT OF A LAVATORY TO ALLOW A FORWARD APPROACH. SUCH CLEAR FLOOR SPACE SHALL ADJOIN OR OVERLAP AN ACCESSIBLE ROUTE AND SHALL EXTEND A MAXIMUM OF 19 INCHES INTO KNEE AND TOE SPACE UNDERNEATH THE LAVATORY. (SECTIONS 11B-305.3 AND 11B-306.2.2, EXCEPTION)
   MIRRORS SHALL BE MOUNTED WITH THE BOTTOM EDGE OF THE REFLECTIVE SURFACE NO HIGHER THAN 40 INCHES FROM THE FLOOR. MIRRORS NOT LOCATED ABOVE LAVATORIES OR COUNTERTOPS SHALL BE MOUNTED WITH THE BOTTOM EDGE OF THE REFLECTIVE SURFACE NO HIGHER THAN 35 INCHES FROM THE FLOOR (SECTION 11B-603.3).
   WHERE TOWEL, SANITARY NAPKINS,, WASTE RECEPTACLE, AND OTHER SIMILAR DISPENSING AND DISPOSAL FIXTURES ARE PROVIDED, AT LEAST ONE OF EACH TYPE SHALL BE LOCATED WITH ALL OPERABLE PARTS, INCLUDING COIN SLOTS, WITHIN 40 INCHES FROM THE FINISHED FLOOR (SECTION 11B-603.5).
   TOILET TISSUE DISPENSERS SHALL BE LOCATED ON THE WALL WITHIN 7-9 INCHES OF THE FRONT EDGE OF THE TOILET SEAT, MOUNTED BELOW THE GRAB BAR, AT A MINIMUM HEIGHT OF 19 INCHES. DISPENSERS THAT CONTROL DELIVERY OR THAT DO NOT PERMIT CONTINUOUS PAPER FLOW SHALL NOT BE USED. LIMIT THE PROJECTION OF A SURFACE OR SEMI-RECESSED MOUNTED DISPENSER FROM ENCROACHING MORE THAN 3 INCHES FROM THE FACE OF THE WALL OR PARTITION, AND NO CLOSER THAN 1-1/2 INCHES TO THE TANGENT POINT OF THE GRAB BAR (SECTION 11B-604.7).
   WHERE URINALS ARE PROVIDED, AT LEAST ONE SHALL HAVE A CLEAR FLOOR SPACE 30 INCHES BY 48 INCHES IN FRONT OF THE URINAL TO ALLOW FORWARD APPROACH (SECTION 11B-605.3).

DRINKING FOUNTAINS

1. THE FLOW OF WATER SHALL BE ACTIVATED BY A MANUALLY OPERATED SYSTEM THAT IS FRONT MOUNTED OR SIDE MOUNTED AND LOCATED WITHIN 6 INCHES OF THE FRONT EDGE OF THE FOUNTAIN OR AN AUTOMATIC ELECTRICALLY CONTROLLED DEVICE. CBC 11B-602.3
2. THE SPOUT SHALL BE LOCATED 15 INCHES MINIMUM FROM THE VERTICAL SUPPORT AND 5 INCHES MAXIMUM FROM THE FRONT EDGE OF THE UNIT, INCLUDING BUMPERS PER CBC 11B-602.5
3. THE SPOUT SHALL PROVIDE A FLOW OF WATER 4 INCHES HIGH MINIMUM AND SHALL BE LOCATED 5 INCHES MAXIMUM FROM THE FRONT OF THE UNIT. THE ANGLE OF THE WATER STREAM SHALL BE MEASURED HORIZONTALLY RELATIVE TO THE FRONT FACE OF THE UNIT PER CBC 11B-602.6
4. WHERE THE SPOUTS ARE LOCATED LESS THAN 3 INCHES OF THE FRONT OF THE UNIT THE ANGLE OF THE WATER STREAM SHALL BE 30 DEGREES MAXIMUM PER CBC 11B-602.6
5. WHERE THE SPOUTS ARE LOCATED BETWEEN 3 INCHES AND 5 INCHES MAXIMUM FROM THE FRONT OF THE UNIT, THAN ANGLE OF THE WATER STREAM SHALL BE 15 DEGREES MAXIMUM PER CBC 11B-602.6
6 THE SPOUT OUTLETS OF DRINKING FOUNTAINS FOR STANDING PERSONS SHALL BE 38 INCHES MINIMUM AND 43 INCHES MAXIMUM ABOVE THE FINISHED FLOOR OR GROUND PER CBC 11B-602.7
7 WALL AND POST MOUNTED CANTILEVERED DRINKING FOUNTAINS SHALL BE 18 INCHES MINIMUM AND 19 INCHES MAXIMUM IN DEPTH PER CBC 11B-602.8
8 THE PROTECTED AREA WITHIN WHICH A DRINKING FOUNTAIN IS LOCATED SHALL BE 32" WIDE MINIMUM AND 18 INCHES DEEP MINIMUM AND SHALL COMPLY WITH CBC 11B-305.7

LOCKERS

1. AT LEAST ONE LOCKER AND NOT LESS THAN 5% OF ALL LOCKERS SHALL BE MADE ACCESSIBLE TO PERSONS WITH DISABILITIES. (SECTION 11B-225.2.1)
2. A CLEAR FLOOR SPACE OF AT LEAST 30 INCHES BY 48 INCHES THAT ALLOWS EITHER A FORWARD OR PARALLEL APPROACH BY A PERSON USING A WHEELCHAIR SHALL BE PROVIDED. (SECTION 11B-305)
3. HEIGHT: FOR FORWARD APPROACH, THE MAXIMUM HIGH FORWARD REACH SHALL BE 48 INCHES AND THE MINIMUM LOW FORWARD REACH IS 15 INCHES.. FOR PARALLEL APPROACH, THE MAXIMUM HIGH SIDE REACH SHALL BE 48 INCHES AND THE LOW SIDE REACH SHALL BE MINIMUM 15 INCHES ABOVE THE FLOOR. (SECTION 11B-308)
4. HARDWARE: LATCH & LOCKING HARDWARE SHALL BE OPERABLE WITH ONE HAND AND SHALL NOT REQUIRE TIGHT GRASPING, PINCHING OR TWISTING OF THE WRIST. THE FORCE REQUIRED TO ACTIVATE CONTROLS SHALL BE NO GREATER THAN 5 POUNDS OF FORCE. (SECTION 11B-309.4)

ACCESSIBILITY SIGNAGE

1. INTERNATIONAL SYMBOL OF ACCESSIBILITY: THE FOLLOWING ELEMENTS AND SPACES OF ACCESSIBLE FACILITIES SHALL BE IDENTIFIED BY THE INTERNATIONAL SYMBOL OF ACCESSIBILITY:
   ACCESSIBLE PARKING SPACES.
   ACCESSIBLE AREA OF REFUGE.
   ACCESSIBLE PASSENGER LOADING ZONES.
   ACCESSIBLE TOILET AND BATHING FACILITIES.
   ALL MAIN ENTRY DOORS.
2. OTHER SIGNS: INACCESSIBLE BUILDING ENTRANCES, INACCESSIBLE PUBLIC TOILETS AND BATHING FACILITIES, AND ELEVATORS NOT ON AN ACCESSIBLE ROUTE SHALL BE PROVIDED WITH DIRECTIONAL SIGNAGE INDICATING THE ROUTE TO THE NEARST SIMILAR ACCESSIBLE ELEMENT (SECTIONS 11B-216.3, 11B-216.6 AND 11B-216.9.2))
   AT EXITS SERVING A REQUIRED ACCESSIBLE SPACE, BUT NOT PROVIDING AN APPROVED ACCESSIBLE MEANS OF EGRESS, SIGNS SHALL BE INSTALLED INDICATING THE LOCATION OF ACCESSIBLE MEANS OF EGRESS. (SECTION 11B-216.4.3)
3. DESIGN: THE INTERNATIONAL SYMBOL OF ACCESSIBILITY SHALL BE THE STANDARD USED TO INDENTIFY FACILITIES THAT ARE ACCESSIBLE TO AND USABLE BY PHYSICALLY DISABLED PERSONS AS SET FORTH IN THESE BUILDING STANDARDS AND AS SPECIFICALLY REQURED IN THESE NOTES (SECTION 11B-703.7.2.1).
4. COLOR OF SYMBOL: THE SYMBOL SPECIFIED ABOVE SHALL CONSIST OF A WHITE FIGURE ON A BLUE BACKGROUND. THE BLUE SHALL BE EQUAL TO COLOR NO. 15090 IN FEDERAL STANDARD 595B. (SECTION 11B-703.7.2.1)
   EXCEPTION: THE APPROPRIATE ENORCEMENT AGENCY MAY APPROVE SPECIAL SIGNS AND IDENTIFICATION NECESSARY TO COMPLEMENT DECOR OR UNIQUE DESIGN WHEN IT IS DETERMINED THAT SUCH SIGNS AND IDENTIFICATION PROVIDE ADEQUATE DIRECTION TO PERSONS WITH DISABILITIES.(SECTION 11B-703.7.2.1, EXCEPTION)
5. CONTRAST AND FINISH: CHARACTER AND SYMBOLS SHALL CONTRAST WITH THEIR BACKGROUND OR DARK CHARACTERS ON A LIGHT BACKGROUND. THE (FINISH OF) CHARACTERS AND BACKGROUND OF SIGNS SHALL BE EGGSHELL, MATTE, OR OTHER NON-GLARE FINISH (SECTION 11B-703.5.1 AND 11B-703.7.1).
6. PROPORTIONS: CHARACTERS SHALL BE SELECTED FROM FONTS WHERE THE WIDTH OF THE UPPERCASE LETTER "O" IS 60 PERCENT MINIMUM AND 110 PERCENT MAXIMUM OF THE HEIGHT OF THE UPPERCASE LETTER "I" (SECTION 11B-703.5.4).
7. CHARACTER HEIGHT: MINIMUM CHARACTER HEIGHT SHALL COMPLY WITH TABLE 11B-703.5.5. VIEWING DISTANCE SHALL BE MEASURED AS THE HORIZONTAL DISTANCE BETWEEN THE CHARACTER AND AN OBSTRUCTION PREVENTING FURTHER APPROACH TOWARDS THE SIGN. CHARACTER HEIGHT SHALL BE BASED ON THE UPPERCASE LETTER "I" (SECTION 11B-703.5.5).
8. WHERE PERMANENT IDENTIFICATION IS PROVIDED FOR ROOMS AND SPACES, RAISED LETTERS SHALL ALSO BE PROVIDED AND SHALL BE ACCOMPANIED BY BRAILLE (SECTION 11B-703.2).
9. RAISED CHARACTERS AND PICTORIAL SYMBOL SIGNS: WHEN RAISED CHARACTERS OR SYMBOLS ARE USED, THEY SHALL CONFORM TO THE FOLLOWING REQUIREMENTS (11B-703.2 AND 11B-703.4).
   CHARACTER TYPE: LETTERS AND NUMBERS ON SIGNS SHALL BE RAISED 1/32 INCH MINIMUM AND SHALL BE SANS-SERIF UPPERCASE CHARACTERS ACCOMPANIED BY GRADE 2 BRAILLE. (SECTION 11B-703.2.1, 11B-703.2.3 AND 11B-703.3)
   CHARACTER SIZE: RAISED CHARACTERS OR SYMBOLS SHALL BE A MINIMUM OF 5/8 INCH HIGH TO A MAXIMUM HEIGHT OF 2 INCHES. (SECTION 11B-703.2.5)
   PICTORIAL SYMBOL SIGNS (PICTOGRAMS NONGEOMETRIC): PICTORIAL SYMBOL SIGNS (PICTOGRAMS) SHALL BE ACCOMPANIED BY THE EQUIVALENT VERBAL DESCRIPTION PLACED DIRECTLY BELOW THE PICTOGRAM. THE BORDER DIMENSION OF THE PICTOGRAM SHALL BE A MINIMUM OF 6 INCHES IN HEIGHT. (SECTION 11B-703.6.1)
   CHARACTER PLACEMENT: CHARACTERS AND BRAILLE SHALL BE IN A HORIZONTAL FORMAT. BRAILLE SHALL BE PLACED A MINIMUM OF 3/8 INCH AND A MAXIMUM OF 1/2 INCH DIRECTLY BELOW THE TACTILE CHARACTERS (FLUSH LEFT OR CENTERED). WHEN TACTILE TEXT IS MULTILINED, ALL BRAILLE SHALL BE PLACED TOGETHER BELOW ALL LINES OF TACTILE TEXT. (SECTION 11B-703.3.2)
10. BRAILLE: CONTRACTED (GRADE 2) BRAILLE SHALL BE USED WHEREVER BRAILLE IS REQUIRED IN OTHER PORTIONS OF THESE STANDARDS. DOTS SHALL BE 1/10 INCH ON CENTER IN EACH CELL WITH 2/10 INCH SPACE BETWEEN CELLS DOTS SHALL BE RAISED A MINIMUM OF 1/40 INCH ABOVE THE BACKGROUND. BRAIL DOTS SHALL BE DOMED OR ROUNDED (TABLE 11B-703.3.1).
11. MOUNTING LOCATION AND HEIGHT: WHERE PERMANENT IDENTIFICATION SIGNS ARE PROVIDED FOR ROOMS AND SPACES, SIGNS SHALL BE INSTALLED ON THE WALL ADJACENT TO THE LATCH SIDE OF THE DOOR ON THE APPROACH SIDE OF THE DOOR AS ONE ENTERS THE ROOM OR SPACE. WHERE THERE IS NO WALL SPACE ON THE LATCH SIDE, INCLUDING AT DOUBLE LEAF DOORS, SIGNS SHALL BE PLACED ON THE NEAREST ADJACENT WALL, PREFERABLY ON THE RIGHT. SIGNS CONTAINING TACTILE CHARACTERS SHALL BE LOCATED SO THAT A CLEAR FLOOR SPACE OF 18 INCHES MINIMUM BY 18 INCHES MINIMUM, CENTERED ON THE TACTILE CHARACTERS, IS PROVIDED BEYOND THE ARC OF ANY DOOR SWING BETWEEN THE CLOSED POSITION AND 45 DEGREE OPEN POSITION. TACTILE CHARACTERS ON SIGNS SHALL BE LOCATED 48 INCHES MINIMUM ABOVE THE FINISH FLOOR OR GROUND SURFACE, MEASURED FROM THE BASELINE OF THE LOWEST BRAILLE CELLS AND 60 INCHES MAXIMUM ABOVE FINISH FLOOR OR GROUND SURFACE, MEASURED FROM THE BASELINE OF THE HIGHEST LINE OF RAISED CHARACTERS. (SECTION 11B-703.4.1 AND 11B-703.4.2).
12. ENTRANCE SIGNS: ALL BUILDING ENTRANCES THAT ARE ACCESSIBLE TO AND USABLE BY PERSONS WITH DISABILITIES SHALL BE INDENTIFIED WITH AT LEAST ONE INTERNATIONAL SYMBOL OF ACCESSIBILITY SIGN AND WITH ADDITIONAL DIRECTIONAL SIGNS (UTILIZING THE SYMBOL), AS REQUIRED AT JUNCTIONS WHERE THE ACCESSIBLE ROUTE OF TRAVEL DIVERGES FROM THE REGULAR CIRCULATION PATH, TO BE VISIBLE TO PERSONS ALONG APPROACHING CIRCULATION PATHS. (SECTION 11B-216.6)

LDA
DESIGNERS & ARCHITECTS

Architect:
LDA Partners, Inc.
Designers & Architects
222 Central Court
Stockton, CA 95204
209.943.0405
www.ldapartners.com

LICENSED ARCHITECT
ERIC WILLIAM WOLLE
C28388
September 2021
STATE OF CALIFORNIA

Client:
LATHROP-MANTECA FIRE PROTECTION DISTRICT
19001 SOMERSTON PARKWAY
LATHROP, CA 95330
209.941.5102

Project:
FIRE STATION 31 UPGRADES

800 J STREET
LATHROP CA 95330

Project No.: 757-01-20
Drawn By: Author
Checked By: Checker

No.	Description	Date	By

3RD SUBMITTAL - BLDG. DEPT.

12/9/2020

ACCESSIBILITY STANDARDS

G4.00

12/9/2020 8:47:49 PM

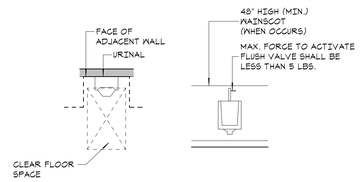

* WHEN URINAL OCCURS WITHIN AN ALCOVE DEEPER THAN 24" DEEP PROVIDE 3'-0" CLEAR, AS SHOWN.

11 / 64.01 URINAL
1/4" = 1'-0"

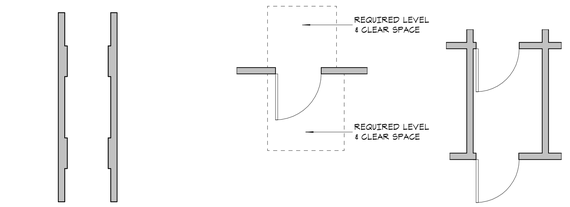

6 / 64.01 WHEEL CHAIR ACCESS
1/4" = 1'-0"

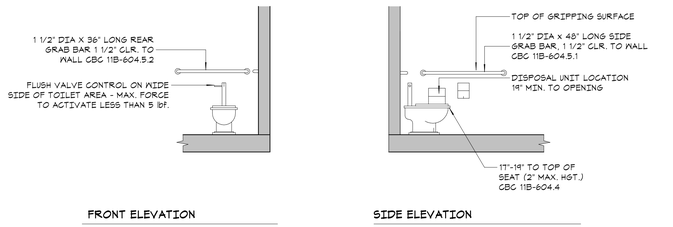

17 / 64.01 WATER CLOSET
3/8" = 1'-0"

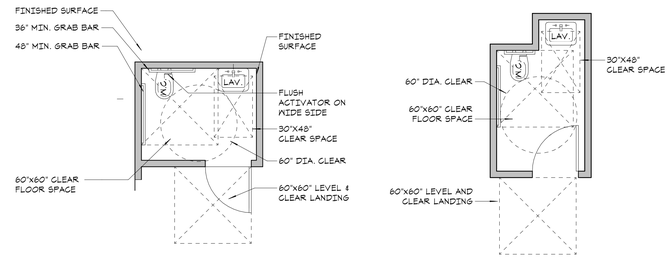

7 / 64.01 MINIMUMS @ SINGLE TOILET COMPARTMENT
1/4" = 1'-0"

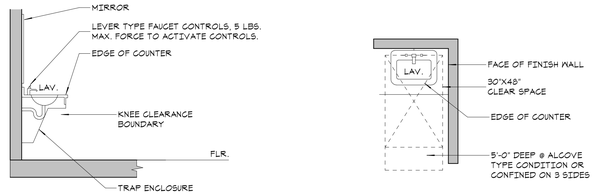

NOTE:
ALL PIPING UNDERNEATH LAVATORIES SHALL BE INSULATED OR COVERED

18 / 64.01 LAV COUNTER
3/8" = 1'-0"

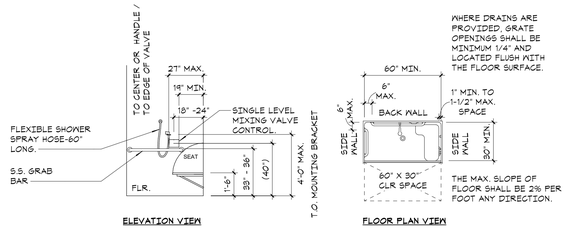

19 / 64.01 ACCESSIBLE SHOWER
1/4" = 1'-0"

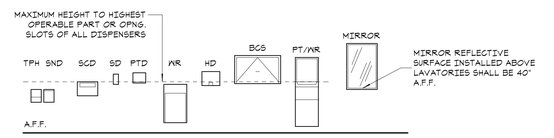

9 / 64.01 ELEVATION OF TOILET ACCESSORIES
1/4" = 1'-0"

LDA DESIGNERS & ARCHITECTS

Architect:
LDA Partners, Inc.
Designers & Architects
222 Central Court
Stockton, CA 95204
209.943.0405
www.ldapartners.com

LICENSED ARCHITECT
JR C. WILLIAM ROSE
C28388
September 2021
STATE OF CALIFORNIA

Client:
LATHROP-MANTECA FIRE PROTECTION DISTRICT
19001 SOMERSTON PARKWAY
LATHROP, CA 95330
209.941.5102

Project:
FIRE STATION 31 UPGRADES

800 J STREET
LATHROP CA 95330

Project No.: 757-01-20
Drawn By: Author
Checked By: Checker

No.	Description	Date	By

3RD SUBMITTAL - BLDG. DEPT.

12/9/2020

ACCESSIBILITY DETAILS

G4.01

D:\2020\757-01-20 FIRE STATION 31 UPGRADES\Drawings\Revit\757-01-20 FIRE STATION 31 UPGRADES_R20_Central_Author.rvt 12/9/2020 8:45:18 PM

GENERAL NOTES:

1. ALL IMPROVEMENTS SHALL BE CONSTRUCTED IN STRICT ACCORDANCE WITH THE FOLLOWING: CITY OF LATHROP STANDARD SPECIFICATIONS, AND ALL AMENDMENTS TO DATE, CALIFORNIA DEPARTMENT OF TRANSPORTATION STANDARD SPECIFICATIONS (CALTRANS) (LATEST EDITION), WHERE APPLICABLE. ALL WORK SHALL BE UNDER THE INSPECTION OF THE RESPECTIVE ENTITY.

2. IT IS INTENDED THAT THESE PLANS AND SPECIFICATIONS REQUIRE ALL LABOR AND MATERIALS NECESSARY AND PROPER FOR THE WORK CONTEMPLATED AND THAT THE WORK BE COMPLETED IN ACCORDANCE WITH THEIR TRUE INTENT AND PURPOSE. THE CONTRACTOR SHALL NOTIFY THE ENGINEER IMMEDIATELY REGARDING ANY DISCREPANCIES AND AMBIGUITIES WHICH MAY EXIST IN THE PLANS AND SPECIFICATIONS. IF THE PLANS OR SPECIFICATIONS DESCRIBE PORTIONS OF THE WORK IN GENERAL TERMS BUT NOT IN COMPLETE DETAIL, IT IS UNDERSTOOD THAT ONLY THE BEST GENERAL PRACTICE IS TO PREVAIL AND THAT ONLY MATERIALS AND WORKMANSHIP OF THE FIRST QUALITY ARE TO BE USED.

3. CONSTRUCTION STAKING FOR GRADING, CURB, GUTTER, SIDEWALK, SANITARY SEWER, STORM DRAIN AND WATER SHALL BE DONE UNDER THE DIRECTION OF M.C.R. ENGINEERING. THE CONTRACTOR SHALL NOTIFY THE ENGINEER SEVENTY-TWO (72) HOURS IN ADVANCE OF THIS NEED FOR STAKING. ANY STAKING REQUESTED BY THE CONTRACTOR OR HIS SUBCONTRACTORS THAT IS ABOVE AND BEYOND NORMAL STANDARD SUBDIVISION STAKING NEEDS, WILL BE SUBJECT TO AN EXTRA BACK CHARGE TO THE CONTRACTOR.

4. THE CONTRACTOR SHALL EXERCISE DUE CAUTION AND SHALL CAREFULLY PRESERVE BENCH MARKS, REFERENCE POINTS AND ALL SURVEY STAKES, AND SHALL BEAR ALL EXPENSE FOR REPLACEMENT AND/OR ERRORS CAUSED BY THEIR UNNECESSARY LOSS OR DISTURBANCE.

5. CONTRACTOR AGREES THAT HE SHALL ASSUME SOLE AND COMPLETE RESPONSIBILITY FOR JOB SITE CONDITIONS DURING THE COURSE OF CONSTRUCTION OF THIS PROJECT, INCLUDING SAFETY OF ALL PERSONS AND PROPERTY; THAT THIS REQUIREMENT SHALL APPLY CONTINUOUSLY AND NOT BE LIMITED TO NORMAL WORKING HOURS; AND THAT THE CONTRACTOR SHALL DEFEND, INDEMNIFY AND HOLD THE OWNER, ENGINEER AND THE CITY HARMLESS FROM ANY AND ALL LIABILITY, REAL OR ALLEGED, IN CONNECTION WITH THE PERFORMANCE OF WORK ON THIS PROJECT, EXCEPTING FOR LIABILITY ARISING FROM THE SOLE NEGLIGENCE OF THE OWNER OR THE ENGINEER.

6. UNLESS OTHERWISE STATED, ALL STATIONS INDICATED ON THE IMPROVEMENT PLANS ARE REFERENCED TO THE CENTERLINE OF THE STREET. ALL STATIONS OFF CENTER ARE PERPENDICULAR TO OR RADIALLY OPPOSITE CENTERLINE STATIONS, UNLESS OTHERWISE NOTED.

7. THE CONTRACTOR SHALL BE HELD RESPONSIBLE FOR ANY FIELD CHANGES MADE WITHOUT WRITTEN AUTHORIZATION FROM THE CITY ENGINEER.

8. THE CONTRACTOR SHALL PROVIDE ALL LIGHTS, SIGNS, BARRICADES, FLAG MAN OR OTHER DEVICES NECESSARY FOR PUBLIC SAFETY IN ACCORDANCE WITH THE CURRENT ISSUE OF "MANUAL OF TRAFFIC CONTROLS, WARNING SIGNS, LIGHTS AND DEVICES FOR USE IN PERFORMANCE OF WORK UPON HIGHWAY" PUBLISHED BY THE STATE OF CALIFORNIA BUSINESS AND TRANSPORTATION AGENCY.

9. THE OFFICE OF THE CITY ENGINEER SHALL BE NOTIFIED AT LEAST 24 HOURS IN ADVANCE OF ANY WORK.

10. P. G. & E., TELEPHONE AND CABLE TV UNDERGROUND WORK SHALL BE COMPLETED PRIOR TO CONSTRUCTION OF THE CURB, GUTTER, SIDEWALK AND PAVING.

11. THE CITY OF LATHROP AND ASSOCIATED UTILITY COMPANY AND RESIDENCES TO BE AFFECTED SHALL BE NOTIFIED IMMEDIATELY UPON ANY UTILITY SERVICE DISRUPTION OTHER THAN SPECIFIED ON THESE IMPROVEMENT PLANS AND A 24 HOUR NOTICE SHALL BE GIVEN FOR ANY PLANNED DISRUPTION.

12. THE CONTRACTOR SHALL OBTAIN AN ENCROACHMENT PERMIT FROM THE CITY OF LATHROP, DEPARTMENT OF PUBLIC WORKS OR ANY OTHER APPLICABLE AGENCIES PRIOR TO COMMENCEMENT OF WORK WITHIN EXISTING CITY RIGHT-OF-WAY. THE CONTRACTOR SHALL BE RESPONSIBLE FOR ALL PERMITS AND LICENSES REQUIRED FOR THE CONSTRUCTION AND COMPLETION OF THE PROJECT.

13. STREET SIGNS, TRAFFIC CONTROL SIGNS, AND PAVEMENT MARKINGS SHALL BE PROVIDED AND INSTALLED BY THE CONTRACTOR AT LOCATIONS ESTABLISHED BY THE ENGINEER.

14. ASPHALT CONCRETE SHALL BE PLACED ONLY WHEN THE ATMOSPHERIC TEMPERATURE IS ABOVE 50°F.

15. DRAWING NUMBERS SHOWN ON THE PLANS REFER TO DRAWINGS CONTAINED IN THE CITY OF LATHROP STANDARD SPECIFICATIONS, THUS: (I.E. DWG. ST-1).

16. PRIOR TO COMMENCING ANY WORK, IT SHALL BE THE CONTRACTOR'S RESPONSIBILITY TO HAVE EACH UTILITY COMPANY LOCATE, IN THE FIELD, THEIR MAIN AND SERVICE LINES. THE CONTRACTOR SHALL NOTIFY MEMBERS OF THE UNDERGROUND SERVICE ALERT (U.S.A.) 48 HOURS IN ADVANCE OF PERFORMING ANY EXCAVATION WORK BY CALLING THE TOLL-FREE NUMBER (800) 642-2444. THE CONTRACTOR SHALL RECORD THE U.S.A. ORDER NUMBER AND FURNISH ORDER NUMBER TO OWNER PRIOR TO ANY EXCAVATION. IT SHALL BE THE CONTRACTOR'S SOLE RESPONSIBILITY TO PROTECT ALL EXISTING UTILITIES SO THAT NO DAMAGE RESULTS TO THEM DURING THE PERFORMANCE OF THIS CONTRACT. ANY REPAIRS NECESSARY TO DAMAGED UTILITIES SHALL BE PAID FOR BY THE CONTRACTOR. THE CONTRACTOR SHALL BE REQUIRED TO COOPERATE WITH OTHER CONTRACTORS AND UTILITY COMPANIES INSTALLING NEW STRUCTURES, UTILITIES AND SERVICE TO THE DEVELOPMENT.

17. THE CONTRACTOR SHALL BE RESPONSIBLE FOR PROTECTING EXISTING IMPROVEMENTS FROM DAMAGE. COST OF REPLACING EXISTING IMPROVEMENTS SHALL BE INCLUDED IN THE UNIT PRICE BID FOR ITEMS REQUIRING REMOVAL AND REPLACEMENT OF EXISTING IMPROVEMENTS.

18. WHENEVER PAVEMENT IS BROKEN OR CUT IN THE INSTALLATION OF THE WORK COVERED BY THESE SPECIFICATIONS, THE PAVEMENT SHALL BE REPLACED, AFTER PROPER BACKFILLING, WITH PAVEMENT MATERIALS EQUAL TO OR BETTER THAN THE MATERIALS USED IN THE ORIGINAL PAVING. THE FINISHED PAVEMENT SHALL BE SUBJECT TO THE APPROVAL OF THE CITY ENGINEER, OR CALTRANS, WHERE APPLICABLE.

19. PAYMENT FOR PAVEMENT WILL BE MADE ONLY FOR AREAS SHOWN ON THE PLANS REPLACEMENT OF PAVEMENT WHICH IS BROKEN OR CUT DURING THE INSTALLATION OF THE WORK COVERED BY THESE SPECIFICATIONS, AND WHICH LIES OUTSIDE OF SAID AREAS, SHALL BE INDICATED IN THE CONTRACTOR'S UNIT PRICE FOR PAVEMENT, AND NO ADDITIONAL PAYMENT SHALL BE MADE FOR SUCH WORK.

20. EXCAVATIONS OF 5 FEET OR MORE IN DEPTH WILL REQUIRE AN EXCAVATION PERMIT FROM THE STATE OF CALIFORNIA DEPARTMENT OF INDUSTRIAL SAFETY. FOR TRENCHES 5 FEET OF MORE IN DEPTH, THE CONTRACTOR SHALL COMPLY WITH SECTION 5-1.02A OF THE CALTRANS STANDARDS, CHAPTER 9 OF THE STATE OF CALIFORNIA LABOR CODE, AND ANY LOCAL CODES OR ORDINANCES.

21. WE CALL YOUR ATTENTION TO TITLE 8 CALIFORNIA ADMINISTRATION CODE SECTION 1540 (A) (1) OF THE CONSTRUCTION SAFETY ORDERS ISSUED BY THE OCCUPATIONAL SAFETY AND HEALTH STANDARDS BOARD PURSUANT TO THE CALIFORNIA OCCUPATIONS SAFETY AND HEALTH ACT OF 1973 AS AMENDED WHICH STATES:
(1) PRIOR TO OPENING AN EXCAVATION EFFORT SHALL BE MADE TO DETERMINE WHETHER UNDERGROUND INSTALLATIONS; I.E. SEWER, WATER, FUEL, ELECTRICAL LINES, ETC., WILL BE ENCOUNTERED AND IF SO, WHERE SUCH UNDERGROUND INSTALLATIONS ARE LOCATED. WHEN THE EXCAVATION APPROACHES THE APPROXIMATE LOCATION OF SUCH INSTALLATION, THE EXACT LOCATION SHALL BE DETERMINED BY CAREFUL PROBING OR HAND DIGGING; AND, WHEN IT IS UNCOVERED, ADEQUATE PROTECTION SHALL BE PROVIDED FOR THE EXISTING INSTALLATION. ALL KNOWN OWNERS OF UNDERGROUND FACILITIES IN THE AREA CONCERNED SHALL BE ADVISED OF PROPOSED WORK AT LEAST 48 HOURS PRIOR TO THE START OF ACTUAL EXCAVATION.

22. ALL TRENCHES ON MAJOR AND COLLECTOR STREETS AND CROSS TRENCHES ON ALL STREETS SHALL BE PAVED WITH TEMPORARY PAVING THE SAME DAY THE PAVEMENT CUT IS MADE.

23. APPROPRIATE DUST CONTROL SHALL BE PROVIDED, AT THE CONTRACTOR'S EXPENSE TO MINIMIZE ANY DUST NUISANCE AND SHALL BE IN ACCORDANCE WITH SECTION 10 OF CALTRANS STANDARD SPECIFICATIONS AND THE REQUIREMENTS OF THE CITY OF LATHROP.

24. THE CONTRACTOR SHALL SUBMIT TO THE ENGINEER, PRIOR TO FINAL ACCEPTANCE, AS-BUILT DRAWINGS OF ALL IMPROVEMENTS REPRESENTED BY THE PROJECT PLANS AND SPECIFICATIONS.

25. AFTER CONSTRUCTION OF ALL IMPROVEMENTS, THE ENGINEER SHALL SUBMIT ONE SET OF REPRODUCIBLE PLANS. FINAL INVERT ELEVATIONS FOR SEWER AND STORM DRAIN LINES THAT ARE TO BE EXTENDED FOR FUTURE CONSTRUCTION SHALL ALSO BE SHOWN ON THE "AS-BUILT" PLANS ALL AS PROVIDED TO THE ENGINEER BY THE CONTRACTOR.

26. THE CONTRACTOR SHALL NOTIFY M.C.R. ENGINEERING AT LEAST 48 HOURS PRIOR TO BACKFILLNG OF ANY PIPE WHICH STUBS TO A FUTURE PHASE OF CONSTRUCTION FOR INVERT VERIFICATION. TOLERANCE SHALL BE IN ACCORDANCE WITH THE CITY OF LATHROP STANDARD SPECIFICATIONS.

27. CONTRACTOR SHALL PROVIDE CITY WITH A CERTIFICATE SIGNED BY A REGISTERED CIVIL ENGINEER STATING THAT ALL BUILDING PAD ELEVATIONS ARE IN ACCORDANCE WITH THE APPROVED GRADING PLAN.

28. TO COMPLY WITH THE STATE OF CALIFORNIA'S STATE WIDE GENERAL NPDES PERMIT, REGULATING DISCHARGES OF STORM WATER ASSOCIATED WITH CONSTRUCTION ACTIVITY FROM SOIL DISTURBANCES OF ONE (1) ACRE OR MORE, A NOTICE OF INTENT (NOI) TO COMPLY WITH THE TERMS OF THE GENERAL PERMIT TO DISCHARGE STORM WATER ASSOCIATED WITH CONSTRUCTION ACTIVITY UST BE FILED AND APPROPRIATE FEE PAID PRIOR TO COMMENCEMENT OF CONSTRUCTION IN ADDITION, AT THE CONCLUSION OF THE PROJECT A NOTICE OF TERMINATION MUST ALSO BE FILED, SUBMIT THE FEE, A NOTICE OF INTENT, AND NOTICE OF TERMINATION TO THE STATE RESOURCES CONTROL BOARD AT THE FOLLOWING ADDRESS.

STATE WATER RESOURCES CONTROL BOARD
DIVISION OF WATER QUALITY
PO BOX 1977
SACRAMENTO, CA 95812-1977
ATTN: STORM WATER PERMITTING SECTION

IF YOU HAVE ANY QUESTIONS CALL WATER QUALITY CONTROL ENGINEER, CALIFORNIA REGIONAL WATER QUALITY CONTROL BOARD AT (916) 255-3028.

29. THE CONTRACTOR SHALL COMPLY WITH THE REQUIREMENTS OF THE STATE WATER RESOURCES CONTROL BOARD (SWRCB) ORDER NO. 2009-0009-DWQ. THE CONTRACTOR SHALL IMPLEMENT AND MONITOR A STORM WATER POLLUTION PREVENTION PLAN (SWPPP) IN ACCORDANCE WITH THE SWRCB REGULATIONS. CONTRACTOR SHALL IMPLEMENT AND MONITOR THE SWPPP AND AMEND AS NECESSARY.

30. BENCHMARK: G.P.S. STATION NO. 1020

ELEVATION: 15.55 (NAVD 88)

DESCRIPTION: MONUMENT IS LOCATED 13 FEET EAST OF CENTERLINE INTERSECTION OF THOMSEN ROAD AND LISA LANE ON THE CENTERLINE OF THOMSEN ROAD.

STORM DRAIN NOTES:

1. ALL STORM DRAIN CONSTRUCTION AND MATERIALS, SHALL BE IN ACCORDANCE WITH THE REQUIREMENTS OF THE CITY OF LATHROP PUBLIC WORKS DEPARTMENT STANDARD PLANS AND SPECIFICATIONS.

2. THE CONTRACTOR SHALL PROVIDE ALL LIGHTS, SIGNS, BARRICADES, FLAG MEN OR OTHER DEVICES NECESSARY FOR PUBLIC SAFETY.

3. THE CONTRACTOR SHALL PROVIDE ALL SHORING, BRACING, SLOPING OR OTHER PROVISIONS NECESSARY TO PROTECT WORKMAN FOR ALL AREAS TO BE EXCAVATED TO A DEPTH OF 5 FEET OR MORE. SAID PROTECTION TO BE DONE IN ACCORDANCE WITH THE REQUIREMENTS OF THE CITY OF LATHROP DEPARTMENT OF PUBLIC WORKS, AND STATE REGULATIONS.

4. ALL MANHOLE RIMS TO BE ADJUSTED TO FINISH GRADE AFTER STREET PAVING, UNLESS OTHERWISE NOTED. COST FOR RAISING FACILITIES TO BE INCLUDED IN UNIT PRICES FOR MANHOLES.

5. THE CONTRACTOR SHALL EXPOSE ALL EXISTING STORM DRAIN PIPES, WHERE A CONNECTION IS TO BE MADE, AND NOTIFY THE ENGINEER IF THERE IS A DISCREPANCY BETWEEN THE SIGNED PLANS AND THE EXISTING FIELD CONDITION PRIOR TO THE START OF CONSTRUCTION.

6. CONTRACTOR TO BE RESPONSIBLE FOR ALL TESTING OF STORM DRAIN FACILITIES IN ACCORDANCE WITH THE CITY OF LATHROP'S STANDARD SPECIFICATION AND PLANS.

7. ALL STORM DRAIN LINES SHALL BE CLEANED OF ALL SAND AND DEBRIS PRIOR TO ACCEPTANCE BY THE CITY OF LATHROP.

8. INSTALLATION AND CONSTRUCTION RELATIVE TO M.I.D. FACILITIES SHALL BE IN ACCORDANCE WITH M.I.D. STANDARDS AND SPECIFICATIONS.

9. CONTRACTOR SHALL INSTALL A "TRACE WIRE" ON ALL FORCE MAINS. REFER TO CITY STD. W-9 FOR DETAILS.

9. UNLESS OTHERWISE SPECIFIED ON PLANS PIPE WITH DEPTH OF COVER GREATER THAN 10' SHALL BE SDR-26

SANITARY SEWER NOTES:

1. ALL SANITARY SEWER CONSTRUCTION, MATERIALS, AND WORKMANSHIP SHALL BE IN ACCORDANCE WITH THE REQUIREMENTS OF THE CITY OF LATHROP STANDARD SPECIFICATIONS AND PLANS.

2. THE CONTRACTOR SHALL PROVIDE ALL SHORING, BRACING, SLOPING OR OTHER PROVISIONS NECESSARY TO PROTECT WORKMEN FOR ALL AREAS TO BE EXCAVATED TO A DEPTH OF 5' OR MORE. SAID PROTECTION TO BE IN ACCORDANCE WITH THE REQUIREMENTS OF THE CITY OF LATHROP DEPARTMENT OF PUBLIC WORKS, AND STATE REGULATIONS.

3. THE CONTRACTOR SHALL EXPOSE ALL EXISTING SANITARY SEWER PIPES WHERE CONNECTION IS TO BE MADE, SO THAT THE ENGINEER CAN VERIFY EXISTING FLOW LINES AND LOCATIONS BEFORE START OF CONSTRUCTION.

4. THE CONTRACTOR SHALL PROVIDE ALL LIGHTS, SIGNS, BARRICADES, FLAG MEN, OR OTHER DEVICES NECESSARY FOR PUBLIC SAFETY.

5. THE CONTRACTOR SHALL BE RESPONSIBLE FOR ADEQUATELY MARKING INSTALLED LOCATION OF SERVICE LATERALS. THE CONTRACTOR SHALL STAMP AN "S" AT THE BACK OF SIDEWALK DIRECTLY OVER THE SERVICE.

6. ALL SANITARY SEWER LATERALS SHALL BE EXTENDED TO 3' PAST THE PROPERTY LINE (AS DIMENSIONED ON "LOT UTILITY LAYOUT" DETAIL) AND PLUGGED (SEE STD. DWG. S-11).

7. ALL TESTING REQUIRED BY THE CITY SHALL BE THE RESPONSIBILITY OF THE CONTRACTOR, INCLUDING THE TELEVISING OF ALL SEWER LINES.

8. MANHOLE CASTINGS AND COVERS SHALL BE ADJUSTED TO FINISH GRADES BY THE PAVING CONTRACTOR AFTER STREET IMPROVEMENTS ARE COMPLETED COST FOR ADJUSTING FACILITIES TO BE INCLUDED IN THE UNIT PRICE FOR MANHOLES AND CLEANOUTS.

9. CONTRACTOR SHALL INSTALL A "TRACE WIRE" ON ALL FORCE MAINS. REFER TO CITY STD. W-9 FOR DETAILS.

10. UNLESS OTHERWISE SPECIFIED ON PLANS PIPE WITH DEPTH OF COVER GREATER THAN 10' SHALL BE SDR-26

WATER NOTES:

1. ALL WATER CONSTRUCTION, MATERIALS AND WORKMANSHIP SHALL BE IN ACCORDANCE WITH THE REQUIREMENTS OF THE CITY OF LATHROP STANDARD SPECIFICATIONS AND PLANS.

2. ALL HOUSE SERVICES SHALL BE 1" DIAMETER, UNLESS OTHERWISE NOTES. ALL SERVICE LATERALS SHALL BE EXTENDED PAST THE PROPERTY LINE AND CAPPED.

3. CONTRACTOR SHALL EXPOSE EXISTING WATER LINES TO VERIFY EXISTING ELEVATION AND LOCATION PRIOR TO START OF CONSTRUCTION.

4. ALL WATER LINES SHALL BE TESTED AND DISINFECTED IN CONFORMANCE WITH THE REQUIREMENTS OF THE CITY OF LATHROP AND THE AMERICAN WATER WORKS ASSOCIATION (AWWA) STANDARDS, SECTION C-651.
WATER LINE TESTING SHALL INCLUDE:
HYDROSTATIC PRESSURE TESTING PER CITY OF LATHROP STANDARD SPECIFICATION 15-03
BACTERIOLOGICAL TESTING PER CITY OF LATHROP STANDARD SPECIFICATION 15-05 AND AWWA C651.
AFTER FINAL FLUSHING AND BEFORE THE NEW WATER MAIN IS CONNECTED TO THE DISTRIBUTION SYSTEM, TWO CONSECUTIVE SETS OF ACCEPTABLE SAMPLES, TAKEN 24 HOURS APART, SHALL BE COLLECTED FROM THE NEW MAIN. SAMPLES SHALL BE COLLECTED AT SITES AS DIRECTED BY CITY. (AT LEAST ONE SET OF SAMPLES SHALL BE COLLECTED EVERY 1200 FEET OF THE NEW WATER MAIN, PLUS ONE SET FROM EACH END OF THE LINE AND AT LEAST ONE SET FROM EACH BRANCH).
ALL SAMPLES SHALL BE TESTED FOR BACTERIOLOGICAL QUALITY, AND SHALL SHOW THE ABSENCE OF COLOFORM ORGANISMS. A STANDARD HETEROTROPHIC PLATE COUNT MAY BE REQUIRED AT THE OPTION OF THE CITY ENGINEER.
SAMPLES SHALL BE TAKEN FROM WATER THAT HAS STOOD IN THE NEW MAIN FOR AT LEAST 16 HOURS AFTER FINAL FLUSHING HAS BEEN COMPLETED.
IF THE INITIAL DISINFECTION FAILS TO PRODUCE SATISFACTORY BACTERIOLOGICAL SAMPLES, THE MAIN SHALL BE REFLUSHED AND RESAMPLED DAILY FROM THE SAME POINT(S) UNTIL TWO CONSECUTIVE SAMPLES ARE NEGATIVE FOR COLOFORM ORGANISMS.
THE CITY OF LATHROP SHALL PAY FOR THE INITIAL BACTERIOLOGICAL TESTS. THE CONTRACTOR SHALL PAY FOR ALL TESTING NECESSITATED BY FAILURE OF THE INITIAL TEST(S).
IF TRENCH WATER HAS ENTERED THE NEW MAIN DURING CONSTRUCTION OR, IF IN THE OPINION OF THE CITY OF LATHROP, EXCESSIVE QUANTITIES OF DIRT OR DEBRIS HAVE ENTERED THE NEW MAIN, BACTERIOLOGICAL SAMPLES SHALL BE TAKEN AT INTERVALS OF APPROXIMATELY 200 FEET AND SHALL BE IDENTIFIED BY LOCATION. THE CONTRACTOR SHALL INSTALL ADDITIONAL WATER SERVICE TAPS AND SAMPLING STATIONS AS REQUIRED. THE CONTRACTOR SHALL ALSO REMOVE SAMPLING STATIONS AND SERVICES UPON SATISFACTORY COMPLETION OF TESTING. THE CONTRACTOR SHALL PAY FOR TESTING OF THE CONTAMINATED AREAS.
CONTRACT PRICE SHALL INCLUDE FULL COMPENSATION FOR FURNISHING ALL LABOR, MATERIALS, TOOLS, EQUIPMENT, AND INCIDENTALS, AND FOR DOING ALL OF THE WORK INVOLVED IN TESTING AND DISINFECT ION OF THE WATER MAINS.

5. CONTRACTOR SHALL PROVIDE ALL LIGHTS, SIGNS, BARRICADES, FLAG MEN, OR OTHER DEVICES NECESSARY FOR PUBLIC SAFETY.

6. CONTRACTOR SHALL BE RESPONSIBLE FOR ADEQUATELY MARKING THE INSTALLED LOCATION OF SERVICE LATERALS. THE CONTRACTOR SHALL STAMP A "W" AT THE BACK OF SIDEWALK DIRECTLY OVER THE SERVICE.

7. WATER LINES SHALL BE A MINIMUM OF 10 FEET OUTSIDE OF PIPE TO OUTSIDE OF PIPE FROM SEWER AND STORM DRAIN MAINS. CROSSINGS SHALL MEET STATE HEALTH STANDARDS.

8. ALL VALVE BOXES TO BE ADJUSTED TO FINISH GRADE AFTER STREET PAVING. COST FOR RAISING FACILITIES TO BE INCLUDED IN UNIT PRICES FOR VALVES.

9. FOR EXCAVATIONS OF FIVE FEET OR MORE, TRENCHES SHALL BE MADE IN CONFORMANCE WITH APPROPRIATE SHORING SYSTEM STANDARDS.

10. ALL CONNECTIONS TO EXISTING CITY FACILITIES SHALL BE MADE IN THE PRESENCE OF THE CITY ENGINEER, OR HIS APPOINTED REPRESENTATIVE.

11. EXISTING WATER SERVICES WHICH SHALL NOT BE USED SHALL BE ABANDONED. FOR WATER SERVICES LESS THAN OR EQUAL TO 2" SERVICE: PULL THE CORP STOP AT THE MAIN AND INSTALL A BRONZE PLUG IN THE SADDLE. FOR WATER SERVICES GREATER THAN 2" SERVICES: PULL THE VALVE AT THE TEE AT THE MAIN AND BLIND FLANGE THE TEE.

GRADING NOTES:

1. EARTHWORK SHALL BE PERFORMED IN ACCORDANCE WITH THE CITY OF LATHROP STANDARDS & F.H.A. STANDARDS. ALL FILL AREAS SHALL BE TESTED AS REQUIRED BY THE CITY OF LATHROP AND F.H.A., AND SHALL BE PAID FOR BY THE CONTRACTOR.

2. THE OWNER SHALL BE RESPONSIBLE FOR COST OF INITIAL TEST FOR MOISTURE DENSITY CURVE. IF THE FIRST TEST FAILS, THE CONTRACTOR SHALL BE RESPONSIBLE FOR COST OF ALL SUBSEQUENT CURVES AND TESTS.

3. EXCESS EARTH GENERATED FROM UNDERGROUND INSTALLATION AND ROADWAY GRADING SHALL BE PLACED AS DIRECTED BY M.C.R. ENGINEERING.

4. THE CONTRACTOR SHALL REVIEW SITE PRIOR TO BIDDING. ALL VEGETATION AND DELETERIOUS MATERIALS SHALL BE REMOVED FROM THE SITE AT THE EXPENSE OF THE CONTRACTOR AND SHALL BE INCLUDED IN THE LUMP SUM CLEARING COST.

5. THE CONTRACTOR SHALL PRESERVE ALL STAKES AND POINTS SET FOR LINES, GRADES OR MEASUREMENT OF THE WORK IN THEIR PROPER PLACES UNTIL AUTHORIZED TO REMOVE THEM BY THE ENGINEER. ALL EXPENSES INCURRED IN REPLACING STAKES THAT HAVE BEEN REMOVED WITHOUT PROPER AUTHORITY SHALL BE PAID FOR BY THE GENERAL CONTRACTOR.

6. ALL EXISTING WELLS AND SEPTIC TANKS SHALL BE REMOVED AND/OR ABANDONED PER THE REQUIREMENTS OF THE SAN JOAQUIN LOCAL HEALTH DISTRICT AND THE CITY OF LATHROP. THIS WORK SHALL BE INCLUDED IN THE LUMP SUM CLEARING COST.

SIGNAL PULL BOXES AND HANDHOLES:

1. PULL BOXES SHALL BE PRE-CAST REINFORCED CONCRETE WITH "TRAFFIC SIGNAL," "SERVICE," OR "SIGNAL INTERCONNECT" STAMPED ON LIDS. HANDHOLES SHALL BE TYPE A.

2. THE BOTTOMS OF PULL BOXES SHALL BE GROUTED. CONTRACTOR'S ATTENTION IS DIRECTED TO SECTION 86-2.06C OF THE STATE STANDARD SPECIFICATIONS.

3. PULL BOXES SHALL BE STATE #5 MINIMUM. LARGER SIZES SHALL BE INSTALLED WHERE REQUIRED BY THE NATIONAL ELECTRICAL CODE OR WHERE SHOWN ON THE PLANS.

ELECTROLIER NOTES:

1. ALL ELECT AND CONDUIT INSTALLATION SHALL BE IN ACCORDANCE WITH THE CITY OF LATHROP STANDARD SPECIFICATIONS AND THE SERVICING UTILITIES' STANDARDS. ALL LIGHTING TO BE LED.

2. ALL STREET LIGHTING SHALL BE CONSTRUCTED BY AND AT A COST TO THE DEVELOPER SUCH THAT OWNERSHIP OF THE STREET LIGHTS ARE TO BE PROVIDED TO THE CITY OF LATHROP.

3. ALL POLES AND ARMS SHALL BE CONTINUOUSLY TAPERED, ROUND IN CROSS SECTION HAVING DIAMETERS AS SHOWN ON THE STANDARD DRAWINGS.

4. ALL DIMENSIONS SHOWN ON THE STANDARD DRAWINGS ARE MINIMUMS AND SHALL BE MAINTAINED.

5. POLES SHALL BE GALVANIZED STEEL TAPERED TUBE AND/OR ALUMINUM EQUAL.

6. TOP OF PULL BOXES AND FOUNDATIONS FOR STANDARDS SHALL BE LEVEL WITH THE BACK OF WALK IN SIDEWALK AREA OR SURROUNDING GRADE IN OTHER AREAS.

7. ALL CONDUIT TO BE USED SHALL BE RIGID METAL OR SCHEDULE 40 P.V.C. AND SHALL BE BURIED TO THE FOLLOWING DEPTH:

A. WITHIN SIDEWALK OR PARKWAY AREA: 2'-0" MINIMUM
B. WITHIN ROADWAY AREA: 3'-0" MINIMUM

8. THE CONTRACTOR SHALL SIZE CONDUCTOR AND CONDUIT ACCORDING TO THE SERVICE REQUIREMENTS; HOWEVER, NO. 8 A.W.G. CONDUCTOR AND 1 1/2" CONDUIT SHALL BE A MINIMUM.

9. THE UNDERGROUND CONDUIT AND ALL METAL PARTS SHALL BE CONTINUOUSLY BONDED AND GROUNDED.

10. MINIMUM RADIUS OF BENDS TO BE 18". ALL BENDS AND/OR OFFSETS SHALL BE MADE WITH FACTORY SECTIONS.

11. ALL SPLICES TO BE APPROVED SOLDERLESS WATER PROOF CONNECTIONS FOR PROPER SIZE.

12. ALL EMPTY CONDUITS SHALL BE CAPPED AND A 1/4" NYLON PULL ROPE PROVIDED INSIDE.

13. UNLESS OTHERWISE APPROVED BY THE CITY ENGINEER, A NO. 3 1/2 PULL BOX (STATE STANDARD ES-8) SHALL BE INSTALLED AT ALL STREET LIGHT STANDARDS. PULL BOXES SHALL BE NOT MORE THAN 250 FEET APART ON LONG RUNS. COVERS TO BE INSCRIBED "STREET LIGHTING".

14. STREET LIGHT CIRCUIT PLAN WILL BE REQUIRED ON "AS BUILT" PLANS.

DEWATERING NOTES:

1. THE CONTRACTOR SHALL FURNISH, INSTALL, OPERATE AND MAINTAIN ALL MACHINERY APPLIANCES, AND EQUIPMENT TO MAINTAIN ALL EXCAVATIONS FREE FROM WATER DURING CONSTRUCTION. THE CONTRACTOR SHALL DISPOSE OF THE WATER SO AS NOT TO CAUSE DAMAGE TO PUBLIC OR PRIVATE PROPERTY, OR TO CAUSE A NUISANCE OR MENACE TO THE PUBLIC OR VIOLATE THE LAW. THE DEWATERING SYSTEM SHALL BE INSTALLED AND OPERATED SO THAT THE GROUNDWATER LEVEL OUTSIDE THE EXCAVATION IS NOT REDUCED TO THE EXTENT WHICH WOULD CAUSE DAMAGE OR ENDANGERED ADJACENT STRUCTURES OR PROPERTY. ALL COST FOR DEWATERING SHALL BE INCLUDED IN THE UNIT PRICE BID FOR ALL PIPE CONSTRUCTION. THE STATIC WATER LEVEL SHALL BE DRAWN DOWN A MINIMUM OF 1 FOOT BELOW THE BOTTOM TO EXCAVATIONS TO MAINTAIN THE UNDISTURBED STATE OF NATURAL SOILS AND ALLOW THE PLACEMENT OF ANY FILL TO THE SPECIFIED DENSITY. THE CONTRACTOR SHALL HAVE ON HAND, PUMPING EQUIPMENT AND MACHINERY IN GOOD WORKING CONDITION FOR EMERGENCIES AND SHALL HAVE WORKMEN AVAILABLE FOR IT'S OPERATION. DEWATERING SYSTEMS SHALL OPERATE CONTINUOUSLY UNTIL BACKFILL HAS BEEN COMPLETED TO 1 FOOT ABOVE THE NORMAL STATIC GROUNDWATER LEVEL.

2. THE CONTRACTOR SHALL CONTROL SURFACE WATER TO PREVENT ENTRY INTO EXCAVATIONS. AT EACH EXCAVATION, A SUFFICIENT NUMBER OF TEMPORARY OBSERVATION WELLS TO CONTINUOUSLY CHECK THE GROUNDWATER LEVEL SHALL BE PROVIDED.

3. SUMPS SHALL BE NO DEEPER THAN 5 FEET AND SHALL BE AT THE LOW POINT OF EXCAVATION. EXCAVATION SHALL BE GRADED TO DRAIN TO THE SUMPS.

4. THE CONTROL OF GROUNDWATER SHALL BE SUCH THAT SOFTENING OF THE BOTTOM OF EXCAVATIONS, OR FORMATION OF "QUICK" CONDITIONS OR "BOILS", DOES NOT OCCUR. DEWATERING SYSTEMS SHALL BE DESIGNED AND OPERATED SO AS TO PREVENT REMOVAL OF THE NATURAL SOILS. THE RELEASE OF GROUNDWATER AT ITS STATIC LEVEL SHALL BE PERFORMED IN SUCH A MANNER AS TO MAINTAIN THE UNDISTURBED STATE OF THE NATURAL FOUNDATIONS SOILS, PREVENT DISTURBANCE OF COMPACTED BACKFILL, AND PREVENT FLOTATION OR MOVEMENT OF STRUCTURES, PIPELINES AND SEWERS. IF AN NPDES (NATIONAL POLLUTANT DISCHARGE ELIMINATION SYSTEM) PERMIT IS REQUIRED FOR DISPOSAL OF WATER FROM CONSTRUCTION DEWATERING ACTIVITIES, IT SHALL BE OBTAINED BY THE CONTRACTOR PRIOR TO ANY DEWATERING ACTIVITIES.

5. ONE HUNDRED PERCENT STANDBY PUMPING CAPACITY SHALL BE AVAILABLE ON SITE AT ALL TIMES AND SHALL BE CONNECTED TO THE DEWATERING SYSTEM PIPING TO PERMIT IMMEDIATE USE. IN ADDITION, STANDBY AUXILIARY EQUIPMENT AND APPLIANCES FOR ALL ORDINARY EMERGENCIES, AND COMPETENT WORKMEN FOR OPERATION AND MAINTENANCE OF ALL DEWATERING EQUIPMENT SHALL BE ON SITE AT ALL TIMES. STANDBY EQUIPMENT SHALL INCLUDE EMERGENCY POWER GENERATION AND AUTOMATIC SWITCH OVER TO THE EMERGENCY GENERATOR WHEN NORMAL POWER FAILS. DEWATERING SYSTEMS SHALL NOT BE SHUT DOWN BETWEEN SHIFTS, ON HOLIDAYS, ON WEEKENDS, OR DURING WORK STOPPAGES.

6. CONTRACTOR SHALL COMPLY WITH SWRCB REQUIREMENTS FOR DISCHARGING WATER FROM ANY DEWATERING OPERATION, INCLUDING OBTAINING ALL NECESSARY PERMITS.

MONUMENT PRESERVATION NOTE

AS REQUIRED BY THE PROFESSIONAL LAND SURVEYORS' ACT (BUSINESS AND PROFESSIONS CODE §§ 8700-8805) SECTION 8771; PRIOR TO THE START OF CONSTRUCTION, ALL SURVEY MONUMENTS, WITHIN THE PROJECT LIMITS THAT HAVE THE POSSIBILITY OF BEING DAMAGED OR DESTROYED DURING CONSTRUCTION, MUST BE LOCATED AND REFERENCED BY A LICENSED LAND SURVEYOR, AND A CORNER RECORD OR RECORD OF SURVEY SHALL BE FILED WITH THE COUNTY SURVEYOR. IF ANY OF THESE SURVEY MONUMENTS ARE DESTROYED, DAMAGED, OR COVERED OVER DURING THE COURSE OF CONSTRUCTION, A NEW MONUMENT AND MONUMENT BOX MUST THEN BE SET IN ITS PLACE, AT THE ORIGINAL LOCATION, BY A LICENSED LAND SURVEYOR, AND ANOTHER CORNER RECORD OR RECORD OF SURVEY FILED WITH THE COUNTY SURVEYOR.

REGISTERED PROFESSIONAL ENGINEER
J. DAN EAVENSON
No. C54088
EXP. 12-31-21
CIVIL
STATE OF CALIFORNIA

Know what's below.
Call before you dig.
811 / 800-227-2600

MCR ENGINEERING
www.mcreng.com
MCR ENGINEERING, INC.
1242 DUPONT COURT
MANTECA , CA 95336
TEL : (209) 239 - 6229
FAX : (209) 239 - 8839

12/4/2020 4:02:47 PM

LDA
DESIGNERS & ARCHITECTS

Architect:
LDA Partners, Inc.
Designers & Architects
222 Central Court
Stockton, CA 95204
209.943.0405
www.ldapartners.com

LICENSED ARCHITECT
ERIC WILLIAM WOHLE
C28388
September 2021
STATE OF CALIFORNIA

Client:
LATHROP-MANTECA FIRE PROTECTION DISTRICT
19001 SOMERSTON PARKWAY
LATHROP, CA 95330
209.941.5102

Project:
FIRE STATION 31 UPGRADES

800 J STREET
LATHROP CA 95330

Project No.: 757-01-20
Drawn By: SLS
Checked By: JDE

No.	Description	Date	By

3RD SUBMITTAL - BLDG. DEPT.

12/09/2020

NOTES & SPECIFICATIONS

C1.00

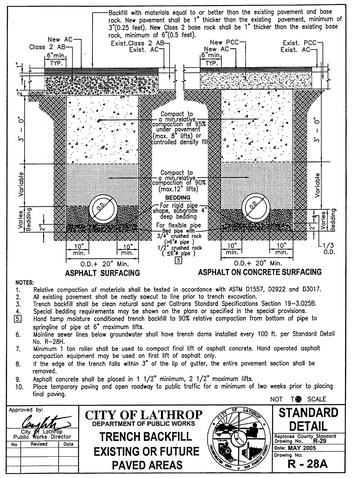

NOTES:
1. Relative compaction of materials shall be tested in accordance with ASTM D1557, D2922 and D3017.
2. All existing pavement shall be neatly sawcut to line prior to trench excavation.
3. Trench backfill shall be clean natural sand per Caltrans Standard Specifications Section 19-3.025B.
4. Special bedding requirements may be shown on the plans or specified in the special provisions.
5. Hand tamp moisture conditioned trench backfill to 90% relative compaction from bottom of pipe to springline of pipe at 6" maximum lifts.
6. Mainline sewer lines below groundwater shall have trench dams installed every 100 ft. per Standard Detail No. R-28H.
7. Minimum 1 ton roller shall be used to compact final lift of asphalt concrete. Hand operated asphalt compaction equipment may be used on first lift of asphalt only.
8. If the edge of the trench falls within 3" of the lip of gutter, the entire pavement section shall be removed.
9. Asphalt concrete shall be placed in 1 1/2" minimum, 2 1/2" maximum lifts.
10. Place temporary paving and open roadway to public traffic for a minimum of two weeks prior to placing final paving.

NOT TO SCALE

Approved by: City of Lathrop Public Works Director

CITY OF LATHROP
DEPARTMENT OF PUBLIC WORKS
TRENCH BACKFILL
EXISTING OR FUTURE
PAVED AREAS

STANDARD DETAIL
Replaces County Standard Drawing No. R-29
Date: MAY 2005
Drawing No: R - 28A

No	Revised	Date

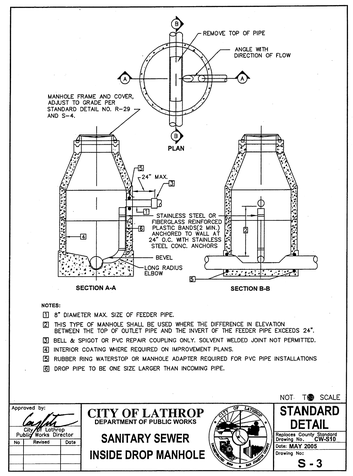

NOTES:
1. 6" DIAMETER MAX. SIZE OF FEEDER PIPE.
2. THIS TYPE OF MANHOLE SHALL BE USED WHERE THE DIFFERENCE IN ELEVATION BETWEEN THE TOP OF OUTLET PIPE AND THE INVERT OF THE FEEDER PIPE EXCEEDS 24".
3. BELL & SPIGOT OR PVC REPAIR COUPLING ONLY. SOLVENT WELDED JOINT NOT PERMITTED.
4. INTERIOR COATING WHERE REQUIRED ON IMPROVEMENT PLANS.
5. RUBBER RING WATERSTOP OR MANHOLE ADAPTER REQUIRED FOR PVC PIPE INSTALLATIONS
6. DROP PIPE TO BE ONE SIZE LARGER THAN INCOMING PIPE.

NOT TO SCALE

Approved by: City of Lathrop Public Works Director

CITY OF LATHROP
DEPARTMENT OF PUBLIC WORKS
SANITARY SEWER
INSIDE DROP MANHOLE

STANDARD DETAIL
Replaces County Standard Drawing No. CW-S10
Date: MAY 2005
Drawing No: S - 3

No	Revised	Date

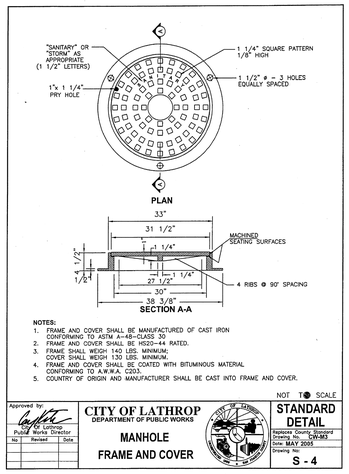

NOTES:
1. FRAME AND COVER SHALL BE MANUFACTURED OF CAST IRON CONFORMING TO ASTM A-48-CLASS 30
2. FRAME AND COVER SHALL BE HS20-44 RATED.
3. FRAME SHALL WEIGH 140 LBS. MINIMUM; COVER SHALL WEIGH 130 LBS. MINIMUM.
4. FRAME AND COVER SHALL BE COATED WITH BITUMINOUS MATERIAL CONFORMING TO A.W.W.A. C203.
5. COUNTRY OF ORIGIN AND MANUFACTURER SHALL BE CAST INTO FRAME AND COVER.

NOT TO SCALE

Approved by: City of Lathrop Public Works Director

CITY OF LATHROP
DEPARTMENT OF PUBLIC WORKS
MANHOLE
FRAME AND COVER

STANDARD DETAIL
Replaces County Standard Drawing No. S-4&5
Date: MAY 2005
Drawing No: S - 4

No	Revised	Date

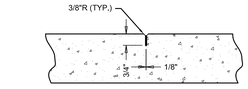

NOTES:
1. MAX SPACING OF WEAKENED PLANE JOINTS ARE 10 FEET IN ANY DIRECTION OR AS SHOWN ON PLANS.

J1 WEAKENED PLAN JOINT
NOT TO SCALE

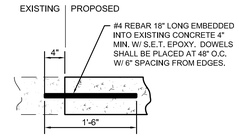

J2 DOWEL INTO EXISTING CONCRETE
NOT TO SCALE

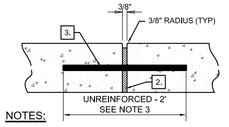

NOTES:
1. CONSTRUCT EXPANSION JOINTS PER AGENCY REQUIREMENTS AT BEGINNING & ENDS OF CURBS, EACH SIDE OF CATCH BASINS, AND OTHER FIXED OBJECTS.
2. PREFORMED FIBER EXPANSION JOINT FILLER CONFORMING TO ASTM D-1751.
3. #4 X 24" STEEL DOWELS TO BE USED AT ALL UNREINFORCED CURB EXPANSION JOINTS. REINFORCED CURB SHALL BE CONTACT LAP SPLICED LENGTH OF (50 X BAR DIAMETER).
4. MAXIMUM SPACING OF EXPANSION JOINTS ARE 80 FEET FOR CURBS AND 100 FEET SQUARE FOR FLATWORK, OR AS SHOWN ON PLANS

J3 CONCRETE CURB EXPANSION JOINT
NOT TO SCALE

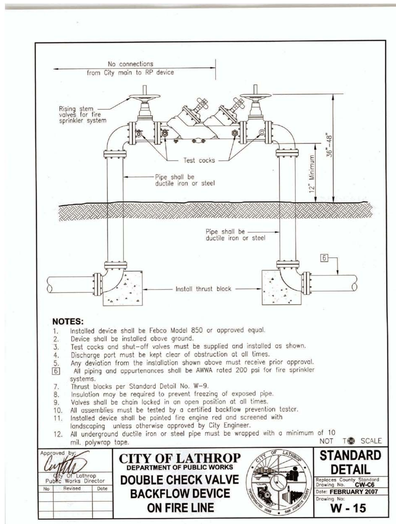

NOTES:
1. Installed device shall be Febco Model 850 or approved equal.
2. Device shall be installed above ground.
3. Test cocks and shut-off valves must be supplied and installed as shown.
4. Discharge port must be kept clear of obstruction at all times.
5. Any deviation from the installation shown above must receive prior approval.
6. All piping and appurtenances shall be AWWA rated 200 psi for fire sprinkler systems.
7. Thrust blocks per Standard Detail No. W-9.
8. Insulation may be required to prevent freezing of exposed pipe.
9. Valves shall be chain locked in an open position at all times.
10. All assemblies must be tested by a certified backflow prevention testor.
11. Installed device shall be painted fire engine red and screened with landscaping unless otherwise approved by City Engineer.
12. All underground ductile iron or steel pipe must be wrapped with a minimum of 10 mil. polywrap tape.

NOT TO SCALE

Approved by: City of Lathrop Public Works Director

CITY OF LATHROP
DEPARTMENT OF PUBLIC WORKS
DOUBLE CHECK VALVE
BACKFLOW DEVICE
ON FIRE LINE

STANDARD DETAIL
Replaces County Standard Drawing No. CW-08
Date: FEBRUARY 2007
Drawing No: W - 15

No	Revised	Date

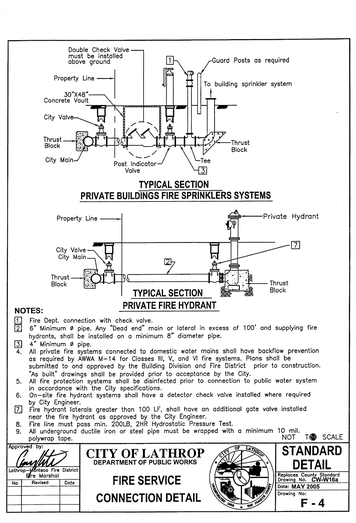

NOTES:
1. Fire Dept. connection with check valve.
2. 6" Minimum ø pipe. Any "Dead end" main or lateral in excess of 100' and supplying fire hydrants, shall be installed on a minimum 8" diameter pipe.
3. 4" Minimum ø pipe.
4. All private fire systems connected to domestic water mains shall have backflow prevention as required by AWWA M-14 for Classes III, V, and VI fire systems. Plans shall be submitted to and approved by the Building Division and Fire District prior to construction. "As built" drawings shall be provided prior to acceptance by the City.
5. All fire protection systems shall be disinfected prior to connection to public water system in accordance with the City specifications.
6. On-site fire hydrant systems shall have a detector check valve installed where required by City Engineer.
7. Fire hydrant laterals greater than 100 LF, shall have an additional gate valve installed near the fire hydrant as approved by the City Engineer.
8. Fire line must pass min. 200LB, 2HR Hydrostatic Pressure Test.
9. All underground ductile iron or steel pipe must be wrapped with a minimum 10 mil. polywrap tape.

NOT TO SCALE

Approved by: Lathrop-Manteca Fire District Fire Marshal

CITY OF LATHROP
DEPARTMENT OF PUBLIC WORKS
FIRE SERVICE
CONNECTION DETAIL

STANDARD DETAIL
Replaces County Standard Drawing No. CW-W16a
Date: MAY 2005
Drawing No: F - 4

No	Revised	Date

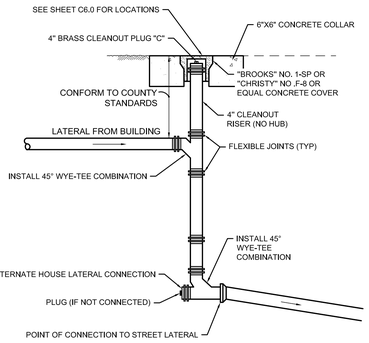

U2 CLEAN-OUT
NOT TO SCALE

THRUST BLOCK DIMENSIONS

FITTINGS	SIDE "A"	SIDE "B"
6" & 8" LINE		
22-1/2 *	2'-0"	1'-6"
45°	3'-0"	2'-0"
90°	3'-6"	3'-0"
TEE	3'-6"	3'-0"
DEAD END	3'-0"	3'-0"

FITTINGS	SIDE "A"	SIDE "B"
10" LINE		
22-1/2 *	2'-6"	2'-0"
45°	3'-0"	3'-0"
90°	4'-0"	4'-0"
TEE	4'-0"	4'-0"
DEAD END	4'-0"	3'-6"

FITTINGS	SIDE "A"	SIDE "B"
12" LINE		
22-1/2 *	3'-0"	2'-0"
45°	4'-0"	3'-0"
90°	5'-0"	4'-5"
TEE	5'-0"	4'-5"
DEAD END	4'-0"	4'-0"

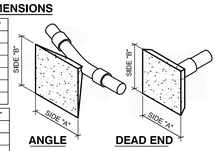

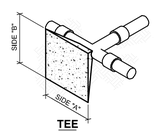

MINIMUM THRUST BLOCK AREAS
(IN SQUARE FEET) *PER NFPA 24

PIPE SIZE	TEE	90 * BEND	45 * BEND	22-1/2 * BEND	DEAD END
4"	3 SF	3 SF	1.5 SF	1 SF	1.5 SF
6"	6 SF	6 SF	3.5 SF	2 SF	3.5 SF
8"	10.5 SF	10.5 SF	5.5 SF	3 SF	5.5 SF
10"	15.5 SF	15.5 SF	8.5 SF	4.5 SF	8.5 SF
12"	22 SF	22 SF	12 SF	6 SF	12 SF

NOTES:
1. AREAS ARE FOR 200 POUNDS PER SQUARE INCH WATER PRESSURE AND SANDY TYPE SOILS.
2. BLOCKING SHALL BE MADE OF CLASS "B" CONCRETE AND SHALL BE PLACED BETWEEN UNDISTURBED GROUND AND THE FITTING TO BE ANCHORED. THE BLOCKING SHALL BE PLACED SO THAT THE JOINTS OF THE PIPE AND FITTINGS WILL BE ACCESSIBLE FOR REPAIR.
3. THRUST BLOCKS SHALL BE CONSTRUCTED AT PIPE DIAMETER CHANGES AND AT OTHER FITTINGS NOT LISTED, AND SHALL BE PLACED AS DIRECTED BY THE ENGINEER.
4. CONCRETE SHALL BE A MINIMUM OF 12" THICK.

U3 THRUST BLOCK SCHEDULE
NOT TO SCALE

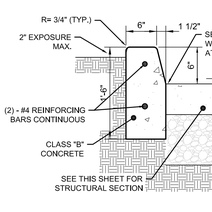

1 VERTICAL CURB
NOT TO SCALE

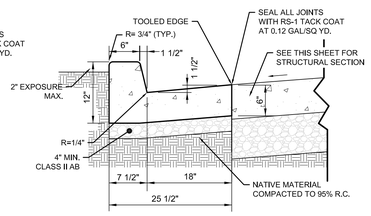

2 CURB & GUTTER
NOT TO SCALE

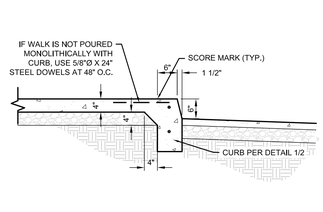

3 CURB & SIDEWALK
NOT TO SCALE

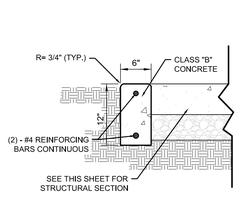

4 FLUSH CURB
NOT TO SCALE

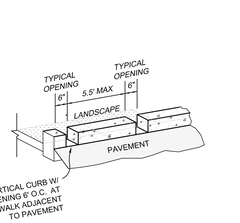

5 CURB OPENING
NOT TO SCALE

LDA DESIGNERS & ARCHITECTS

Architect:
LDA Partners, Inc.
Designers & Architects
222 Central Court
Stockton, CA 95204
209.943.0405
www.ldapartners.com

LICENSED ARCHITECT ERIC WILLIAM WOLF C28388 September 2021 STATE OF CALIFORNIA

Client:
LATHROP-MANTECA FIRE PROTECTION DISTRICT
19001 SOMERSTON PARKWAY
LATHROP, CA 95330
209.941.5102

Project:
FIRE STATION 31 UPGRADES

800 J STREET
LATHROP CA 95330

Project No.: 757-01-20
Drawn By: SLS
Checked By: JDE

No.	Description	Date	By

3RD SUBMITTAL - BLDG. DEPT.

12/09/2020

CONSTRUCTION DETAILS

C2.00

REGISTERED PROFESSIONAL ENGINEER J. DAN EAVENSON No. C54088 EXP. 12-31-21 CIVIL STATE OF CALIFORNIA

811 Know what's below. Call before you dig. 811 / 800-227-2600

MCR ENGINEERING www.mcreng.com
MCR ENGINEERING, INC.
1242 DUPONT COURT
MANTECA, CA 95336
TEL: (209) 239 - 6229
FAX: (209) 239 - 8839

12/4/2020 4:05:47 PM

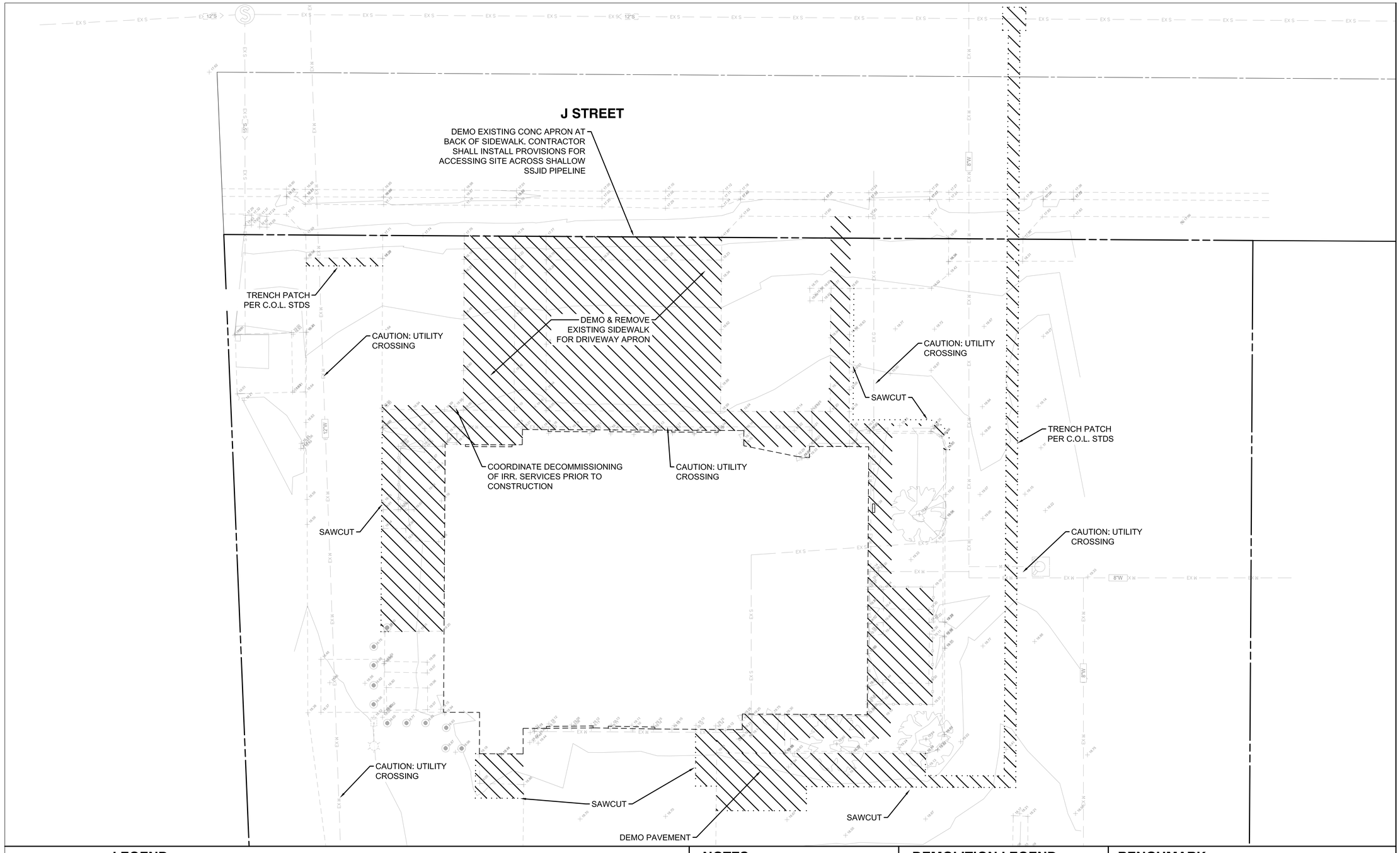

LEGEND

ITEM	EXISTING	ITEM	EXISTING	ITEM	EXISTING
WATER VALVE		WATER LINE	8"W	ORIGINAL GROUND	+23.59
CHECK VALVE, PIV, FDC		SANITARY SEWER	12"SS	CONTOUR (0.5' INTERVAL)	22.00
AIR RELEASE VALVE		STORM DRAIN	12"SD		
BLOWOFF		TYPICAL ELECTROLIER		BARBED WIRE FENCE	
FIRE HYDRANT		TYPICAL LUMINAIRE		WOOD FENCE	
WATER METER	W	ELECTRICAL VAULT / BOX	E	RETAINING WALL	
IRRIGATION BOX	IR	SURVEY MONUMENT		MASONRY WALL	
SEWER MANHOLE	S	UTILITY POLE			
STORM MANHOLE		SIGNAGE			
DRAIN INLET		ELEVATION	23.50TC 23.00P	CURB, GUTTER & SIDEWALK	
CURB INLET		DIRECTION OF FLOW	2.00%		
CLEANOUT					

NOTES

1. THE LOCATION OF EXISTING UTILITIES ARE SHOWN FROM RECORD DRAWINGS & FIELD SURVEY INFORMATION. PRIOR TO CONSTRUCTION THE CONTRACTOR SHALL VERIFY THE LOCATION OF ALL UTILITIES INCLUDING THOSE NOT SHOWN ON THESE PLANS. NOTIFY THE ENGINEER OF ANY DISCEPANCIES OR CONFLICTS AS SOON AS ENCOUNTERED. POT HOLE EXISTING UTILITIES PRIOR TO CONSTRUCTION. CONTRACTOR SHALL COORDINATE WITH DISTRICT STAFF TO DETERMINE IF UTILITIES CAN BE REMOVED OR IF THEY NEED TO BE RE-ROUTED.
2. UNLESS OTHERWISE IDENTIFIED ALL EXISTING FACILITIES SHOWN IN THE TOPOGRAPHIC AND DEMO PLAN ARE TO BE PRESERVED AND PROTECTED DURING CONSTRUCTION. CONTACT DESIGN ENGINEER IF FACILITIES SHOWN TO REMAIN COME IN CONFLICT WITH PROPOSED IMPROVEMENTS.
3. ALL EXISTING UTILITIES WERE PLOTTED FROM RECORD INFORMATION AND FIELD TOPOGRAPHY. ACTUAL LOCATIONS MAY VARY AND ADDITIONAL CROSSINGS MAY EXIST IN THE FIELD. IT IS IMPERATIVE THAT "U.S.A." LOCATION SERVICES ARE LOCATED AND MARKED PRIOR TO START OF EXCAVATION.
4. THE CONTRACTOR SHALL USE EXTREME CAUTION WHEN EXPOSING EXISTING UTILITY CROSSINGS AND SERVICES.
5. ANY DAMAGE TO EXISTING UTILITIES WILL BE SOLE RESPONSIBILITY OF THE CONTRACTOR.
6. ANY DAMAGE TO EXISTING SIDEWALK, CURB OR GUTTER WILL BE SOLE RESPONSIBILITY OF THE CONTRACTOR, WITH REPLACEMENT TO BE DETERMINED BY THE ENGINEER.
7. CONTRACTOR SHALL ADJUST EXISTING MANHOLE RIMS, WATER VALVES, AND MONUMENT BOXES TO FINISH GRADE.
8. ALL SAWCUTS SHALL BE MADE AT EXISTING EXPANSION OR WEAKENED PLANE JOINTS WITH APPROVAL OF THE OWNER

DEMOLITION LEGEND

SAWCUT PAVEMENT:

DEMO & REMOVE EX CONCRETE:

SAWCUT LINE

BENCHMARK

NAME: CITY OF LATHROP BENCHMARK #1020
ELEV.: 15.55

DESCRIPTION: MONUMENT IS LOCATED 13 FEET EAST OF CENTERLINE INTERSECTION OF THOMSEN ROAD AND LISA LANE ON THE CENTERLINE OF THOMSEN ROAD.

DATUM: NAVD 88

0 10

REGISTERED PROFESSIONAL ENGINEER J. DAN EAVENSON No. C54088 EXP. 12-31-21 CIVIL STATE OF CALIFORNIA

811 Know what's below. Call before you dig. 811 / 800-227-2600

MCR ENGINEERING
www.mcreng.com
MCR ENGINEERING, INC.
1242 DUPONT COURT
MANTECA, CA 95336
TEL : (209) 239 - 6229
FAX : (209) 239 - 8839

LDA
DESIGNERS & ARCHITECTS

Architect:
LDA Partners, Inc.
Designers & Architects
222 Central Court
Stockton, CA 95204
209.943.0405
www.ldapartners.com

LICENSED ARCHITECT ERIC WILLIAM WOLFE C28388 September 2021 STATE OF CALIFORNIA

Client:
LATHROP-MANTECA FIRE PROTECTION DISTRICT
19001 SOMERSTON PARKWAY
LATHROP, CA 95330
209.941.5102

Project:
FIRE STATION 31 UPGRADES

800 J STREET
LATHROP CA 95330

Project No.: 757-01-20
Drawn By: SLS
Checked By: JDE

No.	Description	Date	By

3RD SUBMITTAL - BLDG. DEPT.

12/09/2020

TOPOGRAPHIC SURVEY

C3.00

12/9/2020 4:53:41 PM

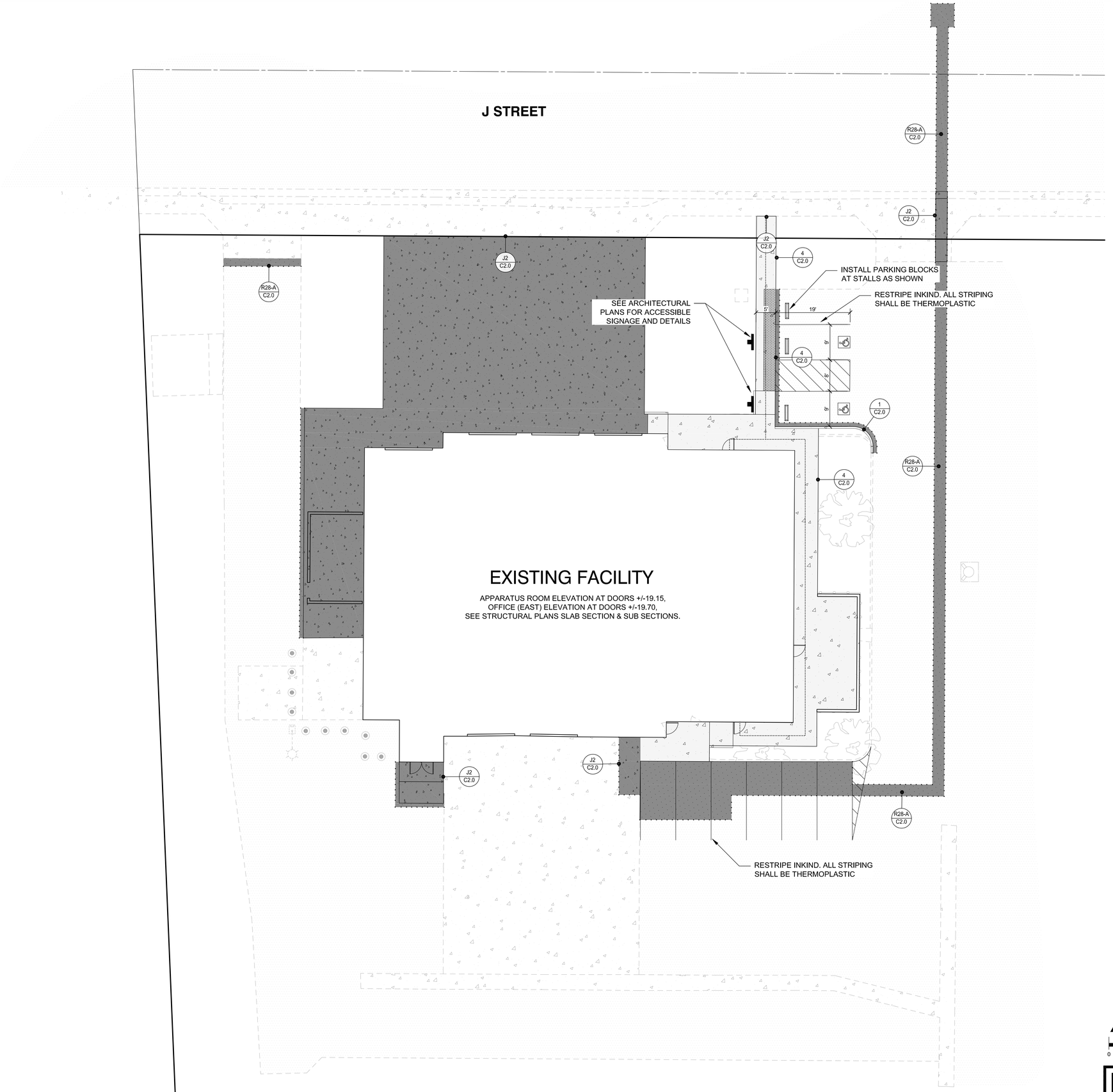

HORIZONTAL CONTROL NOTES:

1. DIMENSION TO FLOWLINE OF CURB UNLESS OTHERWISE NOTED
2. ALL STRIPING AND SIGNAGE SHALL BE INSTALL PER CITY OF LATHROP STANDARDS
3. REFER TO C2.0 FOR CONSTRUCTION DETAILS
4. SEE ARCHITECTURAL DRAWINGS FOR CONCRETE JOINT PATTERNS AND LOCATIONS
5. ALL CURBS ADJACENT TO ENTRANCES TO A PARKING LOT, TRASH ENCLOSURE, PORTE COCHERE, AISLE WITHOUT PARKING, LOADING ZONE, AND EXTERIOR CURB OF ANY INTERIOR PARKING ISLANDS MUST BE PANTED RED WITH WHITE LETTERING DESIGNATING "NO PARKING FIRE LANE" IN ACCORDANCE WITH CFC 503.3.
6. SEE ARCHITECTURAL PLANS FOR ADDITIONAL DIMENSIONS AND CONCRETE DETAILS

PAVEMENT SECTIONS:

HEAVY DUTY (FIRE TRUCK DRIVE):
- 8" PCC (4,000 PSI) OVER 12" A.B. (TI=8.0)
  #4 AT 24" O.C. EACH WAY

STANDARD PAVEMENT (PARKING STALLS):
- 4" A.C. OVER 12" A.B. (TI=5)

CONCRETE: (SIDEWALK)
- 4.0" PCC OVER 4.0" A.B. (TI=4.5)
- 6x6x10 WWM (MAT ONLY)
- (REFER TO GEOTECHNICAL REPORT)

EXISTING PAVEMENT:

A / # DETAIL LETTER / NUMBER SHEET LOCATION

ADA PATH OF TRAVEL

0 10

REGISTERED PROFESSIONAL ENGINEER — JOHN DAN EAVENSON — No. C54088 EXP. 12-31-21 — CIVIL — STATE OF CALIFORNIA

811 Know what's below. Call before you dig. 811 / 800-227-2600

MCR ENGINEERING
www.mcreng.com
MCR ENGINEERING, INC.
1242 DUPONT COURT
MANTECA, CA 95336
TEL: (209) 239 - 6229
FAX: (209) 239 - 8839

LDA DESIGNERS & ARCHITECTS

Architect:
LDA Partners, Inc.
Designers & Architects
222 Central Court
Stockton, CA 95204
209.943.0405
www.ldapartners.com

LICENSED ARCHITECT — ERIC WILLIAM MOATE — C28388 September 2021 — STATE OF CALIFORNIA

Client:
LATHROP-MANTECA FIRE PROTECTION DISTRICT
19001 SOMERSTON PARKWAY
LATHROP, CA 95330
209.941.5102

Project:
FIRE STATION 31 UPGRADES

800 J STREET
LATHROP CA 95330

Project No.: 757-01-20
Drawn By: SLS
Checked By: JDE

No.	Description	Date	By

3RD SUBMITTAL - BLDG. DEPT.

12/09/2020

PAVING PLAN

C4.00

12/4/2020 4:02:47 PM

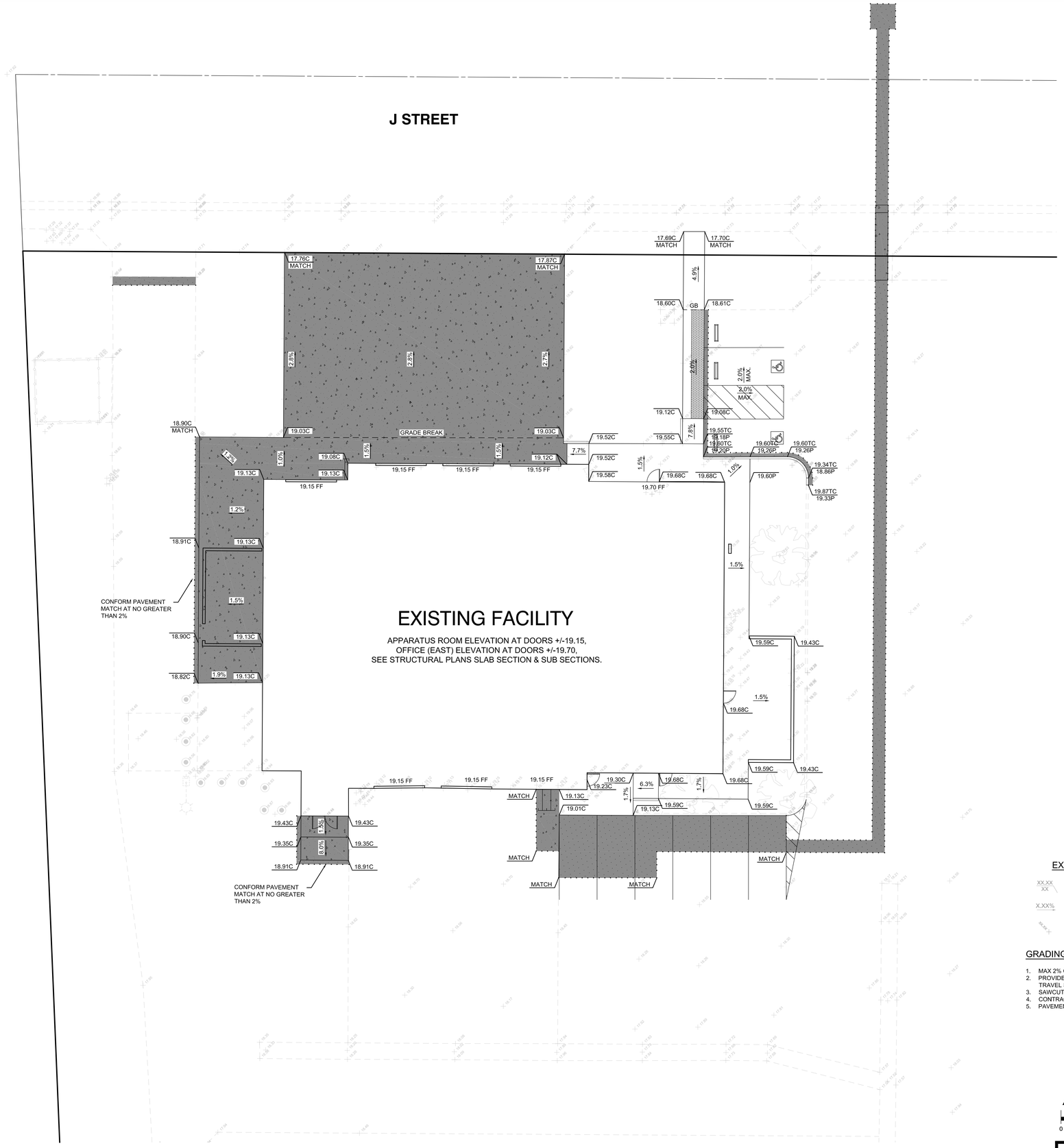

EXISTING FACILITY

APPARATUS ROOM ELEVATION AT DOORS +/-19.15,
OFFICE (EAST) ELEVATION AT DOORS +/-19.70,
SEE STRUCTURAL PLANS SLAB SECTION & SUB SECTIONS.

EXISTING		PROPOSED	
XX.XX / XX	ELEVATION	XX.XX / XX	ELEVATION
X.XX%	SLOPE	X.XX%	SLOPE
XX.XX	EXISTING GROUND	#####	DIRECTION OF FLOWLINE

GRADING NOTES:

1. MAX 2% CROSS SLOPE ACROSS DRIVEWAYS
2. PROVIDE CONCRETE WALK EACH SIDE OF DRIVEWAY AS SHOWN. DIRECTION OF TRAVEL SLOPE SHALL NOT EXCEED 8.33% AND CROSS SLOPE NOT TO EXCEED 2%.
3. SAWCUT AND REMOVE CONCRETE CURBS AND PAVEMENT AS NECESSARY.
4. CONTRACTOR SHALL DOWEL INTO EXISTING DRIVEWAY AT 24" O.C WITH 48" #3 REBAR.
5. PAVEMENT CONFORM TRANSITION NOT TO EXCEED 1:12.

0 10

REGISTERED PROFESSIONAL ENGINEER
J. DAN EAVENSON
No. C54088
EXP. 12-31-21
CIVIL
STATE OF CALIFORNIA

811
Know what's below.
Call before you dig.
811 / 800-227-2600

MCR ENGINEERING
www.mcreng.com
MCR ENGINEERING, INC.
1242 DUPONT COURT
MANTECA, CA 95336
TEL : (209) 239 - 6229
FAX : (209) 239 - 8839

LDA
DESIGNERS & ARCHITECTS

Architect:
LDA Partners, Inc.
Designers & Architects
222 Central Court
Stockton, CA 95204
209.943.0405
www.ldapartners.com

LICENSED ARCHITECT
ERIC WILLIAM MOATE
C28388
September 2021
STATE OF CALIFORNIA

Client:
LATHROP-MANTECA FIRE PROTECTION DISTRICT
19001 SOMERSTON PARKWAY
LATHROP, CA 95330
209.941.5102

Project:
FIRE STATION 31 UPGRADES

800 J STREET
LATHROP CA 95330

Project No.: 757-01-20
Drawn By: SLS
Checked By: JDE

No.	Description	Date	By

3RD SUBMITTAL - BLDG. DEPT.

12/09/2020

GRADING PLAN

C5.00

12/9/2020 4:03:47 PM

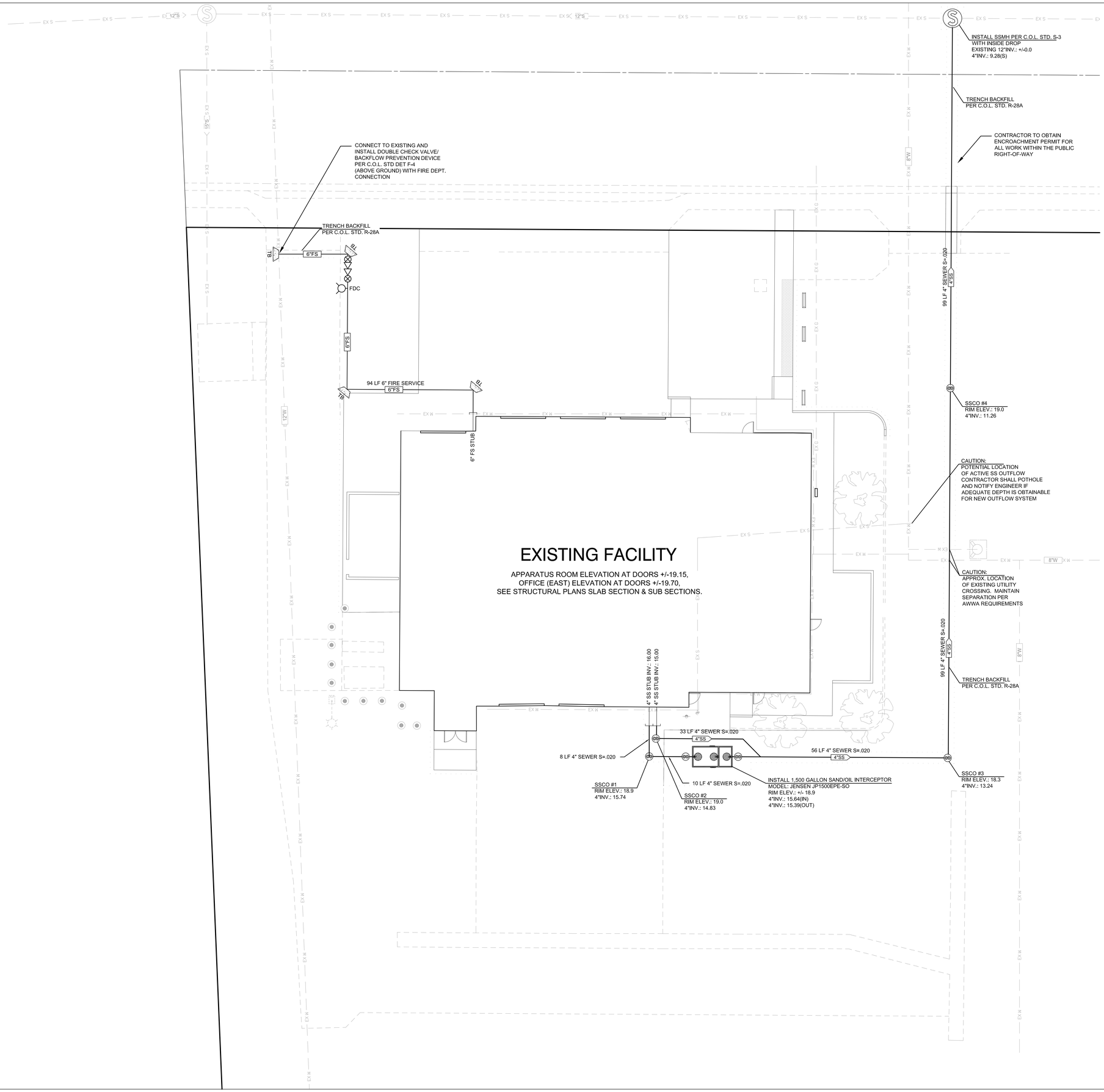

UTILITY NOTES:

1. ALL EXISTING UTILITIES WERE PLOTTED FROM RECORD INFORMATION AND FIELD TOPOGRAPHY. ACTUAL LOCATIONS MAY VARY AND ADDITIONAL CROSSINGS MAY EXIST IN THE FIELD. IT IS IMPERATIVE THAT "U.S.A" LOCATING SERVICES, LOCATE AND MARK UTILITIES PRIOR TO THE START OF EXCAVATION.
2. THE CONTRACTOR SHALL USE EXTREME CAUTION WHEN EXPOSING EXISTING UTILITY CROSSING AND SERVICES.
3. ANY DAMAGE TO EXISTING UTILITIES WILL BE THE SOLE RESPONSIBILITY OF THE CONTRACTOR.
4. ALL STORM DRAIN GRATES SHALL BE ADA COMPLIANT RATED WITH OPENINGS NOT EXCEEDING 1/2" PERPENDICULAR TO THE PATH OF TRAVEL WHEN INSTALLED IN PEDESTRIAN WALKWAY.

0 10

REGISTERED PROFESSIONAL ENGINEER
S. DAN EAVENSON
No. C54088
EXP. 12-31-21
CIVIL
STATE OF CALIFORNIA

811
Know what's below.
Call before you dig.
811 / 800-227-2600

MCR ENGINEERING
www.mcreng.com
MCR ENGINEERING, INC.
1242 DUPONT COURT
MANTECA, CA 95336
TEL: (209) 239 - 6229
FAX: (209) 239 - 8839

LDA DESIGNERS & ARCHITECTS

Architect:
LDA Partners, Inc.
Designers & Architects
222 Central Court
Stockton, CA 95204
209.943.0405
www.ldapartners.com

LICENSED ARCHITECT
ERIC WILLIAM MOALE
C28388
September 2021
STATE OF CALIFORNIA

Client:
LATHROP-MANTECA FIRE PROTECTION DISTRICT
19001 SOMERSTON PARKWAY
LATHROP, CA 95330
209.941.5102

Project:
FIRE STATION 31 UPGRADES

800 J STREET
LATHROP CA 95330

Project No.: 757-01-20
Drawn By: SLS
Checked By: JDE

No.	Description	Date	By

3RD SUBMITTAL - BLDG. DEPT.

12/09/2020

UTILITY PLAN

C6.00

12/4/2020 4:50:47 PM

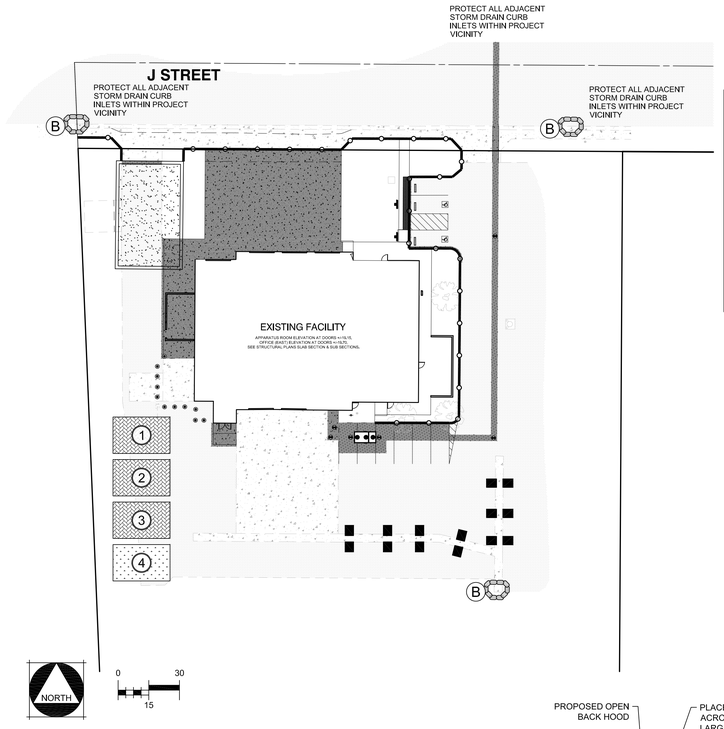

LEGEND

STABILIZED CONSTRUCTION ENTRANCE	EXISTING CURB INLET
	CURB INLET
STRAW ROLLS (SC-5)	CATCH BASIN
FILTER SOCK AT FLOWLINE (25' O.C.)	PROPOSED: CURB INLET SEDIMENT PROTECTION (SC-10, SEE DETAIL A)
1 DESIGNATED AGGREGATE AND CONCRETE RINSE AREA	PROPOSED: DRAIN INLET SEDIMENT PROTECTION (SC-10, SEE DETAIL B)
2 DESIGNATED MAINTENANCE AREA	EXISTING: CURB INLET SEDIMENT PROTECTION (SC-10, SEE DETAIL C)
3 CONSTRUCTION DEBRIS DESIGNATED AREA	GRAVEL BAGS
4 CONTRACTOR LAYDOWN AREA/JOB TRAILER	

STORM DRAIN INLET FILTER BAG

1. GRAVEL BAGS SHALL BE WOVEN GEOTEXTILE FABRIC
2. CONSTRUCT ON GENTLY SLOPING STREETS WHERE WATER CAN POND AND ALLOW SEDIMENT TO SEPARATE OUT OF SUSPENSION.
3. LEAVE A GAP OF ONE BAG IN THE MIDDLE OF THE TOP ROW OF BAGS TO SERVE AS THE SPILLWAY. SPILLWAY HEIGHT SHALL BE LOWER THAN CURB HEIGHT & SUFFICIENT IN SIZE TO PASS FLOWS FROM SEVERE STORM EVENT.
4. PLACE 2 LAYERS OF GRAVEL BAGS OVER LAPPING BAGS AND PACK THEM TIGHTLY TOGETHER TO MINIMIZE THE SPACE BETWEEN BAGS. FILL BAG WITH 1/4" PEA GRAVEL
5. INSPECT & REPAIR FILTERS AFTER EA. STORM EVENT. REMOVE SEDIMENT WHEN 1/2 OF THE FILTER DEPTH HAS BEEN FILLED. REMOVED SEDIMENT SHALL BE DEPOSITED IN AN AREA TRIBUTARY TO A SEDIMENT BASIN OR OTHER FILTERING MEASURE.
6. SEDIMENT & GRAVEL SHALL BE IMMEDIATELY REMOVED FROM TRAVELED WAY OF ROAD.
7. GRAVEL BAG INLET PROTECTION ON ROADS OPEN TO PUBLIC WILL REQUIRE DELINEATION DEVICES TO ALERT MOTORISTS, BICYCLISTS AND PEDESTRIANS. THE USE OF SUCH DEVICES SHALL BE SUBJECT TO THE RESIDENT ENGINEERS APPROVAL.

GENERAL NOTES:

1. EROSION AND SEDIMENT CONTROL MEASURES SHALL BE EFFECTIVE FOR THE DURATION OF THE CONSTRUCTION ACTIVITY.
2. NO STORM RUNOFF WATER SHALL BE ALLOWED TO DRAIN DIRECTLY INTO THE EXISTING UNDERGROUND STORM SYSTEM BEFORE TEH ON-SITE STORM DRAIN SYSTEM, LANDSCAPE, AND PAVING IS INSTALLED AND COMPLETED.
3. AS SOON AS IS PRACTICAL AFTER THE NEW ON-SITE STORM DRAIN SYSTEM IS INSTALLED, THE CATCH BASINS SHALL BE INSTALLED AND GRAVEL BAGS AND SCREENS SHALL BE PLACED AROUND THE CATCH BASINS, AS SHOWN. THE CONTRACTOR SHALL HAVE AN OPTION TO INSTALL PREFABRICATED STEEL FRAMES WITH FILTER SCREEN OF FILTER FABRIC ATTACHED TO THE FRONT OF THE DRAIN INLET AND EXTEND 12 INCHES (12") ON EACH SIDE OF THE DRAIN INLET OPENING. FRAME SHALL BE APPROVED BY THE CITY ENGINEER AND SHALL FIT THE OPENING WITH LESS THAN ONE-QUARTER INCH (1/4") GAP AT ANY ONE POINT.
4. THE NAME, ADDRESS AND 24-HOUR TELEPHONE NUMBER OF THE PERSON RESPONSIBLE FOR IMPLEMENTATION OF THE EROSION AND SEDIMENTATION CONTROL PLAN SHALL BE PROVIDED.
5. A MINIMUM OF 50' OF DRAIN ROCK, 4" TO 6" DIAMETER, AT A MINIMUM DEPTH OF 12", SHALL BE INSTALLED AT EACH DRIVEWAY ENTRANCE TO THE SITE. THIS DOES NOT NEED TO BE DONE AT DRIVEWAYS, WHICH WILL BE CLOSED BY IMMOVABLE BARRICADES DURING CONSTRUCTION.
6. ALL EROSION AND SEDIMENTATION CONTROL MEASURES SHALL BE MAINTAINED UNTIL DISTURBED AREAS ARE STABILIZED. CHANGES TO THE EROSION AND SEDIMENTATION CONTROL PLAN SHALL BE MADE TO MEET FIELD CONDITIONS, BUT ONLY WITH THE APPROVAL OF OR AT THE DIRECTION OF THE CITY ENGINEER.
7. ALL SIDEWALK AND PAVED AREAS SHALL BE KEPT CLEAR OF EARTH MATERIAL AND DEBRIS. THE SITE SHALL BE MAINTAINED SO AS TO MINIMIZE SEDIMENT LADEN RUNOFF FROM ENTERING ANY STORM DRAINAGE SYSTEM.
8. THE EROSION AND SEDIMENTATION CONTROL PLAN COVERS ONLY THE FIRST WINTER DURING WHICH CONSTRUCTION IS TO TAKE PLACE. PLAN AMMENDMENTS SHALL BE PREPARED BY THE PROJECT QSD AS DEAMED NECESSARY.
9. IT IS THE RESPONSIBILITY OF THE CONTRACTOR TO INSPECT AND REPAIR ALL EROSION CONTROL FACILITIES AT THE END OF EACH WORK DAY.
10. IT IS THE RESPONSIBILITY OF THE CONTRACTOR TO CLEAN OUT SEDIMENT BASINS WHENEVER THE LEVEL OF SEDIMENT REACHES THE MANUFACTURERS SEDIMENT CLEAN OUT LEVEL.
11. IT IS THE RESPONSIBILITIES OF THE CONTRACTOR TO PROTECT TEMPORARY BORROW AREAS AND/OR STOCKPILES WITH APPROPRIATE EROSION CONTROL MEASURES.
12. THE CLEANING OF PAVED STREETS, DURING AND AT THE COMPLETION OF CONSTRUCTION, SHALL BE PERFORMED WITH MECHANICAL SWEEPERS. THE USE OF WATER TRUCKS TO "WASH DOWN" THE STREET IS PROHIBITED.
13. THE FOLLOWING PLANS ARE ACCURATE FOR EROSION CONTROL PURPOSES ONLY.
14. THE INFORMATION ON THIS PLAN IS INTENDED TO BE USED AS A GUIDELINE FOR THE CONTRACTOR AND SUBCONTRACTORS TO COMPLY WITH THE REQUIREMENTS OF THE STATE WATER RESOURCES CONTROL BOARD. FIELD CONDITIONS MAY NECESSITATE MODIFICATIONS TO THIS PLAN.
15. NO ON-SITE FUELING SHALL TAKE PLACE.
16. ADDITIONAL STABILIZED CONSTRUCTION ENTRANCES MAY BE REQUIRED, OR LOCATIONS MAY BE CHANGED, AS DETERMINED BY PROJECT CONSTRUCTION STAFF.
17. ANY CHANGES TO THE PROJECT SWPPP SHALL BE APPROVED BY THE PROJECT QSD PRIOR TO BEING IMPLEMENTED.

CONCRETE WASTE MANAGEMENT NOTES

CONCRETE SLURRY WASTES

1. PCC AND AC WASTE SHALL NOT BE ALLOWED TO ENTER STORM DRAINS OR WATERCOURSES.
2. PCC AND AC WASTE SHALL BE COLLECTED AND DISPOSED OF IN A TEMPORARY CONCRETE WASHOUT FACILITY.
3. A SIGN SHALL BE INSTALLED ADJACENT TO EACH TEMPORARY CONCRETE WASHOUT FACILITY TO INFORM CONCRETE EQUIPMENT OPERATORS TO UTILIZE THE PROPER FACILITIES.
4. DO NOT ALLOW SLURRY RESIDUE FROM WET CORING OR SAW-CUTTING AC OR PCC TO ENTER STORM DRAINS OR RECEIVING WATERS.
5. VACUUM SLURRY RESIDUE AND DISPOSE IN A TEMPORARY PIT AND ALLOW SLURRY TO DRY. DISPOSE OF DRY SLURRY RESIDUE IN ACCORDANCE WITH BMP WM-5.
6. COLLECT RESIDUE FROM GROOVING AND GRINDING OPERATIONS IN ACCORDANCE WITH STANDARD SPECIFICATIONS SECTION 42-1.02 AND 42-2.02, "CONSTRUCTION."

ON-SITE TEMPORARY CONCRETE WASHOUT FACILITY, TRANSIT TRUCK WASHOUT PROCEDURES

1. TEMPORARY CONCRETE WASHOUT FACILITIES SHALL BE LOCATED A MINIMUM OF 50 FT FROM STORM DRAIN INLETS, OPEN DRAINAGE FACILITIES, AND WATERCOURSES, UNLESS DETERMINED UNFEASIBLE BY THE ENGINEER. EACH FACILITY SHALL BE LOCATED AWAY FROM CONSTRUCTION TRAFFIC OR ACCESS AREAS TO PREVENT DISTURBANCE OR TRACKING.
2. A SIGN SHALL BE INSTALLED ADJACENT TO EACH WASHOUT FACILITY TO INFORM CONCRETE EQUIPMENT OPERATORS TO UTILIZE THE PROPER FACILITIES.
3. TEMPORARY CONCRETE WASHOUT FACILITIES SHALL BE CONSTRUCTED ABOVE GRADE. TEMPORARY CONCRETE WASHOUT FACILITIES SHALL BE CONSTRUCTED AND MAINTAINED IN SUFFICIENT QUANTITY AND SIZE TO CONTAIN ALL LIQUID AND CONCRETE WASTE GENERATED BY WASHOUT OPERATIONS.
4. TEMPORARY WASHOUT FACILITIES SHALL HAVE A TEMPORARY PIT OR BERMED AREAS OF SUFFICIENT VOLUME TO COMPLETELY CONTAIN ALL LIQUID AND WASTE CONCRETE MATERIALS GENERATED DURING WASHOUT PROCEDURES.
5. PERFORM WASHOUT OF CONCRETE TRUCKS IN DESIGNATED AREAS ONLY.
6. ONCE CONCRETE WASTES ARE WASHED INTO THE DESIGNATED AREA AND ALLOWED TO HARDEN, THE CONCRETE SHALL BE BROKEN UP, REMOVED, AND DISPOSED. DISPOSE OF HARDENED CONCRETE ON A REGULAR BASIS.

TEMPORARY CONCRETE WASHOUT FACILITY (TYPE ABOVE GRADE)

1. TEMPORARY CONCRETE WASHOUT FACILITY (TYPE ABOVE GRADE) SHALL BE CONSTRUCTED AS SHOWN ON THE PLANS, WITH A RECOMMENDED MINIMUM LENGTH AND MINIMUM WIDTH OF 10 FEET, BUT WITH SUFFICIENT QUANTITY AND VOLUME TO CONTAIN ALL LIQUID AND CONCRETE WASTE GENERATED BY WASHOUT OPERATIONS. THE LENGTH AND WIDTH OF A FACILITY MAY BE INCREASED, AT THE CONTRACTOR'S EXPENSE, UPON APPROVAL OF THE ENGINEER.
2. PLASTIC LINING MATERIAL SHALL BE A MINIMUM OF 60 ML POLYETHYLENE SHEETING AND SHALL BE FREE OF HOLES, TEARS OR OTHER DEFECTS THAT COMPROMISE THE IMPERMEABILITY OF THE MATERIAL.

REMOVAL OF TEMPORARY CONCRETE WASHOUT FACILITIES

1. WHEN TEMPORARY CONCRETE WASHOUT FACILITIES ARE NO LONGER REQUIRED FOR THE WORK, AS DETERMINED BY THE ENGINEER, THE HARDENED CONCRETE SHALL BE REMOVED AND DISPOSED OF. MATERIALS USED TO CONSTRUCT TEMPORARY CONCRETE WASHOUT FACILITIES SHALL BECOME THE PROPERTY OF THE CONTRACTOR, SHALL BE REMOVED FROM THE SITE OF THE WORK, AND SHALL BE DISPOSED OF.
2. HOLES, DEPRESSIONS OR OTHER GROUND DISTURBANCE CAUSED BY THE REMOVAL OF THE TEMPORARY CONCRETE WASHOUT FACILITIES SHALL BE BACKFILLED AND REPAIRED IN CONFORMANCE WITH THE PROJECT SPECIFICATIONS.
3. THE CONTRACTOR'S WASTE POLLUTION CONTROL MANAGER (WPCM) SHALL MONITOR ON SITE CONCRETE WASTE STORAGE AND DISPOSAL PROCEDURES AT LEAST WEEKLY.
4. THE WPCM SHALL MONITOR CONCRETE WORKING TASKS, SUCH AS SAW CUTTING, CORING, GRINDING AND GROOVING AT LEAST WEEKLY TO ENSURE PROPER METHODS ARE EMPLOYED.
5. TEMPORARY CONCRETE WASHOUT FACILITIES SHALL BE MAINTAINED TO PROVIDE ADEQUATE HOLDING CAPACITY WITH A MINIMUM FREEBOARD OF 4" FOR ABOVE GRADE FACILITIES AND 12" FOR BELOW GRADE FACILITIES. MAINTAINING TEMPORARY CONCRETE WASHOUT FACILITIES SHALL INCLUDE REMOVING AND DISPOSING OF HARDENED CONCRETE AND RETURNING THE FACILITIES TO A FUNCTIONAL CONDITION. HARDENED CONCRETE MATERIALS SHALL BE REMOVED AND DISPOSED OF IN CONFORMANCE WITH THE PROVISIONS IN SECTION 15-3.02, "REMOVAL METHODS", OF THE STANDARD SPECIFICATIONS.
6. EXISTING FACILITIES MUST BE CLEANED, OR NEW FACILITIES MUST BE CONSTRUCTED AND READY FOR USE ONCE THE WASHOUT IS 75% FULL.

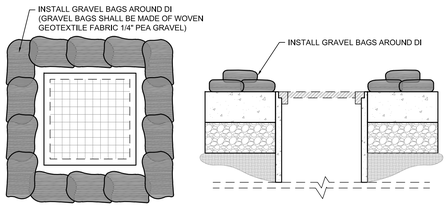

B STORM DRAIN INLET FILTER BAG DETAIL

NOT TO SCALE

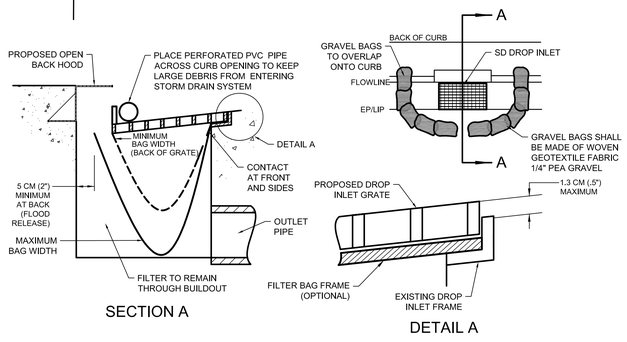

A STORM DRAIN CURB INLET FILTER BAG DETAIL

NOT TO SCALE

STABILIZED CONSTRUCTION ENTRANCE

1. THE MATERIAL FOR CONSTRUCTION OF THE STABILIZED CONSTRUCTION ENTRANCE SHALL BE 4 TO 6 INCH STONE.
2. THE THICKNESS OF THE PAD SHALL NOT BE LESS THAN 12 INCHES.
3. THE WIDTH OF THE PAD SHALL NOT BE LESS THAN THE FULL WIDTH OF ALL POINTS OF INGRESS OR EGRESS, OR 30' MIN.
4. THE LENGTH OF THE PAD SHALL BE AS REQUIRED, BUT NOT LESS THAN 50 FEET.
5. THE ENTRANCE SHALL BE MAINTAINED IN A CONDITION THAT WILL PREVENT TRACKING OR FLOWING OF SEDIMENT ONTO PUBLIC RIGHT-OF-WAY. THIS MAY REQUIRE PERIODIC TOP DRESSING WITH ADDITIONAL STONE AS CONDITIONS DEMAND, AND REPAIR AND/OR CLEAN OUT ANY MEASURES USED TO TRAP SEDIMENT. ALL SEDIMENT SPILLED, DROPPED, WASHED OR TRACKED ONTO PUBLIC RIGHT-OF-WAY SHALL BE REMOVED IMMEDIATELY.
6. WHEN NECESSARY, WHEELS SHALL BE CLEANED TO REMOVE SEDIMENT PRIOR TO ENTRANCE ONTO PUBLIC RIGHT-OF-WAY. WHEN WASHING IS REQUIRED, IT SHALL BE DONE ON AN AREA STABILIZED WITH CRUSHED STONE THAT DRAINS INTO AN APPROVED SEDIMENT TRAP, OR SEDIMENT BASIN. ALL SEDIMENT SHALL BE PREVENTED FROM ENTERING ANY STORM DRAIN, DITCH, OR WATERCOURSE THROUGH USE OF SANDBAGS, GRAVEL, BOARDS, OR OTHER APPROVED METHODS.
7. CONTRACTOR TO REMOVE AND DISPOSE OF STABILIZED CONSTRUCTION ENTRANCE UPON COMPLETION OF CONSTRUCTION.

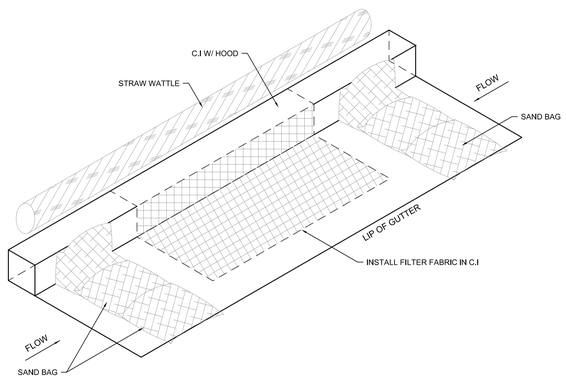

C EXISTING CURB INLET FILTER DETAIL

NOT TO SCALE

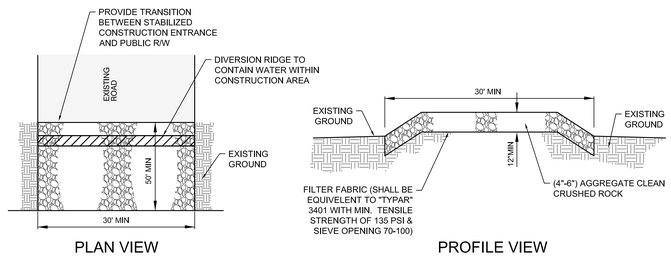

1 STABILIZE CONSTRUCTION ENTRANCE

NOT TO SCALE

Architect:
LDA Partners, Inc.
Designers & Architects
222 Central Court
Stockton, CA 95204
209.943.0405
www.ldapartners.com

LICENSED ARCHITECT ERIC WILLIAM WOLFE C28388 September 2021 STATE OF CALIFORNIA

Client:
LATHROP-MANTECA FIRE PROTECTION DISTRICT
19001 SOMERSTON PARKWAY
LATHROP, CA 95330
209.941.5102

Project:
FIRE STATION 31 UPGRADES

800 J STREET
LATHROP CA 95330

Project No.: 757-01-20
Drawn By: SLS
Checked By: JDE

No.	Description	Date	By

3RD SUBMITTAL - BLDG. DEPT.

12/09/2020

EROSION CONTROL PLAN

C7.00

REGISTERED PROFESSIONAL ENGINEER S. DAN EAVENSON No. C54088 EXP. 12-31-21 CIVIL STATE OF CALIFORNIA

811 Know what's below. Call before you dig. 811 / 800-227-2600

MCR ENGINEERING
www.mcreng.com
MCR ENGINEERING, INC.
1242 DUPONT COURT
MANTECA, CA 95336
TEL: (209) 239 - 6229
FAX: (209) 239 - 8839

12/4/2020 4:02:47 PM

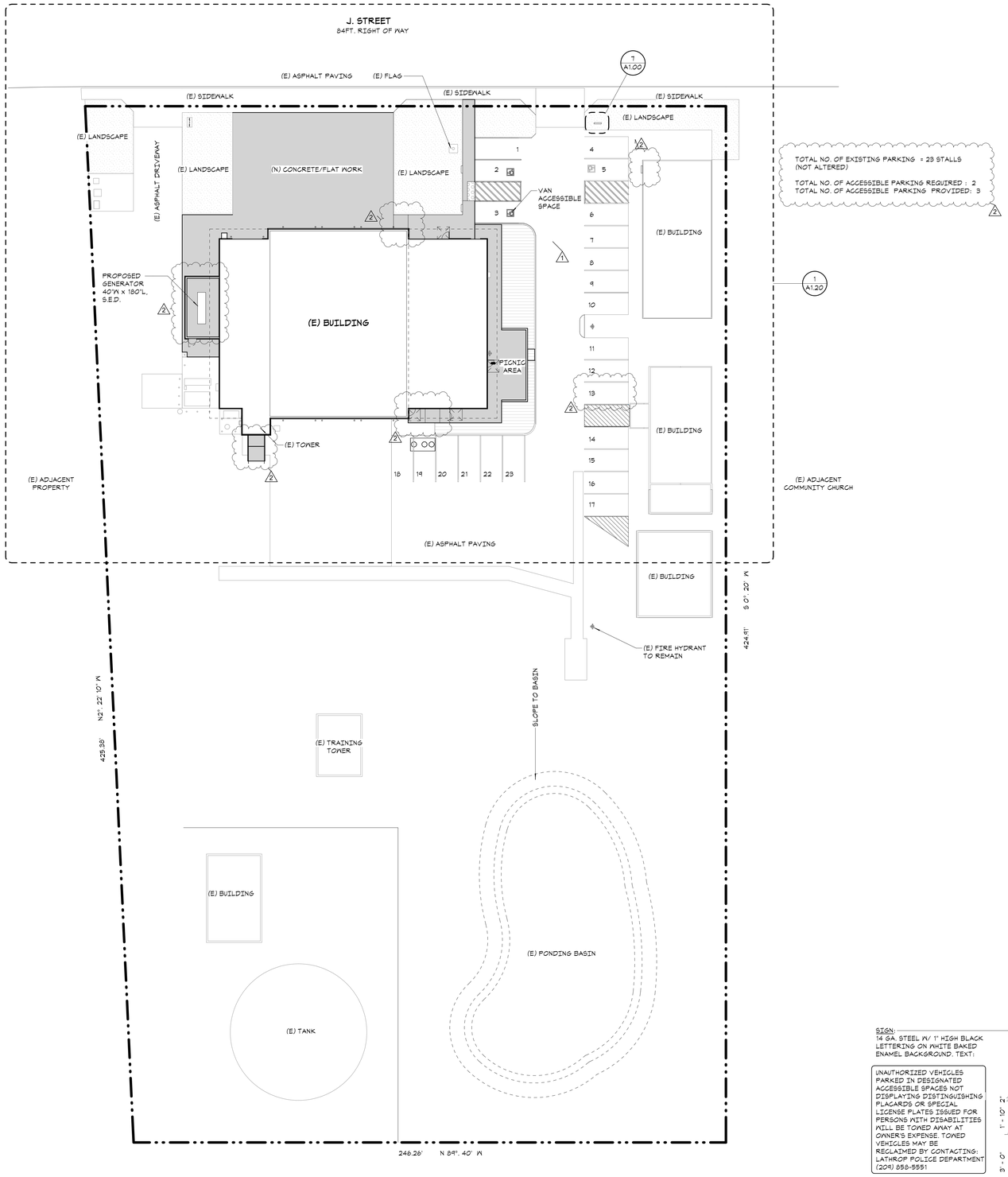

TOTAL NO. OF EXISTING PARKING = 23 STALLS (NOT ALTERED)

TOTAL NO. OF ACCESSIBLE PARKING REQUIRED : 2
TOTAL NO. OF ACCESSIBLE PARKING PROVIDED: 3

1 A1.00 SITE PLAN
1" = 20'-0"

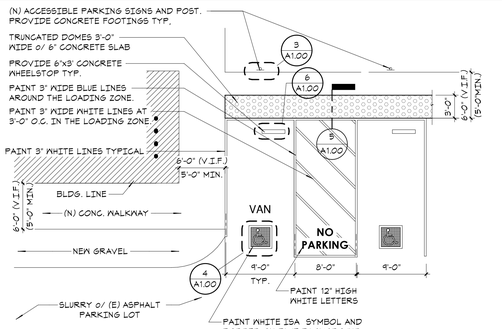

2 A1.00 VAN ACCESSIBLE PARKING STALL
1/8" = 1'-0"

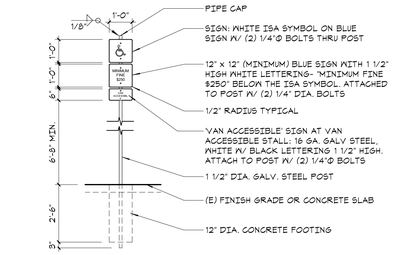

3 A1.00 DISABLED PARKING SPACE SIGN
3/8" = 1'-0"

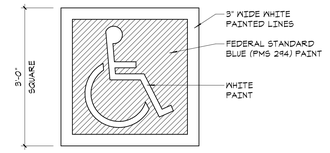

NOTE:
EACH DISABLE PARKING SPACE SHALL HAVE A 3 FOOT SQUARE INTERNATIONAL SYMBOL OF ACCESSIBILITY PAINTED AS SHOWN

4 A1.00 PAINTED ACCESSIBLE SYMBOL
3/4" = 1'-0"

YELLOW 'DURALAST' CAST IN PLACE/ SURFACE APPLIED, NON-SLIP, INLINE DOME TACTILE TILE BY ARMOR TILE (WWW.ARMOR-TILE.COM). INSTALL PER MANUFACTURER'S INSTALLATION INSTRUCTIONS.

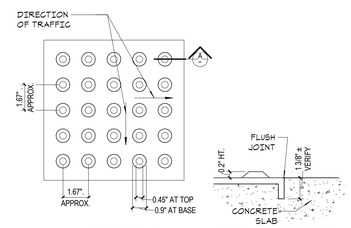

TYPICAL PLAN **CAST IN PLACE SECTION A**

5 A1.00 TRUNCATED DOMES
3" = 1'-0"

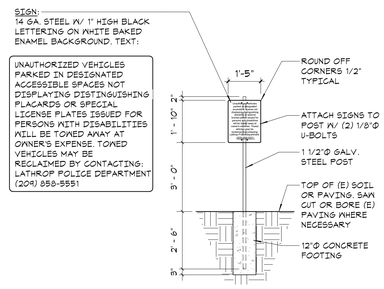

7 A1.00 OFFSTREET TOW-AWAY PARKING SIGN
3/8" = 1'-0"

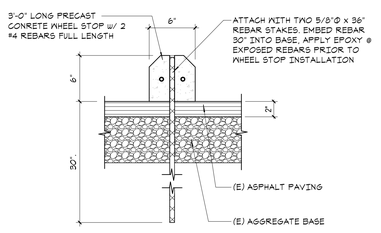

6 A1.00 WHEEL STOP
1 1/2" = 1'-0"

LEGEND

- PROPERTY LINE
- PUBLIC UTILITY EASEMENT
- LANDSCAPE/ TURF
- (E) GRAVEL
- NEW CONCRETE WALK/ FLAT WORK
- ACCESSIBLE PATH OF TRAVEL. FOR ADDITIONAL INFO. REFER TO ACCESSIBILITY STANDARDS SHEET.
- HB (E) HOSE BIBB
- (E) FIRE HYDRANT

GENERAL NOTES

1. VERIFY ALL DIMENSIONS, EXISTING CONDITIONS AND METHODS OF CONSTRUCTION PRIOR TO START OF ANY WORK. NOTIFY ARCHITECT OF ANY DISCREPENCIES.
2. UNLESS OTHERWISE NOTED OR INDICATED, ALL DIMENSIONS SHOWN ARE TO FACE OF FRAMING, CONC. SLAB AND/OR CMU.
3. CONTRACTOR SHALL WORK TOWARD DIMENSIONS WITH TOLERANCES +/- SHOWN.
4. PATCH AND REPAIR ALL EXISTING ADJACENT SURFACES AFFECTED BY THE IMPROVEMENTS PROPOSED IN THESE CONTRACT DOCUMENTS. RESTORE FINISHES TO THESE AREAS TO MATCH EXISTING.
5. THE PEDESTRIAN PATH OF TRAVEL (P.O.T.) IS INDICATED AS A BARRIER FREE, COMMON ACCESS ROUTE WITHOUT ANY ABRUPT VERTICAL CHANGES EXCEEDING 1/2" BEVELED AT 1:2 MAX. SLOPE, EXCEPT THAT LEVEL CHANGES DO NOT EXCEED 1/4" VERTICAL. THE PATHS SURFACE IS AT LEAST 48" WIDE, SLIP RESISTANT, STABLE, FIRM AND SMOOTH. PASSING SPACES AT LEAST 60"x60" ARE LOCATED NOT MORE THAN 200' APART. PART OF P.O.T. W/ CONTINUOUS GRADIENTS HAVE 60" LEVEL AREAS NOT MORE THAN 400' APART. THE CROSS-SLOPE DOES NOT EXCEED 2% AND THE SLOPES IN THE DIRECTION OF TRAVEL THAT EXCEED 5% ARE CONSTRUCTED AS ACCESSIBLE RAMPS. THE P.O.T. IS FREE OF OVERHEAD OBSTRUCTIONS UP TO 80" MIN. OBJECTS PROJECTING FROM WALLS W/ LEADING EDGES BETWEEN 27" & 80" A.F.F. DO NOT PROTRUDE MORE THAN 4" FROM THE WALL. THE CONTRACTOR SHALL VERIFY THAT ALL BARRIERS IN THE P.O.T. HAVE BEEN OR WILL BE REMOVED UNDER THIS PROJECT AND COMPLIES W/ CBC 11B-402, & 11B-403
6. (WHEN PROVIDED) ALL GATES IN PATH OF TRAVEL MUST COMPLY WITH DOOR REQUIREMENTS. PROVIDE A 24" MIN. STRIKE SIDE CLEARANCE ON THE PULL SIDE AND A SMOOTH SURFACE AT THE BOTTOM 10 INCHES OF THE PUSH SIDE OF GATE. SPECIFY ACCESSIBLE / LEVER HARDWARE.
7. PROVIDE BUILDING ENTRANCE SIGN (INTERNATIONAL SYMBOL OF ACCESSIBILITY) AT ACCESSIBLE PUBLIC ENTRANCE DOOR(S). MINIMUM SIZE REQUIRED IS 8"x8"

LDA DESIGNERS & ARCHITECTS

Architect:
LDA Partners, Inc.
Designers & Architects
222 Central Court
Stockton, CA 95204
209.943.0405
www.ldapartners.com

LICENSED ARCHITECT — E. WILLIAM WONG — C28388 — September 2021 — STATE OF CALIFORNIA

Client:
LATHROP-MANTECA FIRE PROTECTION DISTRICT
19001 SOMERSTON PARKWAY
LATHROP CA 95330
209.941.5102

Project:
LATHROP-MANTECA FIRE DISTRICT - STATION 31
800 J STREET
LATHROP CA 95330

Project No.: 757-01-20
Drawn By: A.C.
Checked By: E.W.

No.	Description	Date	By
1	PLAN CHECK #1 1ST REVIEW CYCLE	10-21-2020	
2	PLAN CHECK #2 ADDENDA # 1	12-9-2020	

3RD SUBMITTAL - BLDG. DEPT.

12/9/2020

SITE PLAN

A1.00

12/9/2020 8:42:31 PM

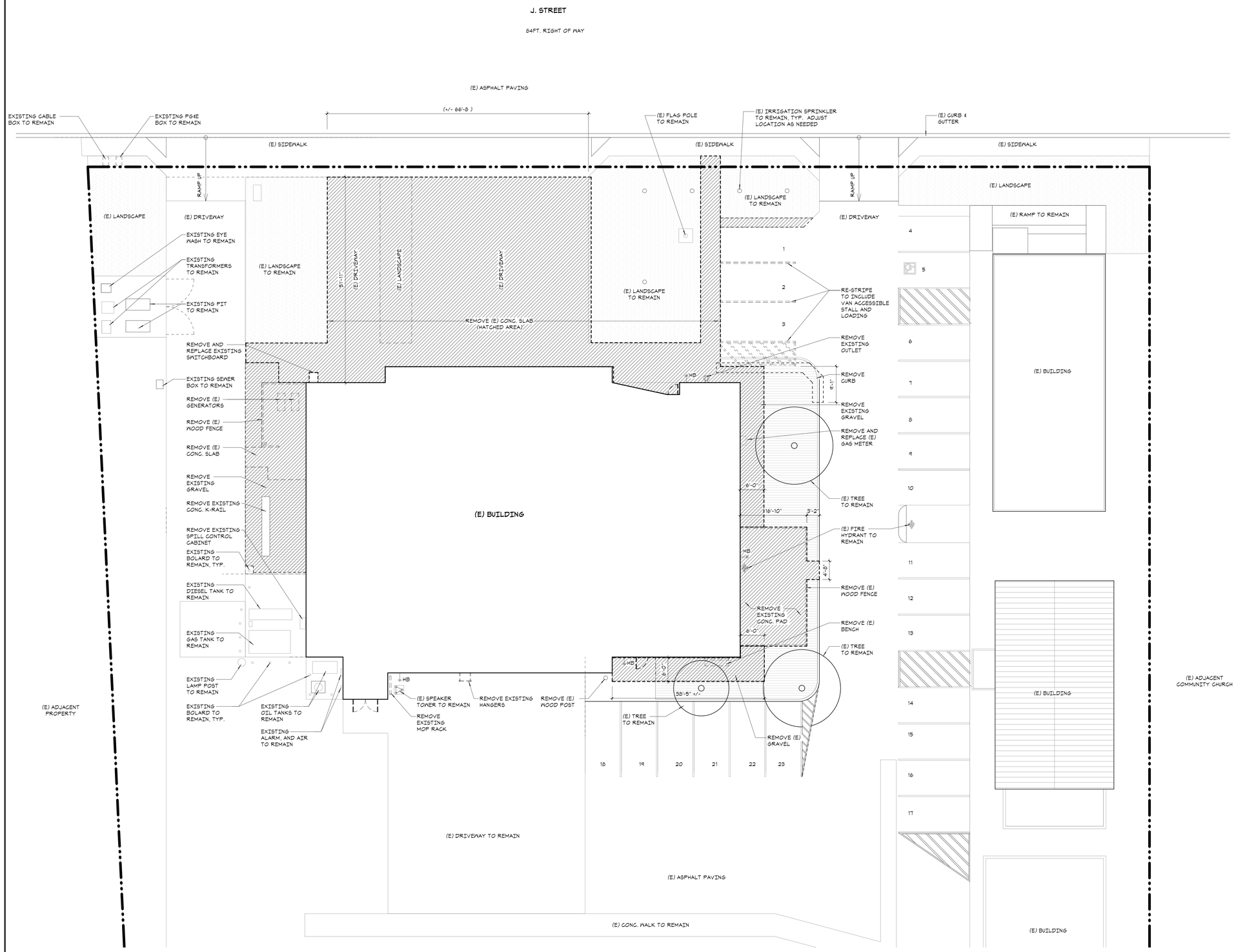

LEGEND

- PROPERTY LINE
- (E) CONC/GRAVEL/LANDSCAPE TO BE REMOVED
- (E) GRAVEL
- (E) LANDSCAPE/GRASS

GENERAL NOTES

1. CONTRACTOR SHALL NOT CUT OR ALTER STRUCTURAL MEMBERS UNLESS INDICATED TO DO SO IN THE CONTRACT DOCUMENTS OR WRITTEN APPROVAL RECEIVED FROM THE ARCHITECT.
2. UNLESS OTHERWISE NOTED ON DRAWINGS, ALL MATERIAL INDICATED TO BE REMOVED SHALL BECOME THE RESPONSIBILITY OF THE CONTRACTOR AND SHALL BE DISPOSED OUTSIDE THE PROJECT SITE.
3. CONTRACTOR TO CUT, CAP, AND REMOVE EXISTING UTILITIES AS SHOWN. IF UTILITIES OTHER THAN THOSE SHOWN ARE ENCOUNTERED, IMMEDIATELY NOTIFY THE ARCHITECT. CEASE OPERATION IN THE IMMEDIATE AREA AND DO NOT DISTURB UNTIL THE ARCHITECT DIRECTS THE DISPOSITION OF SUCH UTILITY.
4. DEMOLITION SHOWN IS DIAGRAMMATIC AND GENERAL. PERFORM ALL DEMOLITION SHOWN AND REQUIRED FOR THE CONSTRUCTION OF THE PROJECT INCLUDING ALL ITEMS IN THE WAY OF NEW WORK WHETHER OR NOT SPECIFICALLY SHOWN.
5. REFER TO MECHANICAL DRAWINGS FOR DEMOLITION RELATIVE TO HVAC SCOPE OF WORK.
6. REFER TO ELECTRICAL DRAWINGS FOR DEMOLITION RELATIVE TO ELECTRICAL SCOPE OF WORK.
7. PATCH AND REPAIR ALL EXISTING WALLS AND FINISHES TO REMAIN.

NOTE:

ALL EXISTING EXTERIOR LIGHT FIXTURES ON THE WALLS, SOFFIT, ETC, AND ELECTRICAL OUTLETS TO BE REMOVED, AND PATCH OR CAP AS NEEDED.

1 / A1.10 DEMOLITION SITE PLAN

1" = 10'-0"

LDA DESIGNERS & ARCHITECTS

Architect:
LDA Partners, Inc.
Designers & Architects
222 Central Court
Stockton, CA 95204
209.943.0405
www.ldapartners.com

LICENSED ARCHITECT — WILLIAM WONG — C28388 — September 2021 — STATE OF CALIFORNIA

Client:
LATHROP-MANTECA FIRE PROTECTION DISTRICT
19001 SOMERSTON PARKWAY
LATHROP CA 95330
209.941.5102

Project:
LATHROP-MANTECA FIRE DISTRICT - STATION 31
800 J STREET
LATHROP CA 95330

Project No.: 757-01-20
Drawn By: A.C.
Checked By: E.W.

No.	Description	Date	By

3RD SUBMITTAL - BLDG. DEPT.

12/9/2020

ENLARGED DEMOLITION SITE PLAN

A1.10

12/9/2020 4:37:31 PM

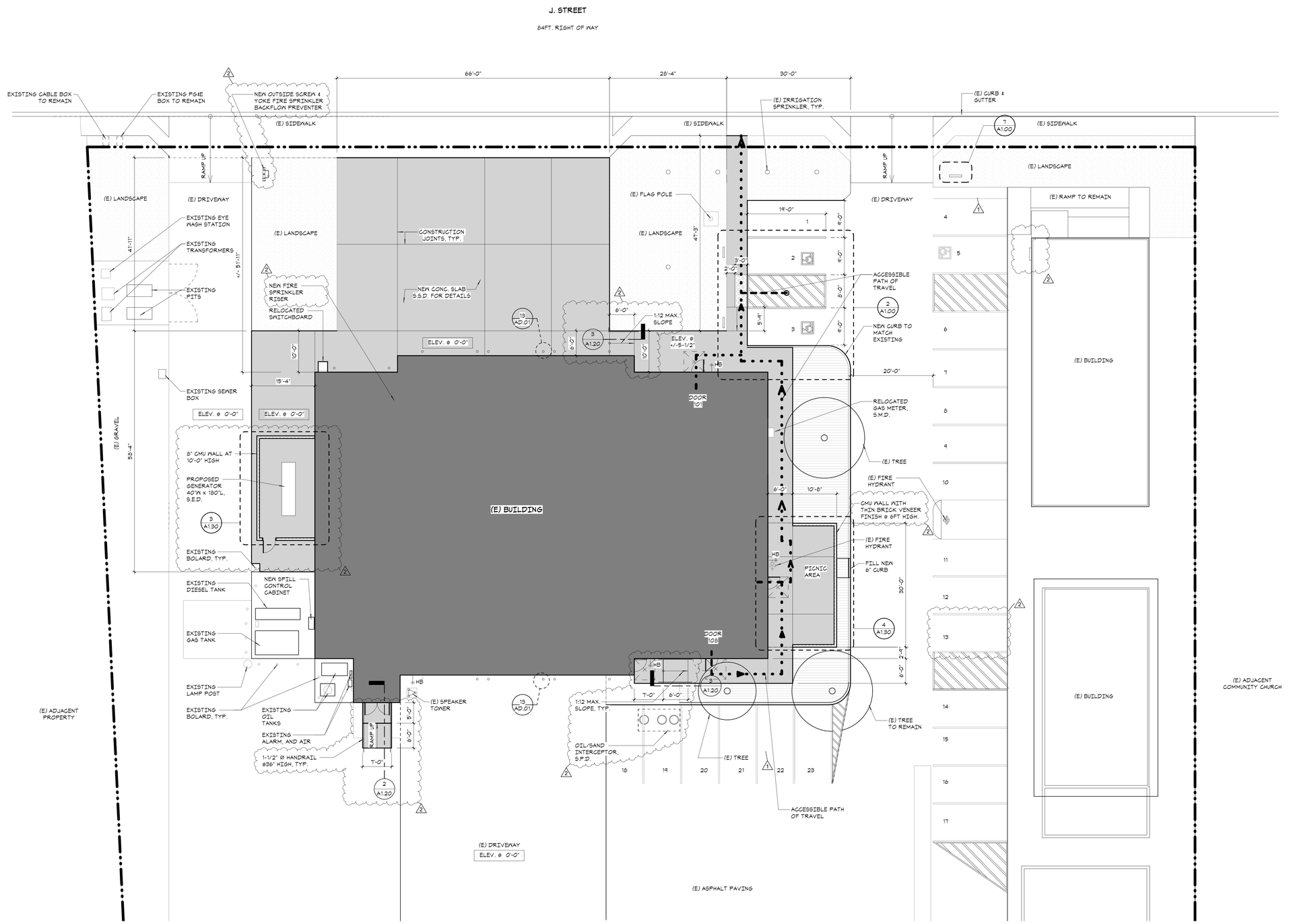

1 A1.20 ENLARGED SITE PLAN
1" = 10'-0"

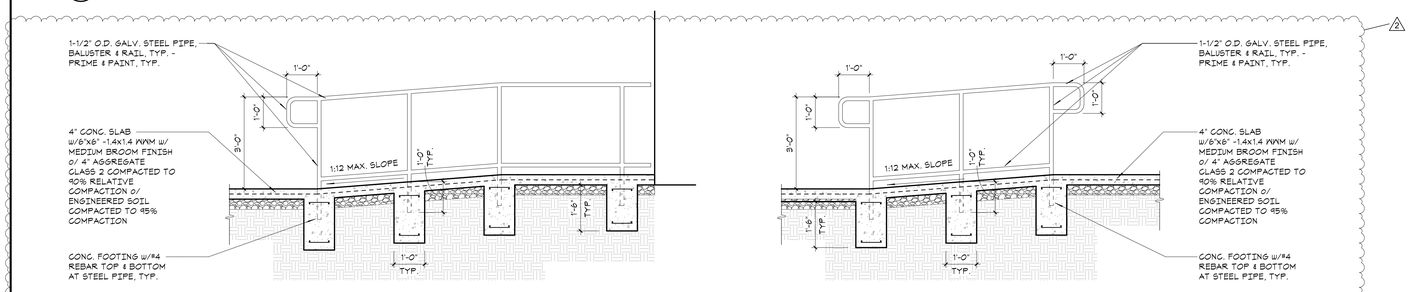

2 A1.20 RAMP HANDRAIL SECTION
1/2" = 1'-0"

3 A1.20 RAMP HANDRAIL SECTION
1/2" = 1'-0"

LEGEND
- PROPERTY LINE
- PUBLIC UTILITY EASEMENT
- LANDSCAPE/ TURF
- (E) GRAVEL
- NEW CONCRETE WALK/ FLAT WORK
- ACCESSIBLE PATH OF TRAVEL. FOR ADDITIONAL INFO, REFER TO ACCESSIBILITY STANDARDS SHEET.
- HB (E) HOSE BIBB
- (E) FIRE HYDRANT

GENERAL NOTES
1. VERIFY ALL DIMENSIONS, EXISTING CONDITIONS AND METHODS OF CONSTRUCTION PRIOR TO START OF ANY WORK. NOTIFY ARCHITECT OF ANY DISCREPENCIES.
2. UNLESS OTHERWISE NOTED OR INDICATED, ALL DIMENSIONS SHOWN ARE TO FACE OF FRAMING, CONC. SLAB AND/OR CMU.
3. CONTRACTOR SHALL WORK TOWARD DIMENSIONS WITH TOLERANCES +/- SHOWN.
4. PATCH AND REPAIR ALL EXISTING ADJACENT SURFACES AFFECTED BY THE IMPROVEMENTS PROPOSED IN THESE CONTRACT DOCUMENTS. RESTORE FINISHED TO THESE AREAS TO MATCH EXISTING.
5. THE PEDESTRIAN PATH OF TRAVEL (P.O.T.) IS INDICATED AS A BARRIER FREE, COMMON ACCESS ROUTE WITHOUT ANY ABRUPT VERTICAL CHANGES EXCEEDING 1/2" BEVELED AT 1:2 MAX. SLOPE, EXCEPT THAT LEVEL CHANGES DO NOT EXCEED 1/4" VERTICAL. THE PATHS SURFACE IS AT LEAST 48" WIDE, SLIP RESISTANT, STABLE, FIRM AND SMOOTH. PASSING SPACES AT LEAST 60"X60" ARE LOCATED NOT MORE THAN 200' APART. PART OF P.O.T. W/ CONTINUOUS GRADIENTS HAVE 80" LEVEL AREAS NOT MORE THAN 400' APART. THE CROSS-SLOPE DOES NOT EXCEED 2% AND THE SLOPES IN THE DIRECTION OF TRAVEL THAT EXCEED 5% ARE CONSTRUCTED AS ACCESSIBLE RAMPS. THE P.O.T. IS FREE OF OVERHEAD OBSTRUCTIONS UP TO 80" MIN. OBJECTS PROJECTING FROM WALLS W/ LEADING EDGES BETWEEN 27" & 80" A.F.F. DO NOT PROTRUDE MORE THAN 4" FROM THE WALL. THE CONTRACTOR SHALL VERIFY THAT ALL BARRIERS IN THE P.O.T. HAVE BEEN OR WILL BE REMOVED UNDER THIS PROJECT AND COMPLIES W/ CBC 11B-402, & 11B-403
6. (WHEN PROVIDED) ALL GATES IN PATH OF TRAVEL MUST COMPLY WITH DOOR REQUIREMENTS. PROVIDE A 24" MIN. STRIKE SIDE CLEARANCE ON THE PULL SIDE AND A SMOOTH SURFACE AT THE BOTTOM 10 INCHES OF THE PUSH SIDE OF GATE. SPECIFY ACCESSIBLE / LEVER HARDWARE.
7. PROVIDE BUILDING ENTRANCE SIGN (INTERNATIONAL SYMBOL OF ACCESSIBILITY) AT ACCESSIBLE PUBLIC ENTRANCE DOOR(S). MINIMUM SIZE REQUIRED IS 6"x6"

LDA DESIGNERS & ARCHITECTS

Architect:
LDA Partners, Inc.
Designers & Architects
222 Central Court
Stockton, CA 95204
209.943.0405
www.ldapartners.com

LICENSED ARCHITECT — ERIC WILLIAM WISE — C28388 — September 2021 — STATE OF CALIFORNIA

Client:
LATHROP-MANTECA FIRE PROTECTION DISTRICT
19001 SOMERSTON PARKWAY
LATHROP CA 95330
209.941.5102

Project:
LATHROP-MANTECA FIRE DISTRICT - STATION 31
800 J STREET
LATHROP CA 95330

Project No.: 757-01-20
Drawn By: AC
Checked By: EW

No.	Description	Date	By
1	PLAN CHECK #1 1ST REVIEW CYCLE	10-21-2020	
2	PLAN CHECK #2 ADDENDA #1	12-9-2020	

3RD SUBMITTAL - BLDG. DEPT.

12/9/2020

ENLARGED SITE PLAN

A1.20

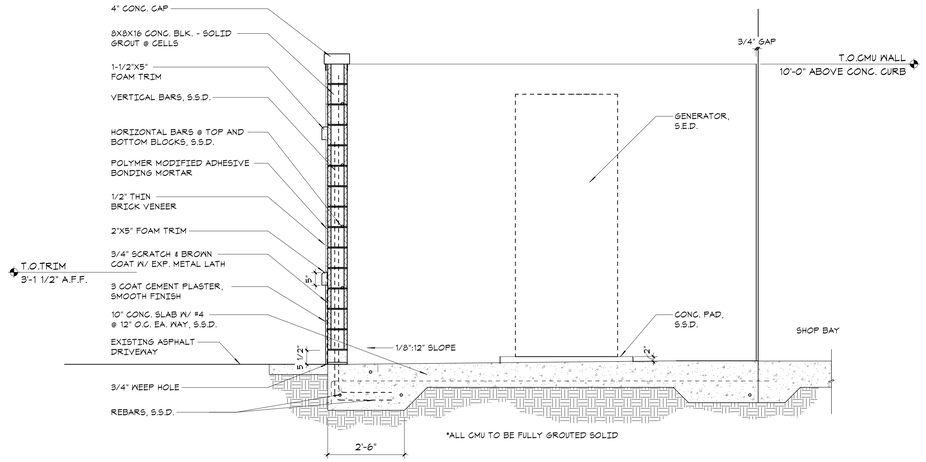

3 A1.30 WALL SECTION (GENERATOR ENCLOSURE)
1/2" = 1'-0"

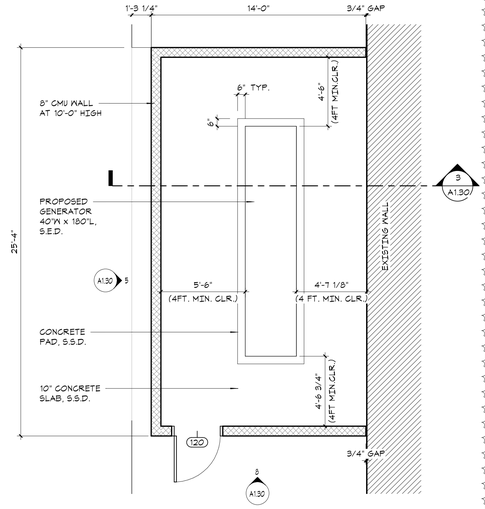

1 A1.30 GENERATOR ENCLOSURE
1/4" = 1'-0"

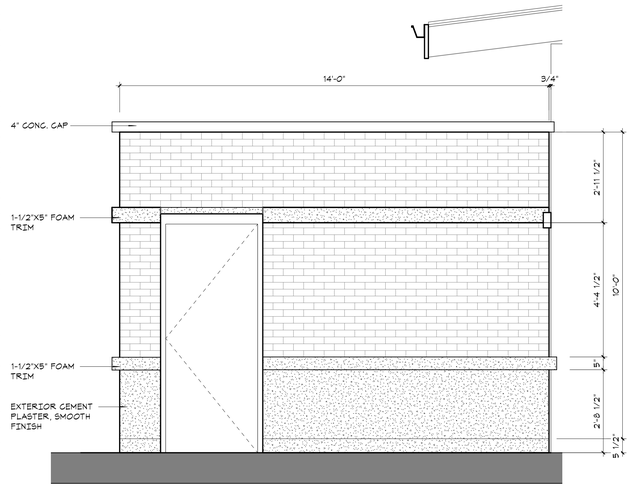

8 A1.30 SOUTH ELEVATION (GENERATOR ENCLOSURE)
1/2" = 1'-0"

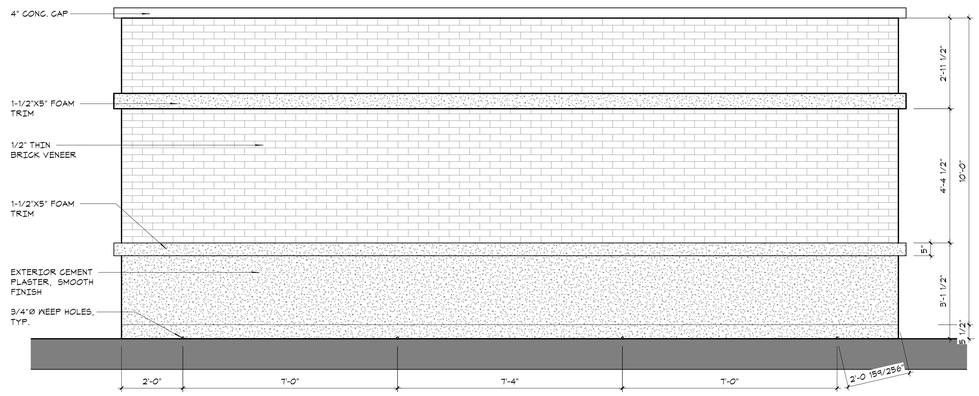

5 A1.30 WEST ELEVATION (GENERATOR ENCLOSURE)
1/2" = 1'-0"

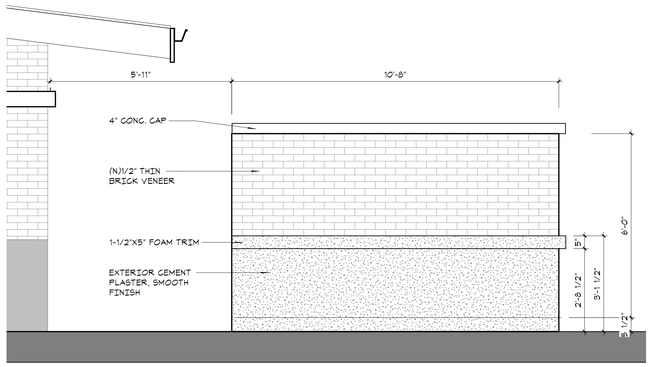

7 A1.30 SOUTH ELEVATION (PICNIC AREA)
1/2" = 1'-0"

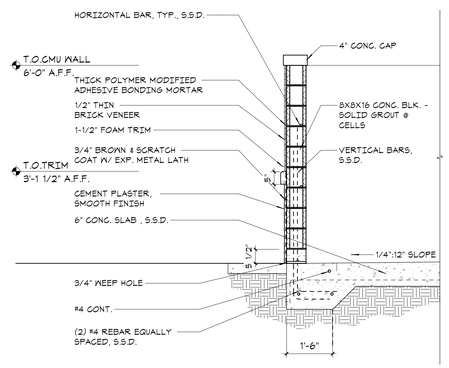

4 A1.30 WALL SECTION (PICNIC ENCLOSURE)
1/2" = 1'-0"

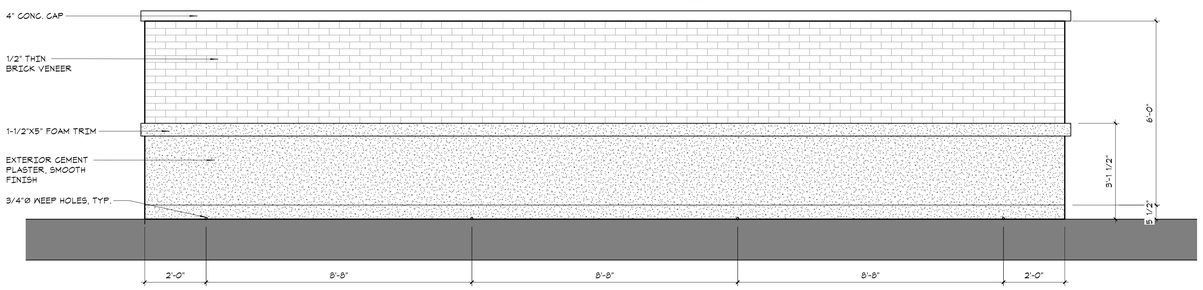

6 A1.30 EAST ELEVATION (PICNIC AREA)
1/2" = 1'-0"

2 A1.30 PICNIC AREA
1/4" = 1'-0"

LDA DESIGNERS & ARCHITECTS

Architect:
LDA Partners, Inc.
Designers & Architects
222 Central Court
Stockton, CA 95204
209.943.0405
www.ldapartners.com

LICENSED ARCHITECT — R. C. WILLIAM WONG — C28388 — September 2021 — STATE OF CALIFORNIA

Client:
LATHROP-MANTECA FIRE PROTECTION DISTRICT
19001 SOMERSTON PARKWAY
LATHROP CA 95330
209.941.5102

Project:
LATHROP-MANTECA FIRE DISTRICT - STATION 31
800 J STREET
LATHROP CA 95330

Project No.: 757-01-20
Drawn By: A.C.
Checked By: E.W.

No.	Description	Date	By
2	PLAN CHECK #2 ADDENDA #1	12-9-2020	

3RD SUBMITTAL - BLDG. DEPT.

12/9/2020

GENERATOR ENCLOSURE, PICNIC AREA ENCLOSURE

A1.30

2

12/9/2020 10:42:18 PM

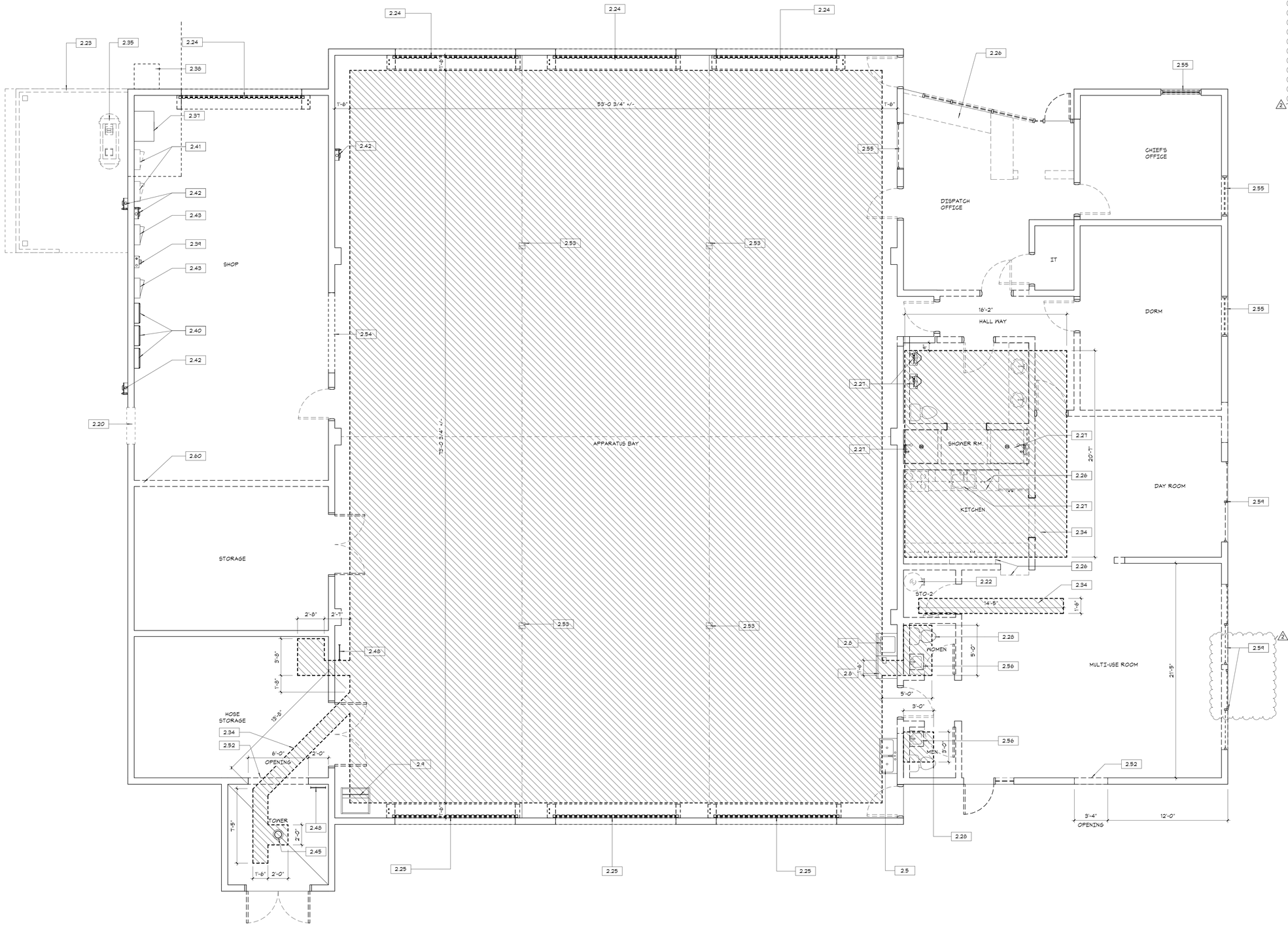

EXISTING/DEMOLITION FLOOR PLAN

1 A2.00 1/4" = 1'-0"

LEGEND

- EXISTING WALL TO REMAIN
- EXISTING WALL TO BE DEMOLISHED
- REMOVE ALL EXISTING DOORS & FRAMES, INCLUDING ALL ROLL-UP DOORS
- DEMOLISH & REMOVE (E) CONCRETE SLAB

GENERAL NOTES

1. CONTRACTOR SHALL NOT CUT OR ALTER STRUCTURAL MEMBERS UNLESS INDICATED TO DO SO IN THE CONTRACT DOCUMENTS OR WRITTEN APPROVAL RECEIVED FROM THE ARCHITECT.
2. UNLESS OTHERWISE NOTED ON DRAWINGS, ALL MATERIAL INDICATED TO BE REMOVED SHALL BECOME THE RESPONSIBILITY OF THE CONTRACTOR AND SHALL BE DISPOSED OUTSIDE THE PROJECT SITE.
3. CONTRACTOR TO CUT, CAP, AND REMOVE EXISTING UTILITIES AS SHOWN. IF UTILITIES OTHER THAN THOSE SHOWN ARE ENCOUNTERED, IMMEDIATELY NOTIFY THE ARCHITECT. CEASE OPERATION IN THE IMMEDIATE AREA AND DO NOT DISTURB UNTIL THE ARCHITECT DIRECTS THE DISPOSITION OF SUCH UTILITY.
4. DEMOLITION SHOWN IS DIAGRAMMATIC AND GENERAL. PERFORM ALL DEMOLITION SHOWN AND REQUIRED FOR THE CONSTRUCTION OF THE PROJECT INCLUDING ALL ITEMS IN THE WAY OF NEW WORK WHETHER OR NOT SPECIFICALLY SHOWN.
5. REFER TO MECHANICAL DRAWINGS FOR DEMOLITION RELATIVE TO HVAC SCOPE OF WORK.
6. REFER TO ELECTRICAL DRAWINGS FOR DEMOLITION RELATIVE TO ELECTRICAL SCOPE OF WORK.
7. PATCH AND REPAIR ALL EXISTING WALLS AND FINISHES TO REMAIN.

KEYNOTES

2.5 REPLACE EXISTING SINK
2.8 EXISTING WASHER AND DRYER TO REMAIN AND REUSE
2.9 EXISTING ICE MAKER TO REMAIN AND REUSE
2.20 REMOVE EXISTING AC UNIT THEN PATCH AND REPAIR EXISTING OPENING
2.22 RELOCATE & RE-USE EXISTING WATER HEATER
2.23 REMOVE EXISTING ROOF STRUCTURE AND WOOD FENCE
2.24 REMOVE AND REPLACE EXISTING ROLL UP DOOR WITH NEW BI-FOLDING (FOUR-FOLD) DOOR, PAINTED TO MATCH EXTERIOR PER FIRE DISTRICT
2.25 REMOVE AND REPLACE EXISTING ROLL UP DOOR WITH NEW DRUM STYLE WITH STANDARD WINDOWS ON ONE SECTION
2.26 DEMOLISH CASEWORK
2.27 DEMOLISH PLUMBING FIXTURES AND TRIM, TYP.
2.28 DEMOLISH WATER CLOSET
2.34 SAW CUT EXISTING CONCRETE SLAB & REMOVE TO EXPOSE PLUMBING LINES
2.35 REMOVE EXISTING AIR COMPRESSOR, S.P.D.
2.37 EXISTING ELECTRICAL SWITCH BOARD TO REMAIN, S.E.D.
2.38 REMOVE AND REPLACE EXISTING ELECTRICAL PULL STATION, S.E.D.
2.39 EXISTING ELECTRICAL METERED PANEL, S.E.D.
2.40 EXISTING PHOTOVOLTAIC DISCONNECT, S.E.D.
2.41 EXISTING ELECTRICAL PANEL TO BE REMOVED, S.E.D.
2.42 EXISTING ELECTRICAL DISCONNECT TO REMAIN, S.E.D.
2.43 EXISTING ELECTRICAL PANEL TO REMAIN, S.E.D.
2.45 REMOVE & REPLACE EXISTING FLOOR DRAIN, S.P.D.
2.48 EXISTING LADDER TO REMAIN
2.52 EXISTING PORTION OF CMU WALL TO BE DEMOLISHED TO 7'-4" A.F.F.
2.53 REMOVE EXISTING ELEC. FLOOR OUTLET
2.54 REMOVE EXISTING ROLL-UP DOOR
2.55 REMOVE & REPLACE EXISTING WINDOW
2.56 DEMOLISH EXISTING LAVATORY
2.59 REMOVE EXISTING SLIDING GLASS DOORS
2.60 REMOVE EXISTING WALL, GRIND FLOOR & PATCH

LDA DESIGNERS & ARCHITECTS

Architect:
LDA Partners, Inc.
Designers & Architects
222 Central Court
Stockton, CA 95204
209.943.0405
www.ldapartners.com

LICENSED ARCHITECT — ROBERT WILLIAM WEBER — C28388 — September 2021 — STATE OF CALIFORNIA

Client:
LATHROP-MANTECA FIRE PROTECTION DISTRICT
19001 SOMERSTON PARKWAY
LATHROP, CA 95330
209.941.5102

Project:
FIRE STATION 31 UPGRADES

800 J STREET
LATHROP CA 95330

Project No.: 757-01-20
Drawn By: AC, RR
Checked By: EW

No.	Description	Date	By
2	PLAN CHECK #2/ADDENDA #1	12-9-2020	

3RD SUBMITTAL - BLDG. DEPT.

12/9/2020

EXISTING/DEMOLITION FLOOR PLAN

A2.00

2020.018 RENO

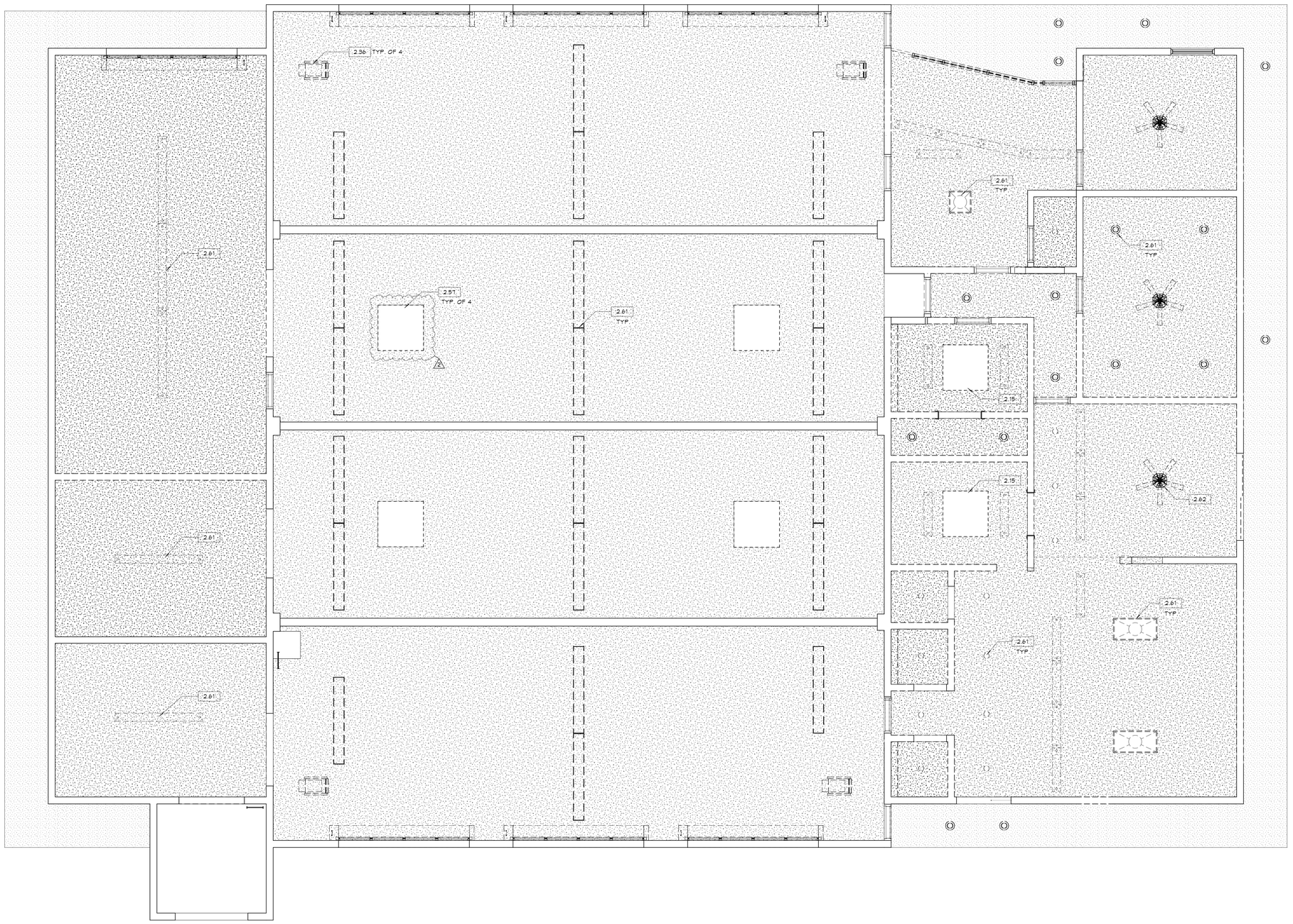

1 A2.01 EXISTING/DEMOLITION REFLECTED CEILING PLAN
1/4" = 1'-0"

LEGEND

- EXISTING TO REMAIN
- EXISTING TO BE DEMOLISHED
- REMOVE (E) GYPSUM BOARD CEILING, AND REPLACE WITH NEW, SEE FINISH SCHED.
- REMOVE (E) PLYWOOD SOFFIT AND REPLACE WITH NEW, SEE FINISH SCHED.
- REMOVE (E) LIGHT FIXTURE, AND REPLACE WITH NEW LED LIGHT FIXTURE, S.E.D.
- REMOVE (E) LIGHT FIXTURE, AND REPLACE WITH NEW LED LIGHT FIXTURE, S.E.D.
- REMOVE (E) LIGHT FIXTURE, AND REPLACE WITH NEW LED LIGHT FIXTURE, S.E.D.

GENERAL NOTES

1. CONTRACTOR SHALL NOT CUT OR ALTER STRUCTURAL MEMBERS UNLESS INDICATED TO DO SO IN THE CONTRACT DOCUMENTS OR WRITTEN APPROVAL RECEIVED FROM THE ARCHITECT.
2. UNLESS OTHERWISE NOTED ON DRAWINGS, ALL MATERIAL INDICATED TO BE REMOVED SHALL BECOME THE RESPONSIBILITY OF THE CONTRACTOR AND SHALL BE DISPOSED OUTSIDE THE PROJECT SITE.
3. CONTRACTOR TO CUT, CAP, AND REMOVE EXISTING UTILITIES AS SHOWN. IF UTILITIES OTHER THAN THOSE SHOWN ARE ENCOUNTERED, IMMEDIATELY NOTIFY THE ARCHITECT, CEASE OPERATION IN THE IMMEDIATE AREA AND DO NOT DISTURB UNTIL THE ARCHITECT DIRECTS THE DISPOSITION OF SUCH UTILITY.
4. DEMOLITION SHOWN IS DIAGRAMMATIC AND GENERAL. PERFORM ALL DEMOLITION SHOWN AND REQUIRED FOR THE CONSTRUCTION OF THE PROJECT INCLUDING ALL ITEMS IN THE WAY OF NEW WORK WHETHER OR NOT SPECIFICALLY SHOWN.
5. REFER TO MECHANICAL DRAWINGS FOR DEMOLITION RELATIVE TO HVAC SCOPE OF WORK.
6. REFER TO ELECTRICAL DRAWINGS FOR DEMOLITION RELATIVE TO ELECTRICAL SCOPE OF WORK.
7. PATCH AND REPAIR ALL EXISTING WALLS AND FINISHES TO REMAIN.

KEYNOTES

2.15 REMOVE EXISTING SKYLIGHT, PATCH & REPAIR ROOFING
2.36 REMOVE EXISTING UNIT HEATER, S.P.D.
2.61 REMOVE EXISTING LIGHT FIXTURE & REPLACE w/ NEW
2.62 REMOVE EXISTING CEILING FAN & REPLACE w/ NEW

LDA
DESIGNERS & ARCHITECTS

Architect:
LDA Partners, Inc.
Designers & Architects
222 Central Court
Stockton, CA 95204
209.943.0405
www.ldapartners.com

LICENSED ARCHITECT
ERIC WILLIAM WOHLER
C28388
September 2021
STATE OF CALIFORNIA

Client:
LATHROP-MANTECA FIRE PROTECTION DISTRICT
19001 SOMERSTON PARKWAY
LATHROP, CA 95330
209.941.5102

Project:
FIRE STATION 31 UPGRADES

800 J STREET
LATHROP CA 95330

Project No.: 757-01-20
Drawn By: Author
Checked By: Checker

No.	Description	Date	By
2	PLAN CHECK #2/ADDENDA #1	12-9-2020	

3RD SUBMITTAL - BLDG. DEPT.

12/9/2020

DEMOLITION REFLECTED CEILING PLAN

A2.01

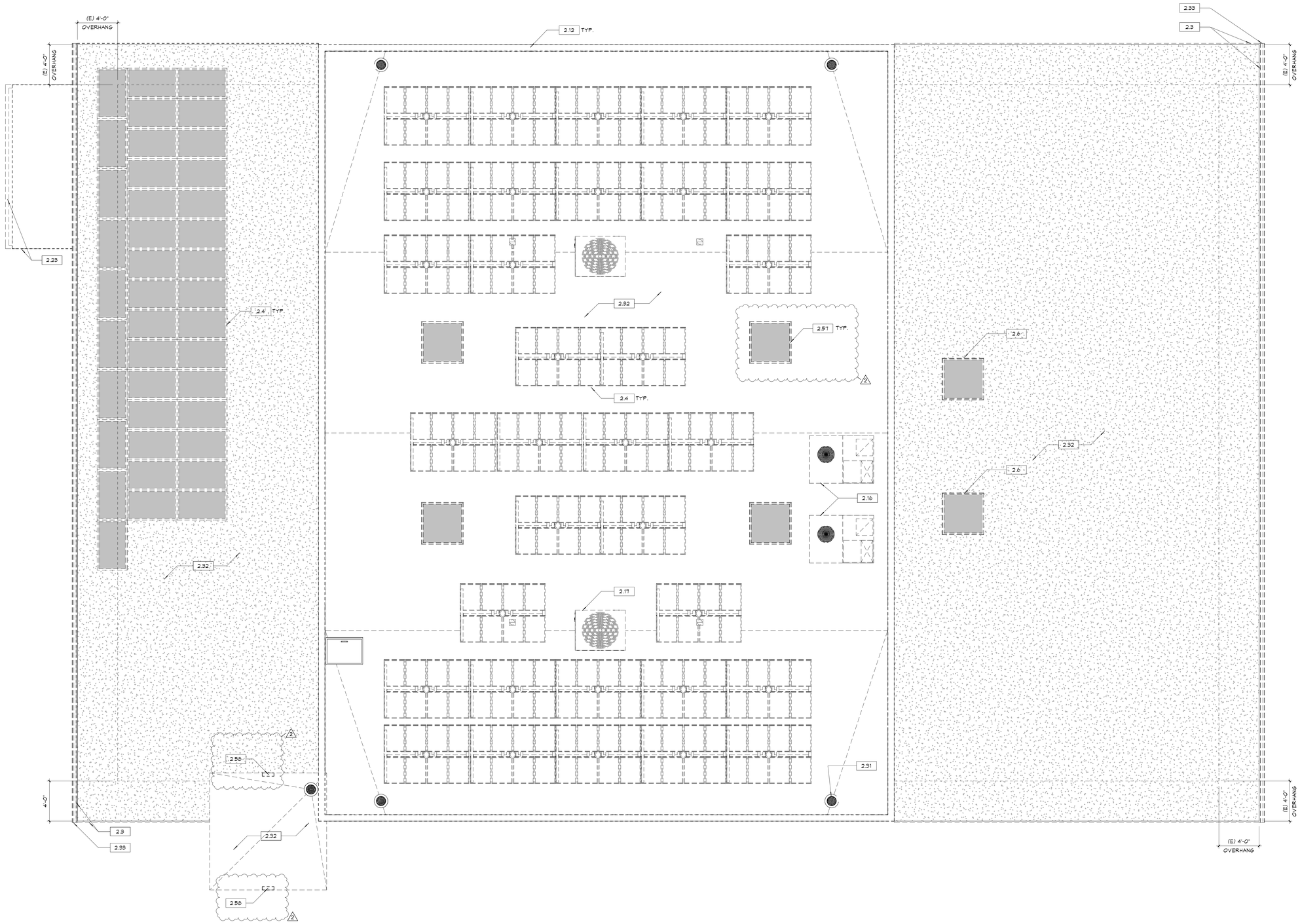

DEMOLITION ROOF PLAN
1/4" = 1'-0"

DEMOLITION GENERAL NOTES

1. CONTRACTOR SHALL NOT CUT OR ALTER STRUCTURAL MEMBERS UNLESS INDICATED TO DO SO IN THE CONTRACT DOCUMENTS OR WRITTEN APPROVAL RECEIVED FROM THE ARCHITECT.
2. UNLESS OTHERWISE NOTED ON DRAWINGS, ALL MATERIAL INDICATED TO BE REMOVED SHALL BECOME THE RESPONSIBILITY OF THE CONTRACTOR AND SHALL BE DISPOSED OUTSIDE THE PROJECT SITE.
3. CONTRACTOR TO CUT, CAP, AND REMOVE EXISTING UTILITIES AS SHOWN. IF UTILITIES OTHER THAN THOSE SHOWN ARE ENCOUNTERED, IMMEDIATELY NOTIFY THE ARCHITECT, CEASE OPERATION IN THE IMMEDIATE AREA AND DO NOT DISTURB UNTIL THE ARCHITECT DIRECTS THE DISPOSITION OF SUCH UTILITY.
4. DEMOLITION SHOWN IS DIAGRAMMATIC AND GENERAL. PERFORM ALL DEMOLITION SHOWN AND REQUIRED FOR THE CONSTRUCTION OF THE PROJECT INCLUDING ALL ITEMS IN THE WAY OF NEW WORK WHETHER OR NOT SPECIFICALLY SHOWN.
5. REFER TO MECHANICAL DRAWINGS FOR DEMOLITION RELATIVE TO HVAC SCOPE OF WORK.
6. REFER TO ELECTRICAL DRAWINGS FOR DEMOLITION RELATIVE TO ELECTRICAL SCOPE OF WORK.
7. PATCH AND REPAIR ALL EXISTING WALLS AND FINISHES TO REMAIN.

KEYNOTES

2.3	EXISTING FASCIA, REPAIR OR REPLACE AS NEEDED, NEW PAINT TO MATCH (E)
2.4	EXISTING ROOF MOUNTED SOLAR PANELS TO BE REMOVED & REPLACED BY GENERAL CONTRACTOR AS BID ALTERNATE #1
2.6	REMOVE EXISTING SKYLIGHT PATCH TO INFILL OPENING
2.12	EXISTING PARAPET CAP TO BE REMOVED & REPLACED
2.16	REMOVE AND REPLACE EXISTING AC UNIT, PATCH AND REPAIR CURB & ROOFING AS NEEDED - PREP TO RECEIVE NEW
2.17	REMOVE EXISTING EVAPORATIVE COOLING UNITS & CURB, PATCH TO INFILL OPENING
2.23	REMOVE EXISTING ROOF STRUCTURE AND WOOD FENCE
2.31	EXISTING ROOF DRAIN TO REMAIN
2.32	REMOVE EXISTING ROOFING, PATCH & REPAIR EXTERIOR PLYWOOD SUBSTRATE - PREP TO RECEIVE NEW
2.33	REMOVE EXISTING S.M. GUTTER & DOWNSPOUTS
2.57	REMOVE EXISTING SKYLIGHT, PATCH & REPAIR - PREP TO RECEIVE NEW
2.58	REMOVE EXISTING LOUVERS

LDA DESIGNERS & ARCHITECTS

Architect:
LDA Partners, Inc.
Designers & Architects
222 Central Court
Stockton, CA 95204
209.943.0405
www.ldapartners.com

LICENSED ARCHITECT
ERIC WILLIAM WOLF
C28388
September 2021
STATE OF CALIFORNIA

Client:
LATHROP-MANTECA FIRE PROTECTION DISTRICT
19001 SOMERSTON PARKWAY
LATHROP, CA 95330
209.941.5102

Project:
FIRE STATION 31 UPGRADES

800 J STREET
LATHROP CA 95330

Project No.: 757-01-20
Drawn By: RR
Checked By: EW

No.	Description	Date	By
2	PLAN CHECK #2/ADDENDA #1	12-9-2020	

3RD SUBMITTAL - BLDG. DEPT.

12/9/2020

DEMOLITION ROOF PLAN

A2.02

12/9/2020 8:08:15 PM

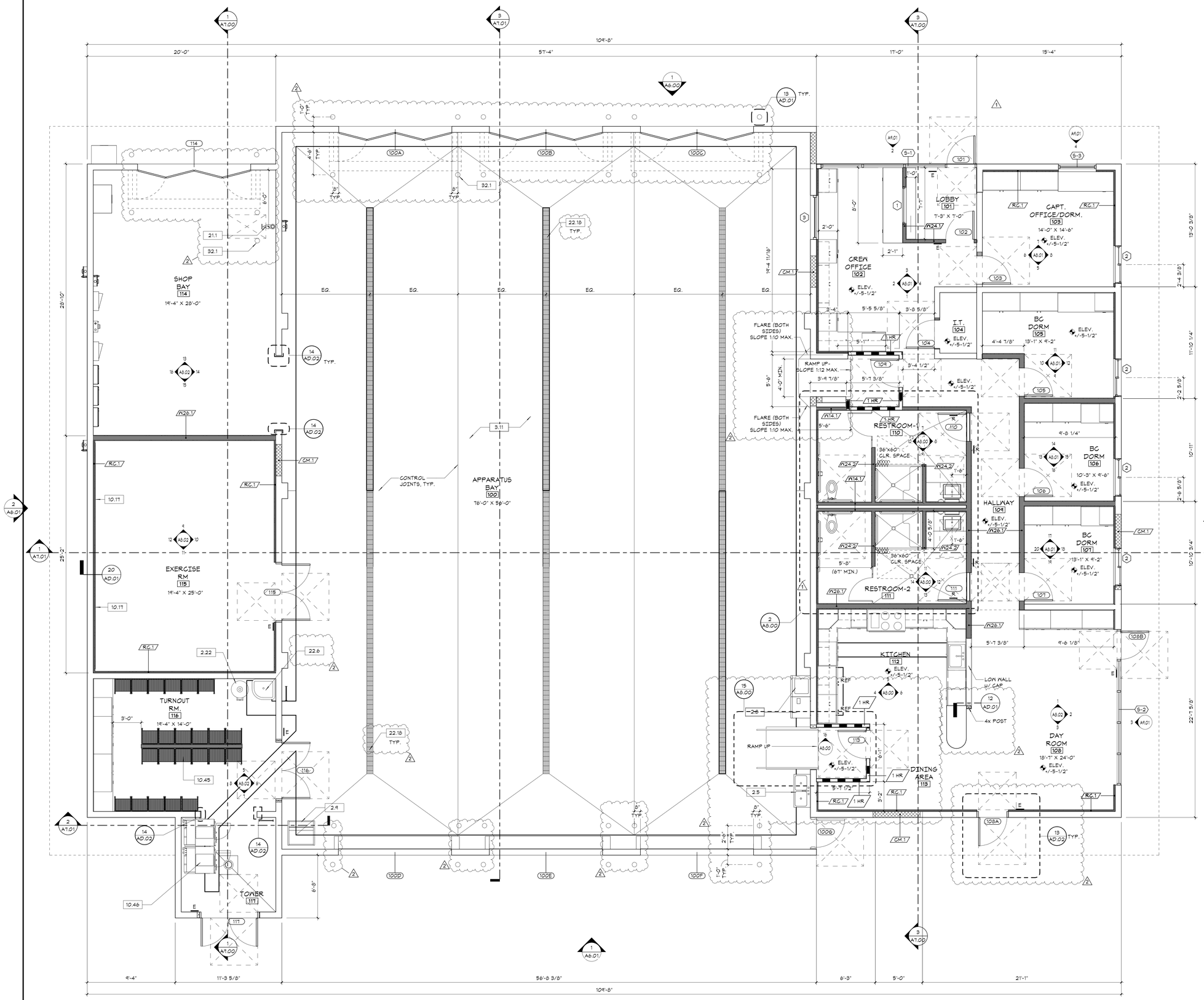

1 A5.00 FLOOR PLAN
1/4" = 1'-0"

WALL LEGEND

- EXISTING WALL TO REMAIN
- W14.1 - 2"X4" WOOD STUDS @ 16" O.C. W/ R-19 INSULATION, FULL HEIGHT SEE DETAIL 4/AD.01
- 1 HR — 1 HOUR RATED W14.1 - 2"X4" WOOD STUDS @ 16" O.C. W/ R-19 INSULATION, FULL HEIGHT. SEE DETAIL 18/AD.01
- W24.2 - 2"X4" WOOD STUDS @ 16" O.C. W/ R-19 INSULATION, 6" ABOVE CEILING. SEE DETAIL 5/AD.01
- W26.1 - 2"X6" WOOD STUDS @ 16" O.C. W/ R-19 INSULATION, FULL HEIGHT SEE DETAIL 5/AD.01
- RC.1 - 1-1/2" RESILIENT HAT CHANNEL - 6" ABOVE CLG. SEE DETAIL 3/AD.01
- CM.1 - 8" BLOCK FACADE WALL INFILL PAINTED TO MATCH (E), SEE DETAIL 10/AD.01 & S.S.D.

E EXIT TACTILE SIGN

R RESTROOM SIGN

KEYNOTES

2.5 REPLACE EXISTING SINK
2.8 EXISTING WASHER AND DRYER TO REMAIN AND REUSE
2.9 EXISTING ICE MAKER TO REMAIN AND REUSE
2.22 RELOCATE & RE-USE EXISTING WATER HEATER
3.11 CONCRETE SLAB - S.S.D.
10.17 WALL MOUNTED MIRROR, 2'-0" ABOVE RUBBER FLOORING
10.45 24"X24" WALL MOUNT FIRE LOCKERS, TYP.
10.46 45 LB. UNI-MAC WASHER EXTRACTOR, TYP.
21.1 FIRE SPRINKLER RISER - S.F.S.D.
22.6 FLOOR MOUNT UTILITY SINK, S.F.D.
32.1 6" DIA X 36" HT PAINTED CONCRETE FILLED STEEL BOLLARD

GENERAL NOTES

1. PROVIDE ADEQUATE BLOCKING IN WALLS FOR CABINETS AND OTHER WALL MOUNTED ACCESSORIES INCLUDING BUT NOT LIMITED TO HANDRAILS, SHELVING, TV SUPPORT BRACKETS, BULLETING BOARDS, MARKER BOARDS AND BATHROOM FIXTURES.
2. PROVIDE FIRE BLOCKING EVERY 10'-0" VERTICALLY & HORIZONTALLY AT CONCEALED SPACES, WALLS, PARTITIONS, CEILINGS AND INTERSECTIONS - TYP.
3. MINIMUM 1/8":12 SLOPE FOR CONCRETE FLOORS WHERE FLOOR DRAIN OCCURS.
4. CONTRACTOR TO PROVIDE SHEATHING ON THE INTERIOR SIDE OF ALL WALLS WHERE STRUCTURAL SHEATHING OCCURS TO PROVIDE A CONTINUOUS AND FLUSH WALL SURFACE FOR THE ENTIRE WALL.
5. ALL WALL FRAMING TO EXTEND TO THE BOTTOM OF THE ROOF STRUCTURE UNLESS OTHERWISE NOTED.
6. CONTRACTOR TO PATCH AND REPAIR CONCRETE SLAB WHERE SAW CUTTING FOR PLUMBING OCCURS.
7. ALL INTERIOR DOORS SHALL HAVE MIN. 18" WIDTH CLEARANCE ON THE SIDE TO WHICH THE DOOR SWINGS FROM THE STRIKE EDGE OF THE DOOR.
8. ALL EXTERIOR DOORS SHALL HAVE MIN. 24" WIDTH LEVEL AREA ON THE SIDE TO WHICH THE DOOR SWINGS FROM THE STRIKE EDGE OF THE DOOR.
9. THE MAIN ENTRANCE SHALL COMPLY WITH THE REQUIREMENTS FOR ACCESS FOR THE DISABLED.
10. PROVIDE TACTILE EXIT SIGNS AT EACH EXIT, PER 2019 CBC 1013.4.

LDA DESIGNERS & ARCHITECTS

Architect:
LDA Partners, Inc.
Designers & Architects
222 Central Court
Stockton, CA 95204
209.943.0405
www.ldapartners.com

LICENSED ARCHITECT — R. WILLIAM KEATING — C28388 — September 2021 — STATE OF CALIFORNIA

Client:
LATHROP-MANTECA FIRE PROTECTION DISTRICT
19001 SOMERSTON PARKWAY
LATHROP, CA 95330
209.941.5102

Project:
FIRE STATION 31 UPGRADES

800 J STREET
LATHROP CA 95330

Project No.: 757-01-20
Drawn By: A.C.
Checked By: E.W.

No.	Description	Date	By
1	PLAN CHECK #1 1ST REVIEW CYCLE	10-21-2020	
2	PLAN CHECK #2/ADDENDA #1	12-9-2020	

3RD SUBMITTAL - BLDG. DEPT.

12/9/2020

FLOOR PLAN

A3.00

12/9/2020 8:47:17 PM

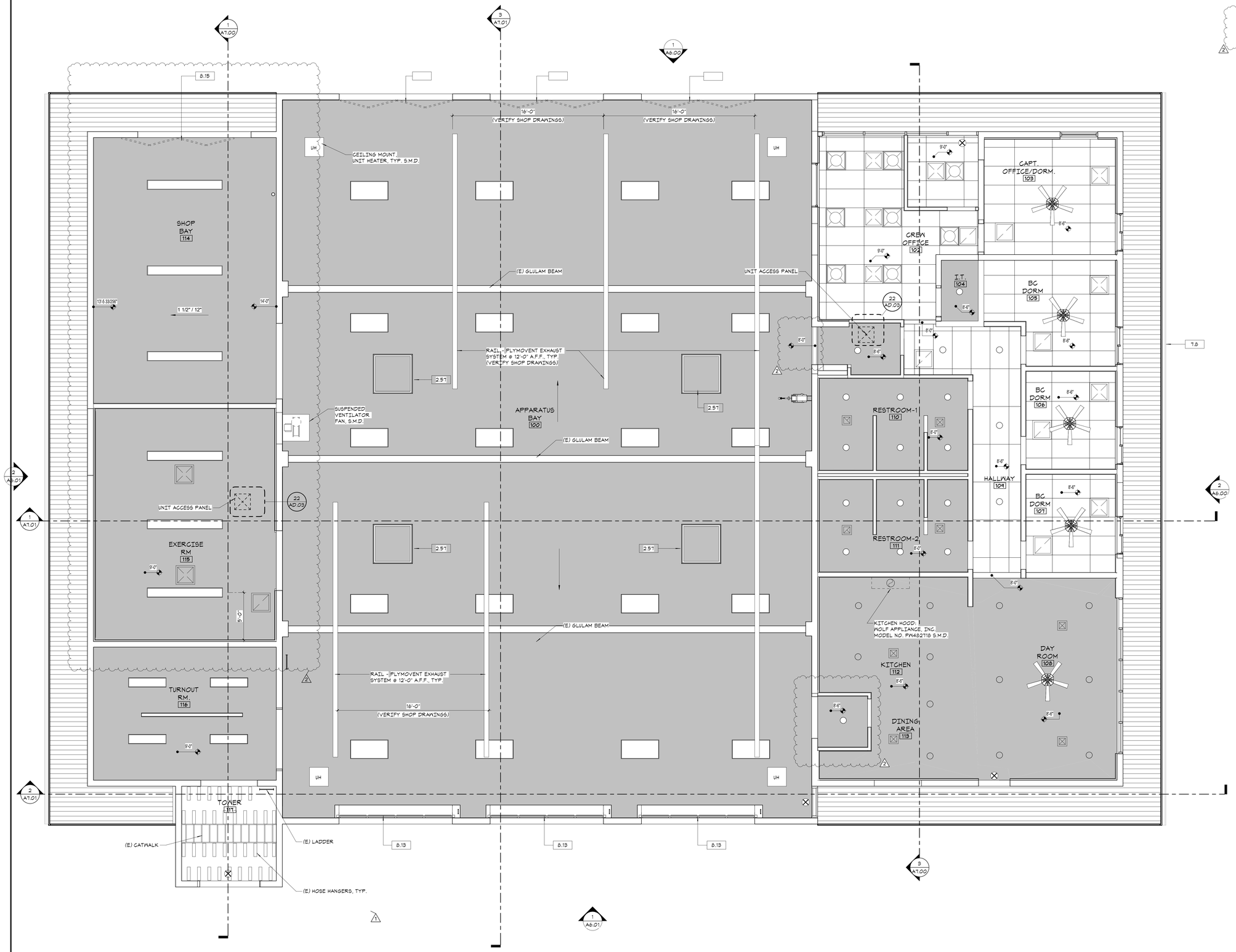

1 A4.00 REFLECTED CEILING PLAN
1/4" = 1'-0"

LEGEND

- (N) 5/8" TYPE "X" GYPSUM BOARD, TEXTURE, PRIME & PAINT, SEE FINISH SCHEDULE
- METAL SOFFIT
- (E) SUSPENDED/PENDANT LIGHT, S.E.D.
- (E) LAY-IN LIGHT FIXTURE, S.E.D.
- SURFACED MOUNTED LIGHT, S.E.D.
- RECESSED DOWN LIGHT, S.E.D.
- SUPPLY AIR REGISTER, S.M.D.
- RETURN AIR REGISTER, S.M.D.
- EXHAUST AIR REGISTER, S.M.D.
- (N) 2 x 4 SUSPENDED CEILING TILES
- (N) CEILING FAN/LIGHT, S.E.D.
- BATTERY BACK-UP ILLUMINATED EXIT SIGN @ 8'-6" A.F.F. - REFER TO ELECT. DWGS.

KEYNOTES

2.57 REMOVE EXISTING SKYLIGHT, PATCH & REPAIR - PREP TO RECEIVE NEW
7.8 GSM BEVELED GUTTER - PRIME & PAINT U.O.N.
8.13 DRUM STYLE ROLL UP DOOR SEE DOOR SCHEDULE
8.15 10' x 12' BI-FOLDING DOOR SEE DOOR SCHEDULE

LDA DESIGNERS & ARCHITECTS

Architect:
LDA Partners, Inc.
Designers & Architects
222 Central Court
Stockton, CA 95204
209.943.0405
www.ldapartners.com

LICENSED ARCHITECT ERIC WILLIAM WOHLER C28388 September 2021 STATE OF CALIFORNIA

Client:
LATHROP-MANTECA FIRE PROTECTION DISTRICT
19001 SOMERSTON PARKWAY
LATHROP, CA 95330
209.941.5102

Project:
FIRE STATION 31 UPGRADES

800 J STREET
LATHROP CA 95330

Project No.: 757-01-20
Drawn By: AC
Checked By: EW

No.	Description	Date	By
1	PLAN CHECK #1 1ST REVIEW CYCLE	10-21-2020	
2	PLAN CHECK #2/ADDENDA #1	12-9-2020	

3RD SUBMITTAL - BLDG. DEPT.

12/9/2020

REFLECTED CEILING PLAN

A4.00

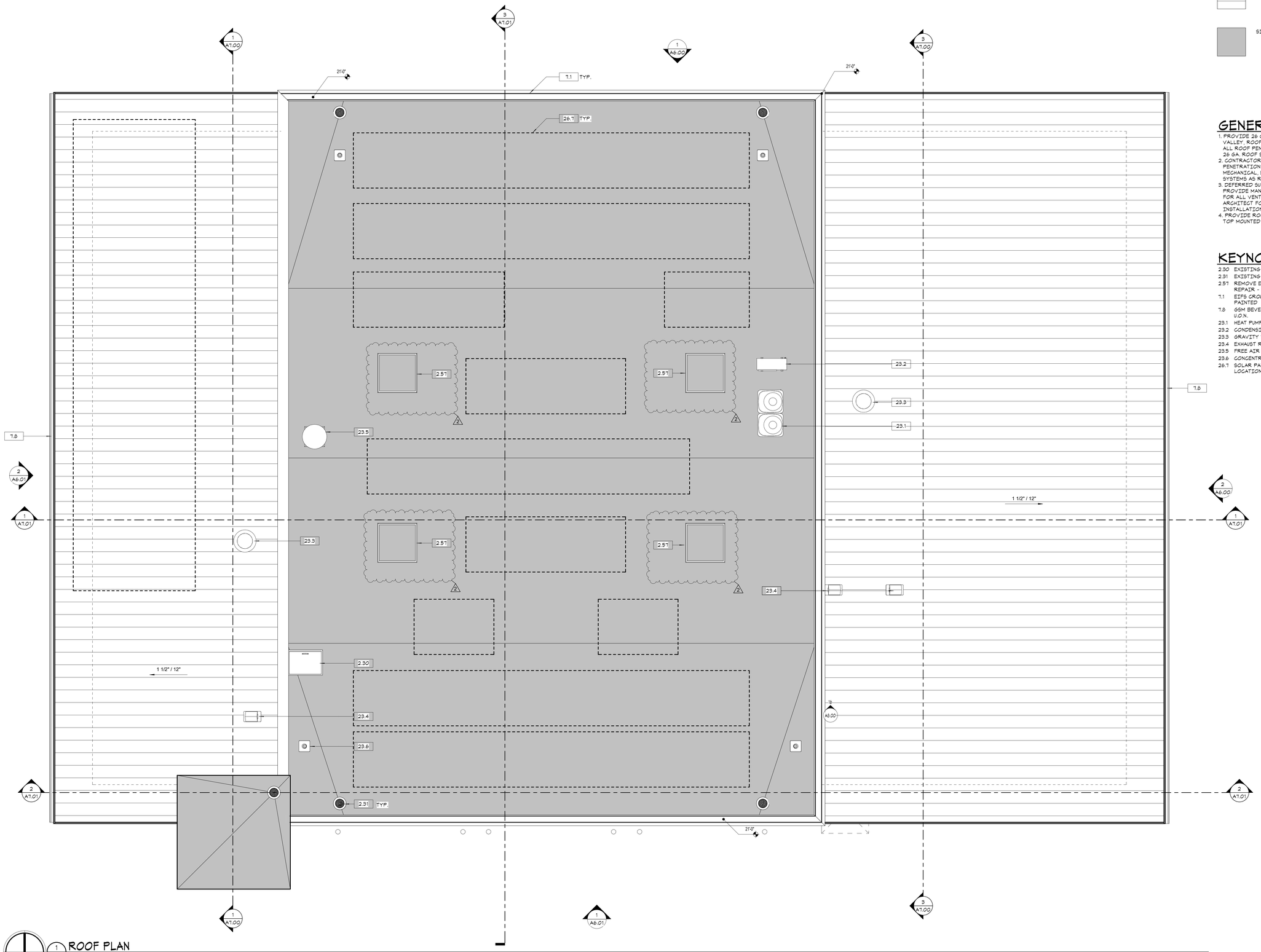

1 A5.00 ROOF PLAN
1/4" = 1'-0"

LEGEND

- SPOT ELEVATION
- STANDING SEAM METAL ROOF
- SINGLE PLY ROOF MEMBRANE

GENERAL NOTES

1. PROVIDE 26 GA. G.I. FLASHING AT ALL VALLEY, ROOF TO WALL TO HIP CONDITIONS. ALL ROOF PENETRATIONS SHALL RECEIVE A 26 GA. ROOF SAFE SET IN MASTIC.
2. CONTRACTOR TO PROVIDE ALL ROOF PENETRATIONS CURBS AND FLASHING FOR MECHANICAL, ELECTRICAL AND PLUMBING SYSTEMS AS REQUIRED.
3. DEFERRED SUBMITTAL: CONTRACTOR TO PROVIDE MANUFACTURER'S TECHNICAL DATA FOR ALL VENT DEVICES (ATTIC/SOFFIT) TO ARCHITECT FOR APPROVAL BEFORE INSTALLATION.
4. PROVIDE ROOF WALK PADS TO ALL ROOF TOP MOUNTED EQUIPMENT.

KEYNOTES

2.30	EXISTING ROOF HATCH TO REMAIN
2.31	EXISTING ROOF DRAIN TO REMAIN
2.57	REMOVE EXISTING SKYLIGHT, PATCH & REPAIR - PREP TO RECEIVE NEW
7.1	EIFS CROWN MOLDING PARAPET CAP - PAINTED
7.8	GSM BEVELED GUTTER - PRIME & PAINT U.O.N.
23.1	HEAT PUMP UNIT, S.M.D.
23.2	CONDENSING UNIT, S.M.D.
23.3	GRAVITY VENTILATOR, S.M.D.
23.4	EXHAUST ROOF CAP, S.M.D.
23.5	FREE AIR BACKDRAFT DAMPER, S.M.D.
23.6	CONCENTRIC VENT, S.M.D.
26.7	SOLAR PANELS REPLACEMENT LOCATIONS

LDA
DESIGNERS & ARCHITECTS

Architect:
LDA Partners, Inc.
Designers & Architects
222 Central Court
Stockton, CA 95204
209.943.0405
www.ldapartners.com

LICENSED ARCHITECT
ERIC WILLIAM WOHLE
C28388
September 2021
STATE OF CALIFORNIA

Client:
LATHROP-MANTECA FIRE PROTECTION DISTRICT
19001 SOMERSTON PARKWAY
LATHROP, CA 95330
209.941.5102

Project:
FIRE STATION 31 UPGRADES

800 J STREET
LATHROP CA 95330

Project No.: 757-01-20
Drawn By: A.C./R.R.
Checked By: E.W.

No.	Description	Date	By
2	PLAN CHECK #2/ADDENDA #1	12-9-2020	

3RD SUBMITTAL - BLDG. DEPT.

12/9/2020

ROOF PLAN

A5.00

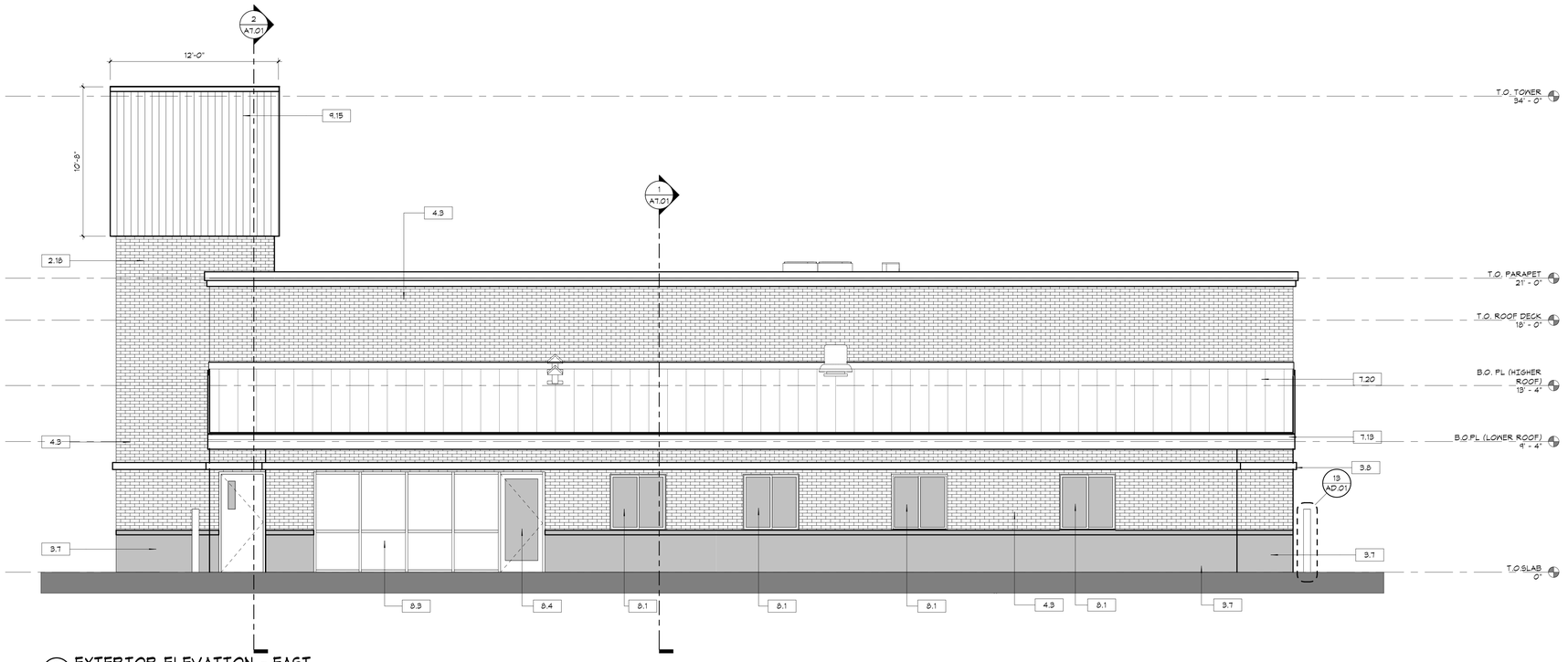

2 A6.00 EXTERIOR ELEVATION - EAST
1/4" = 1'-0"

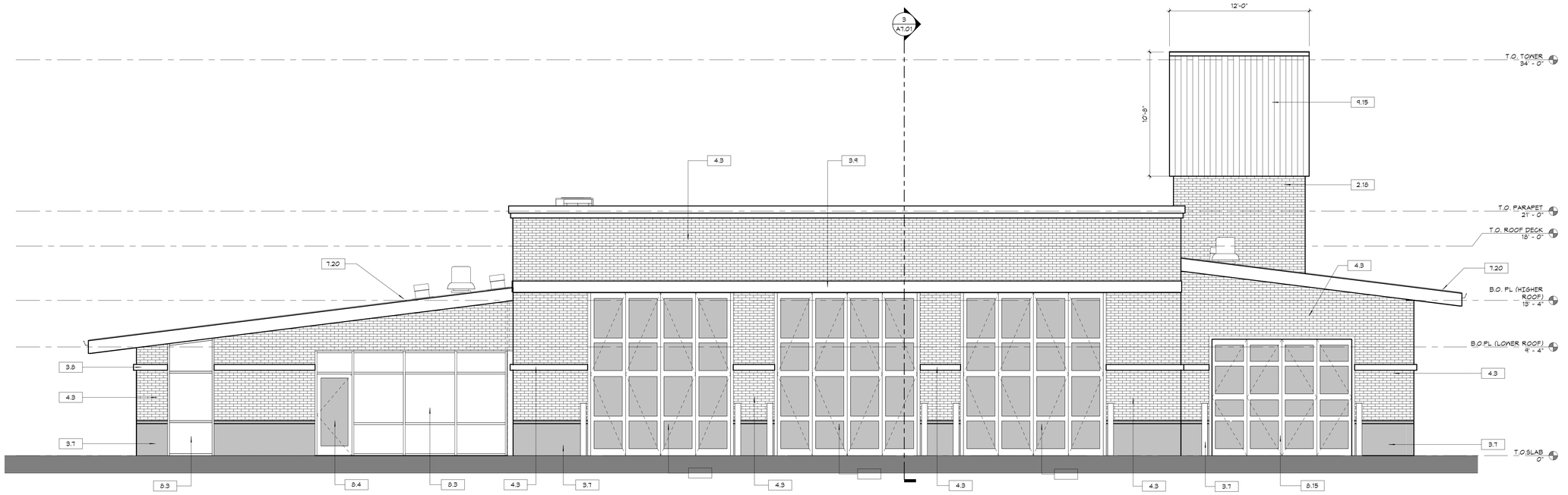

1 A6.00 EXTERIOR ELEVATION - NORTH
1/4" = 1'-0"

KEYNOTES

2.18	EXISTING CMU HOSE TOWER, WITH NEW BRICK VENEER FINISH
3.7	CEMENT PLASTER, SMOOTH FINISH
3.8	1-1/2" FOAM TRIM
3.9	1-1/2"X12 TRIM, PAINTED WHITE
4.3	THIN BRICK VENEER
7.13	GSM FASCIA, PRE-FINISHED BY MANUF.
7.20	STANDING SEAM METAL ROOF
8.1	ALUMINUM FRAMED WINDOWS
8.3	ALUMINUM STOREFRONT SYSTEM - REFER TO STOREFRONT SCHEDULE
8.4	ALUMINUM STOREFRONT DOOR - REFER TO DOOR SCHEDULE
8.15	10' x 12' BI-FOLDING DOOR SEE DOOR SCHEDULE
9.15	METAL PANELS

LDA
DESIGNERS & ARCHITECTS

Architect:
LDA Partners, Inc.
Designers & Architects
222 Central Court
Stockton, CA 95204
209.943.0405
www.ldapartners.com

LICENSED ARCHITECT
ERIC WILLIAM REED
C28388
September 2021
STATE OF CALIFORNIA

Client:
LATHROP-MANTECA FIRE PROTECTION DISTRICT
19001 SOMERSTON PARKWAY
LATHROP, CA 95330
209.941.5102

Project:
FIRE STATION 31 UPGRADES

800 J STREET
LATHROP CA 95330

Project No.: 757-01-20
Drawn By: A.C./R.R.
Checked By: E.W.

No.	Description	Date	By

3RD SUBMITTAL - BLDG. DEPT.

12/9/2020

EXTERIOR ELEVATIONS

A6.00

12/9/2020 8:48:27 PM

KEYNOTES

2.18	EXISTING CMU HOSE TOWER, WITH NEW BRICK VENEER FINISH
3.7	CEMENT PLASTER, SMOOTH FINISH
3.8	1-1/2" FOAM TRIM
3.9	1-1/2"X12 TRIM, PAINTED WHITE
4.3	THIN BRICK VENEER
7.8	GSM BEVELED GUTTER - PRIME & PAINT U.O.N.
7.13	GSM FASCIA, PRE-FINISHED BY MANUF.
7.20	STANDING SEAM METAL ROOF
8.9	HOLLOW METAL DOOR - REFER TO DOOR SCHEDULE
9.15	METAL PANELS

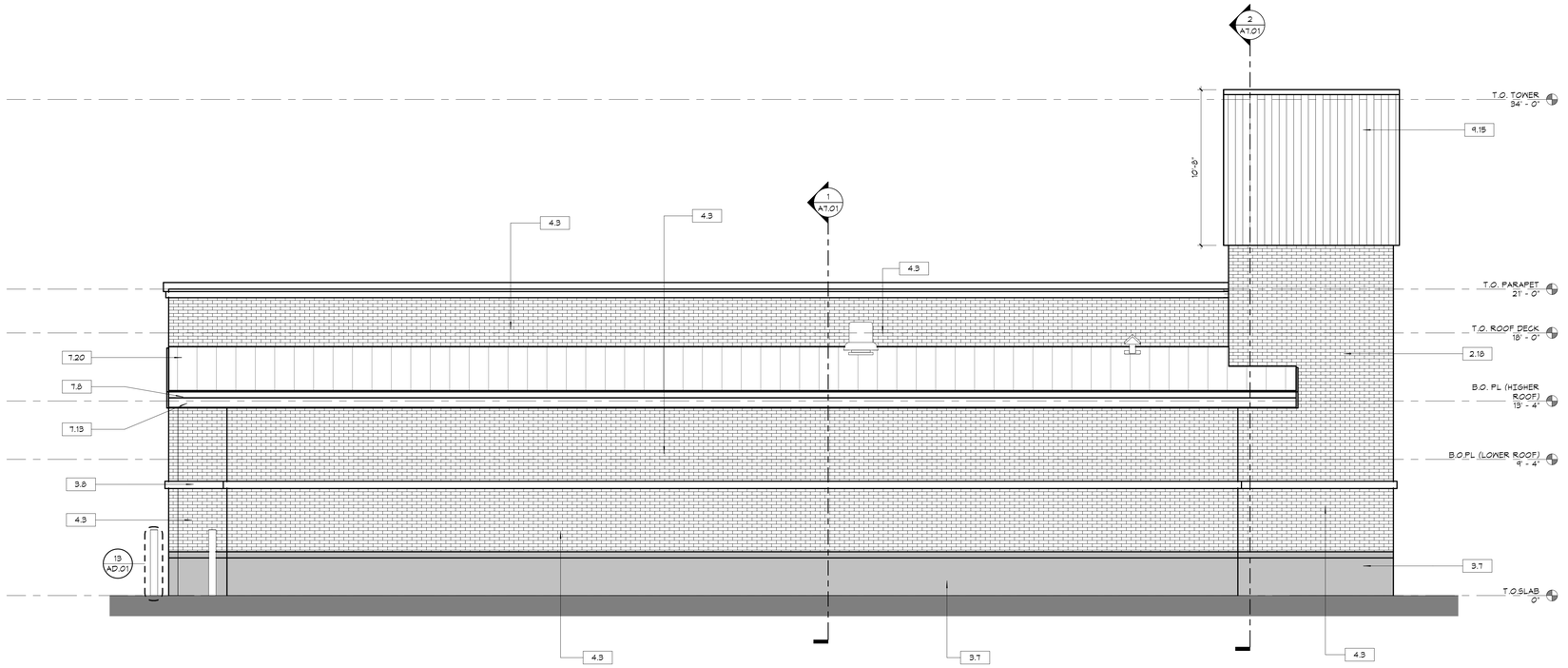

2 A6.01 EXTERIOR ELEVATION - WEST
1/4" = 1'-0"

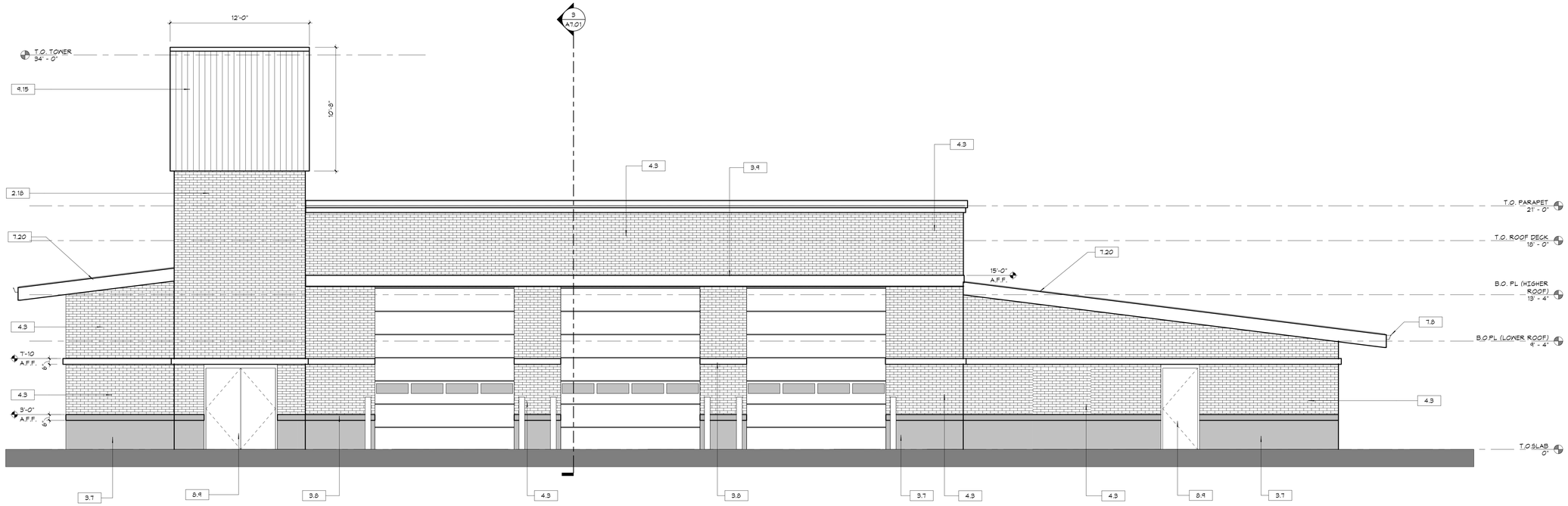

1 A6.01 EXTERIOR ELEVATION - SOUTH
1/4" = 1'-0"

LDA
DESIGNERS & ARCHITECTS

Architect:
LDA Partners, Inc.
Designers & Architects
222 Central Court
Stockton, CA 95204
209.943.0405
www.ldapartners.com

LICENSED ARCHITECT
ERIC WILLIAM WERK
C28388
September 2021
STATE OF CALIFORNIA

Client:
LATHROP-MANTECA FIRE PROTECTION DISTRICT
19001 SOMERSTON PARKWAY
LATHROP, CA 95330
209.941.5102

Project:
FIRE STATION 31 UPGRADES

800 J STREET
LATHROP CA 95330

Project No.: 757-01-20
Drawn By: A.C./R.R.
Checked By: E.W.

No.	Description	Date	By

3RD SUBMITTAL - BLDG. DEPT.

12/9/2020

EXTERIOR ELEVATIONS

A6.01

12/9/2020 8:18:30 PM

KEYNOTES

2.14	EXISTING CMU WALL TO REMAIN, NEW PAINTING TO MATCH (E)
2.37	EXISTING ELECTRICAL SWITCH BOARD TO REMAIN, S.E.D.
2.38	REMOVE AND REPLACE EXISTING ELECTRICAL PULL STATION, S.E.D.
2.46	EXISTING CATWALK TO REMAIN
2.47	EXISTING HOSE HANGER TO REMAIN, TYP.
3.7	CEMENT PLASTER, SMOOTH FINISH
3.8	1-1/2" FOAM TRIM
3.10	CROWN MOULDING, PAINTED WHITE
4.3	THIN BRICK VENEER
6.8	SOLID SURFACE COUNTERTOP W/ 4" BACKSPLASH TOP @ 2'-10" A.F.F. MAX.
6.9	SOLID SURFACE COUNTERTOP TOP @ 2'-10" A.F.F. MAX.
7.20	STANDING SEAM METAL ROOF
7.24	R-38 BATT INSULATION AT ROOF
9.12	5/8" TYPE 'X' GYPSUM BOARD, PAINTED, SEMI-GLOSS, SEE SCHEDULE
9.15	METAL PANELS
10.17	WALL MOUNTED MIRROR, 2'-0" ABOVE RUBBER FLOORING
10.44	2'-0" RUBBER WAINSCOTING MATCHING RUBBER FLOORING
10.45	24"X24" WALL MOUNT FIRE LOCKERS, TYP.
10.46	45 LB. UNI-MAC WASHER EXTRACTOR, TYP.
23.7	FAN COIL UNIT, S.M.D.
26.3	SUSPENDED LIGHT FIXTURE S.E.D.

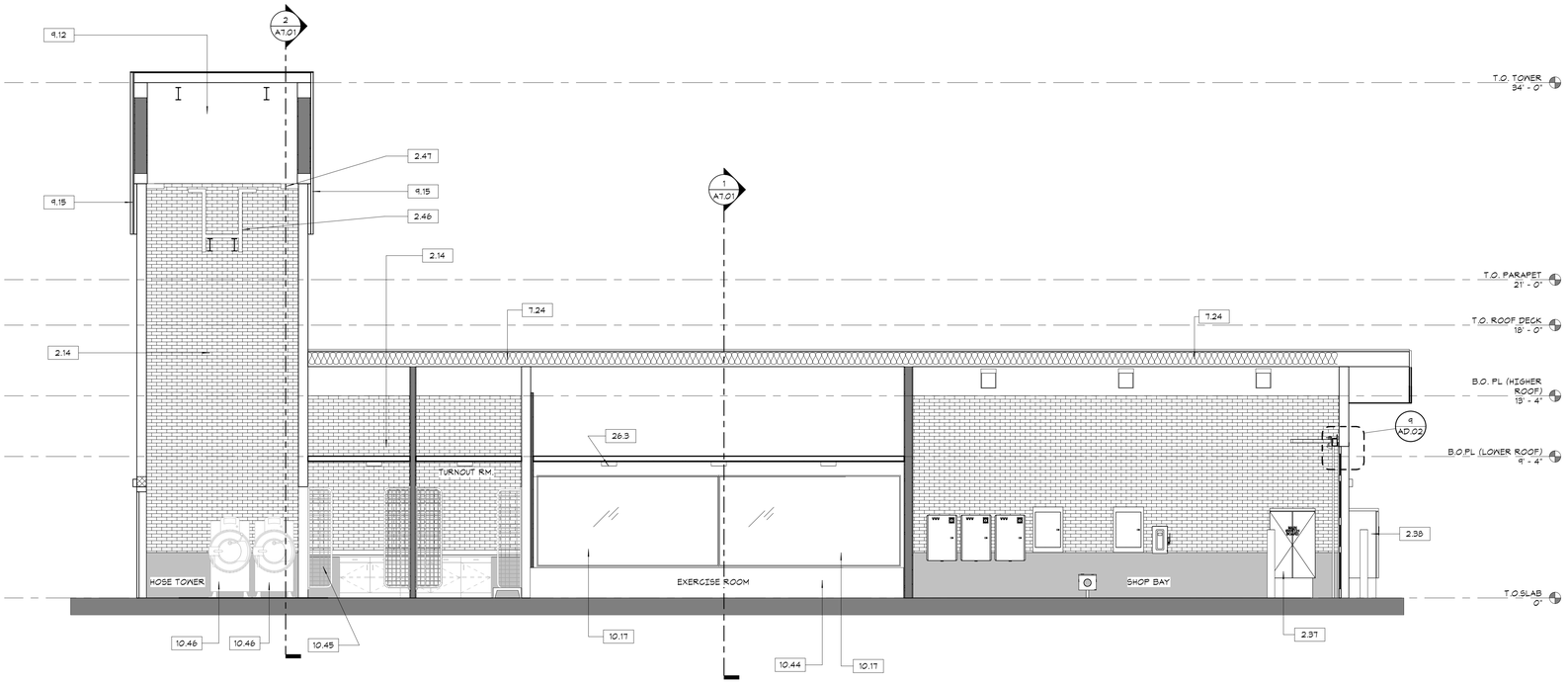

1 A7.00 BUILDING SECTION A
1/4" = 1'-0"

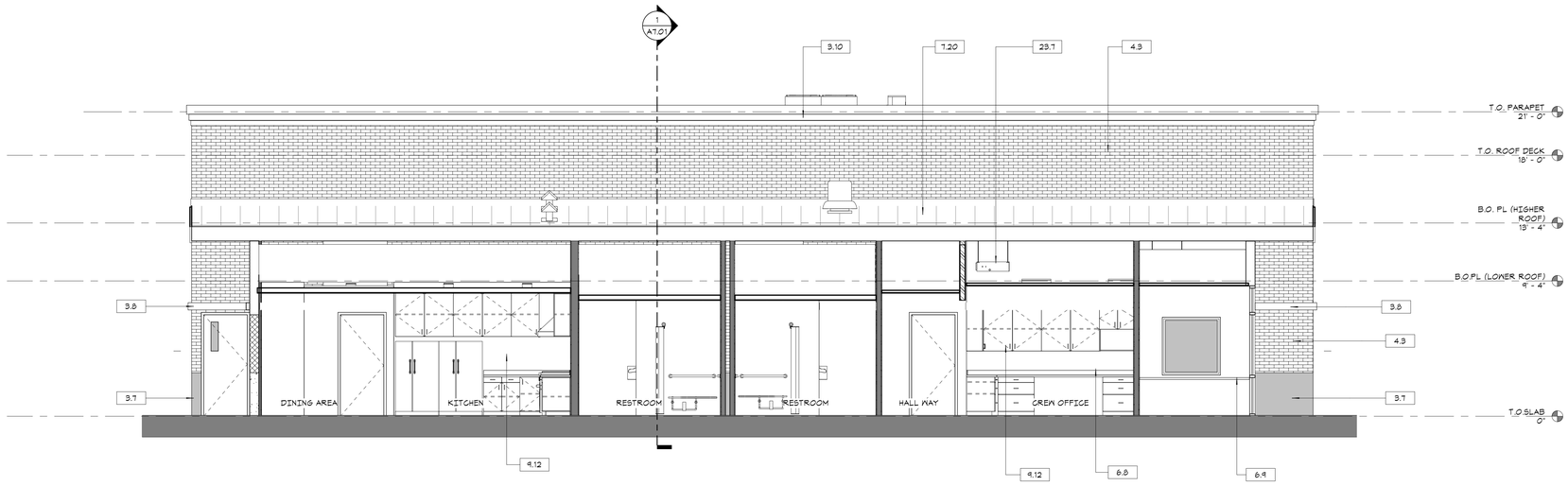

3 A7.00 BUILDING SECTION B
1/4" = 1'-0"

DESIGNERS & ARCHITECTS

Architect:
LDA Partners, Inc.
Designers & Architects
222 Central Court
Stockton, CA 95204
209.943.0405
www.ldapartners.com

LICENSED ARCHITECT
R. WILLIAM WEBB
C28388
September 2021
STATE OF CALIFORNIA

Client:
LATHROP-MANTECA FIRE PROTECTION DISTRICT
19001 SOMERSTON PARKWAY
LATHROP, CA 95330
209.941.5102

Project:
FIRE STATION 31 UPGRADES

800 J STREET
LATHROP CA 95330

Project No.: 757-01-20
Drawn By: A.C.
Checked By: E.W.

No.	Description	Date	By

3RD SUBMITTAL - BLDG. DEPT.

12/9/2020

BUILDING SECTIONS

A7.00

PLOT DATE: 12/9/2020 10:09:15 AM

KEYNOTES

2.9	EXISTING ICE MAKER TO REMAIN AND REUSE
2.14	EXISTING CMU WALL TO REMAIN, NEW PAINTING TO MATCH (E)
2.30	EXISTING ROOF HATCH TO REMAIN
2.48	EXISTING LADDER TO REMAIN
2.50	EXISTING GLULAM BEAM, TYP.
2.51	EXISTING 2X12 JOIST, TYP.
3.7	CEMENT PLASTER, SMOOTH FINISH
3.8	1-1/2" FOAM TRIM
4.3	THIN BRICK VENEER
7.24	R-38 BATT INSULATION AT ROOF
9.12	5/8" TYPE "X" GYPSUM BOARD, PAINTED, SEMI-GLOSS, SEE SCHEDULE
9.15	METAL PANELS
10.47	VEHICLE EXHAUST REMOVAL SYSTEM
23.7	FAN COIL UNIT, S.M.D.
26.3	SUSPENDED LIGHT FIXTURE S.E.D.

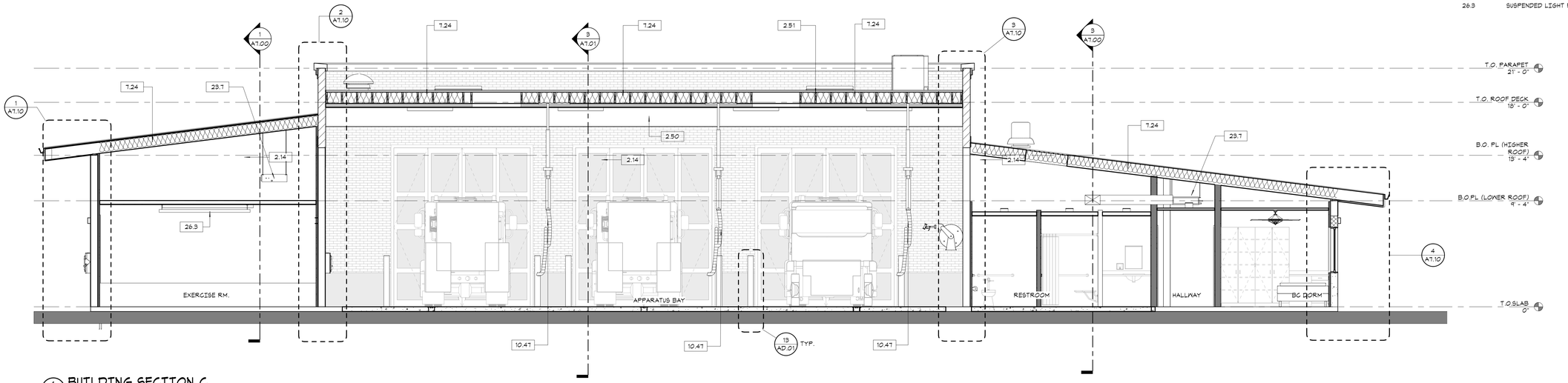

1 A7.01 BUILDING SECTION C
1/4" = 1'-0"

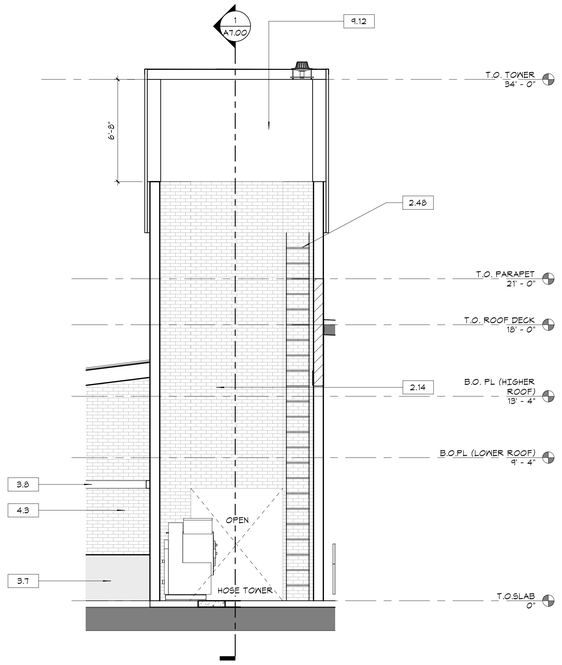

2 A7.01 BUILDING SECTION D
1/4" = 1'-0"

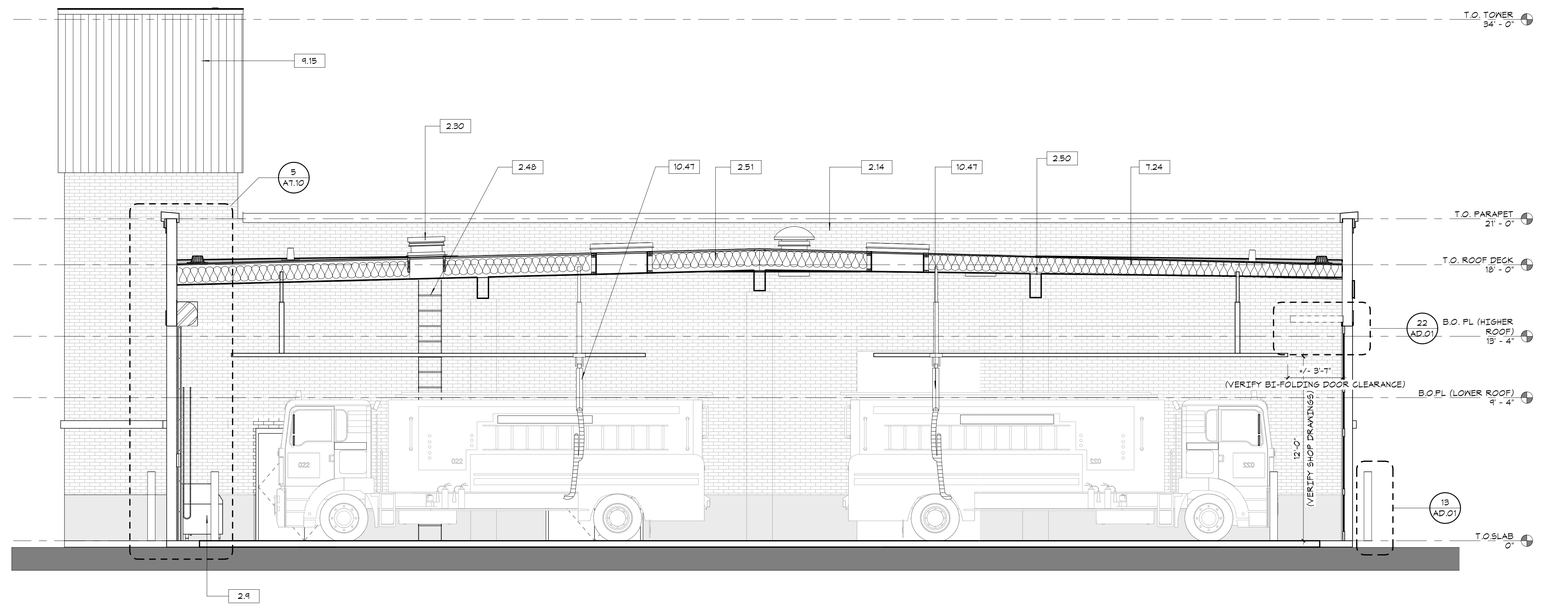

3 A7.01 BUILDING SECTION
1/4" = 1'-0"

LDA DESIGNERS & ARCHITECTS

Architect:
LDA Partners, Inc.
Designers & Architects
222 Central Court
Stockton, CA 95204
209.943.0405
www.ldapartners.com

LICENSED ARCHITECT ERIC WILLIAM WOHLER C28388 September 2021 STATE OF CALIFORNIA

Client:
LATHROP-MANTECA FIRE PROTECTION DISTRICT
19001 SOMERSTON PARKWAY
LATHROP, CA 95330
209.941.5102

Project:
FIRE STATION 31 UPGRADES

800 J STREET
LATHROP CA 95330

Project No.: 757-01-20
Drawn By: A.C.
Checked By: E.W.

No.	Description	Date	By

3RD SUBMITTAL - BLDG. DEPT.

12/9/2020

BUILDING SECTIONS

A7.01

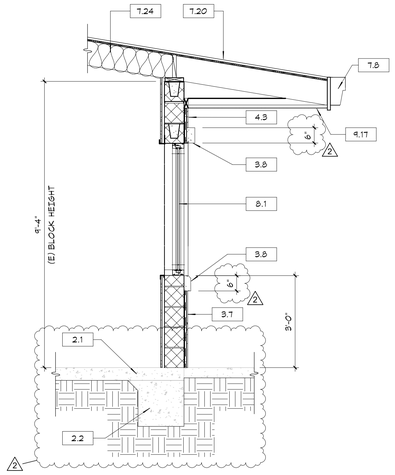

4 A7.10 WALL SECTION 4
1/2" = 1'-0"

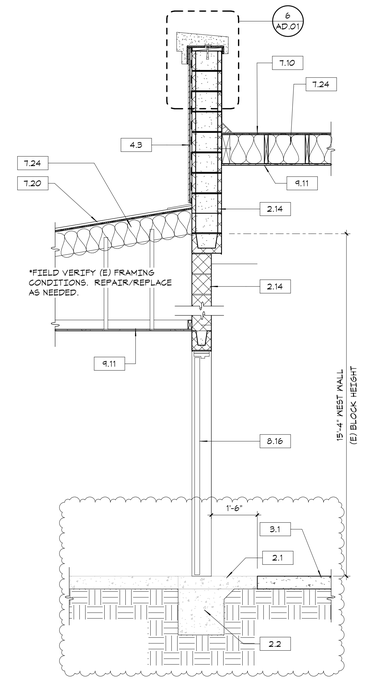

2 A7.10 WALL SECTION 2
1/2" = 1'-0"

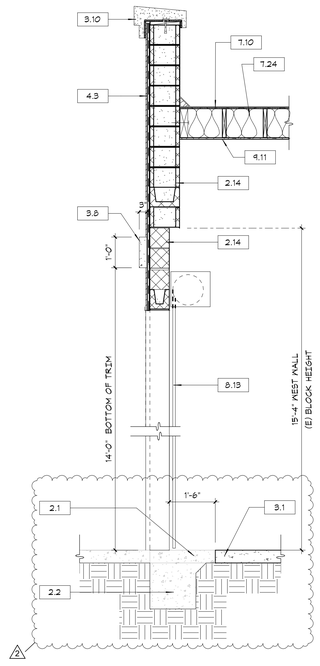

5 A7.10 WALL SECTION 5
1/2" = 1'-0"

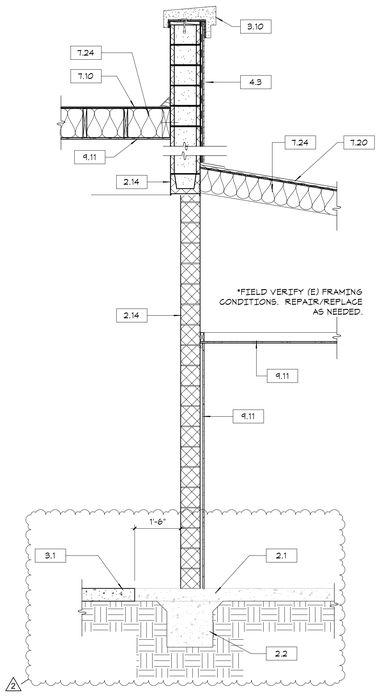

3 A7.10 WALL SECTION 3
1/2" = 1'-0"

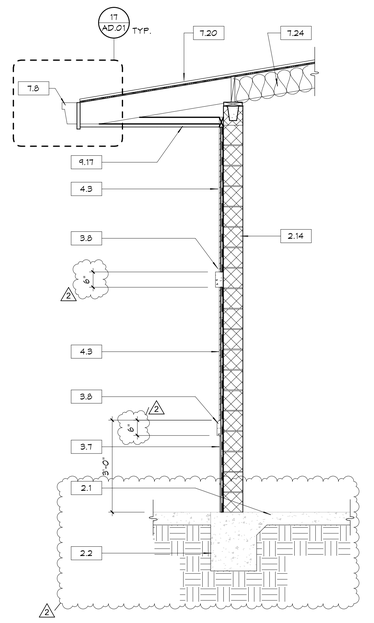

1 A7.10 WALL SECTION 1
1/2" = 1'-0"

KEYNOTES

2.1	EXISTING CONCRETE SLAB TO REMAIN
2.2	EXISTING CONCRETE FOOTING TO REMAIN
2.14	EXISTING CMU WALL TO REMAIN, NEW PAINTING TO MATCH (E)
3.1	CONCRETE SLAB - S.S.D.
3.7	CEMENT PLASTER, SMOOTH FINISH
3.8	1-1/2" FOAM TRIM
3.10	CROWN MOULDING, PAINTED WHITE
4.3	THIN BRICK VENEER
7.8	GSM BEVELED GUTTER - PRIME & PAINT U.O.N.
7.10	SINGLE-PLY ROOFING MEMBRANE
7.20	STANDING SEAM METAL ROOF
7.24	R-38 BATT INSULATION AT ROOF
8.1	ALUMINUM FRAMED WINDOWS
8.13	DRUM STYLE ROLL UP DOOR SEE DOOR SCHEDULE
8.16	SOLID CORE WOOD DOOR - REFER TO DOOR SCHEDULE
9.11	5/8" TYPE "X" GYPSUM BOARD, PAINTED, SEE SCHEDULE
9.17	METAL SOFFIT

LDA
DESIGNERS & ARCHITECTS

Architect:
LDA Partners, Inc.
Designers & Architects
222 Central Court
Stockton, CA 95204
209.943.0405
www.ldapartners.com

LICENSED ARCHITECT
ERIC WILLIAM WOHLE
C28388
September 2021
STATE OF CALIFORNIA

Client:
LATHROP-MANTECA FIRE PROTECTION DISTRICT
19001 SOMERSTON PARKWAY
LATHROP, CA 95330
209.941.5102

Project:
FIRE STATION 31 UPGRADES

800 J STREET
LATHROP CA 95330

Project No.: 757-01-20
Drawn By: A.C.
Checked By: E.W.

No.	Description	Date	By
2	PLAN CHECK #2/ADDENDA #1	12-9-2020	

3RD SUBMITTAL - BLDG. DEPT.

12/9/2020

WALL SECTIONS

A7.10

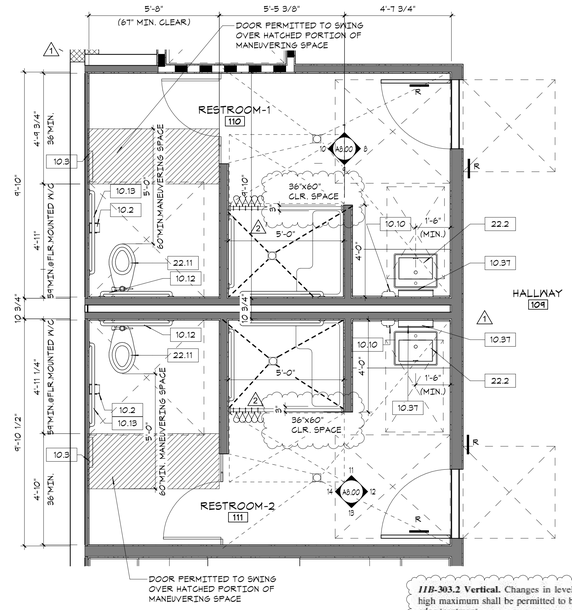

2 A8.00 ENLARGED RESTROOM PLANS
3/8" = 1'-0"

NOTE:
1. THRESHOLDS IN ROLL-IN TYPE SHOWER COMPARTMENTS SHALL BE 1/2" HIGH MAXIMUM IN ACCORDANCE WITH CBC SECTION 11B-303.

***11B*-303.2 Vertical.** Changes in level of 1/4 inch (6.4 mm) high maximum shall be permitted to be vertical *and without edge treatment.*

FIGURE *11B*-303.2
VERTICAL CHANGE IN LEVEL

***11B*-303.3 Beveled.** Changes in level between 1/4 inch (6.4 mm) high minimum and 1/2 inch (12.7 mm) high maximum shall be beveled with a slope not steeper than 1:2.

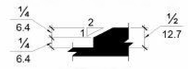

FIGURE *11B*-303.3
BEVELED CHANGE IN LEVEL

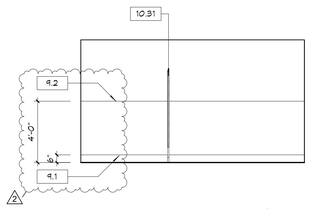

7 A8.00 RESTROOM-1 - North
1/4" = 1'-0"

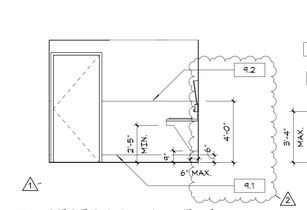

8 A8.00 RESTROOM-1 - East
1/4" = 1'-0"

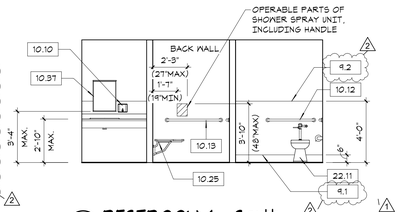

9 A8.00 RESTROOM-1 - South
1/4" = 1'-0"

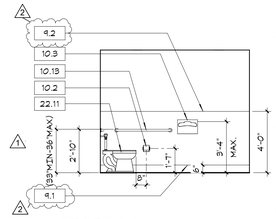

10 A8.00 RESTROOM-1 - West
1/4" = 1'-0"

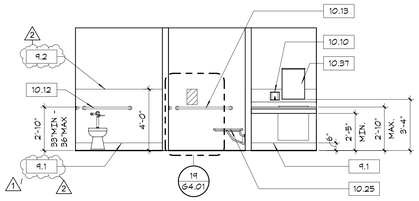

11 A8.00 RESTROOM-2 - North
1/4" = 1'-0"

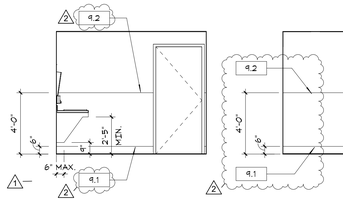

12 A8.00 RESTROOM-2 - East
1/4" = 1'-0"

13 A8.00 RESTROOM-2 - South
1/4" = 1'-0"

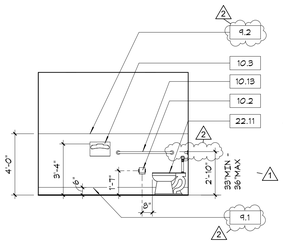

14 A8.00 RESTROOM-2 - West
1/4" = 1'-0"

GENERAL - NOTES

1. UNLESS OTHERWISE NOTED OR INDICATED, ALL DIMENSIONS SHOWN ARE TO FACE OF FRAMING, CONC. SLAB AND/OR CMU.
2. CONTRACTOR SHALL WORK TOWARD DIMENSIONS WITH TOLERANCES +/- SHOWN.
3. PROVIDE ADEQUATE BLOCKING IN WALLS FOR CABINETS AND OTHER WALL MOUNTED ACCESSORIES INCLUDING BUT NOT LIMITED TO HANDRAILS, SHELVING, TV SUPPORT BRACKETS, BULLETING BOARDS, MARKER BOARDS AND BATHROOM FIXTURES.
4. PROVIDE FIRE BLOCKING EVERY 10'-0" VERTICALLY & HORIZONTALLY AT CONCEALED SPACES, WALLS, PARTITIONS, CEILINGS AND INTERSECTIONS - TYP.
5. CONTRACTOR TO PROVIDE SHEATHING ON THE INTERIOR SIDE OF ALL WALLS WHERE STRUCTURAL SHEATHING OCCURS TO PROVIDE A CONTINUOUS AND FLUSH WALL SURFACE FOR THE ENTIRE WALL.
6. ALL INTERIOR DOORS SHALL HAVE MIN. 18" WIDTH CLEARANCE ON THE SIDE TO WHICH THE DOOR SWINGS FROM THE STRIKE EDGE OF THE DOOR.
7. ALL EXTERIOR DOORS SHALL HAVE MIN. 24" WIDTH LEVEL AREA ON THE SIDE TO WHICH THE DOOR SWINGS FROM THE STRIKE EDGE OF THE DOOR.
8. EQUIPMENT IS PER OWNER UNLESS OTHERWISE NOTED. CONTRACTOR TO INSTALL ALL GAS, WATER, PLUMBING PER EQUIPMENT REQUIREMENTS. REFER TO OWNER FOR REQUIREMENTS.
9. MINIMUM 1/8":12 SLOPE FOR CONCRETE FLOORS WHERE FLOOR DRAIN OCCURS.
10. PROVIDE TACTILE EXIT SIGNS AT EACH EXIT PER 2010 CBC 1011.3.
11. REFER TO SHEET A64.00 ACCESSIBILITY STANDARDS AND 64.10 ACCESSIBILITY DETAILS FOR ADDITIONAL INFORMATION AND TYPICAL ACCESSIBLE DETAILS.
12. REFER TO ROOM FINISH PLAN FOR ALL FINISH DESIGNATIONS
13. REFER TO STRUCTURAL DWGS. FOR LOCATIONS AND EXTENT OF CONCRETE CURB AT INTERIOR WALLS.

KEYNOTES

6.1 P. LAM FACED BASE CABINET w/ DRAWER, DOOR & ADJUSTABLE SHELF
6.2 P. LAM FACED BASE CABINET w/ DRAWERS, DOORS & ADJUSTABLE SHELF
6.3 P. LAM FACED BASE CORNER CABINET & ADJUSTABLE SHELF
6.4 P. LAM FACED SINK CABINET w/ INTEGRAL TOE KICK ON DOORS
6.5 P. LAM FACED UPPER CORNER CABINET w/ DOOR & ADJUSTABLE SHELF
6.6 P. LAM FACED UPPER CABINET w/ DOORS AND ADJUSTABLE SHELVES
6.7 P. LAM FACED BASE CABINET w/ DRAWERS
6.8 SOLID SURFACE COUNTERTOP w/ 4" BACKSPLASH TOP @ 2'-10" A.F.F. MAX.
9.1 EPOXY BASE w SCHLUTER EDGE TOP, SEE SCHEDULE
9.2 FRP - FIBER REINFORCE PANEL, SEE SCHEDULE
10.2 TOILET TISSUE DISPNSER; MOUNT @ 19" HT. A.F.F. TO DISPENSER OUTLET AND 1'-4" FRONT OF BOWL TO CENTERLINE OF DISPENSER
10.3 WALL MOUNTED TOILET SEAT COVER DISPENSER. MOUNT DISPENSEROPENING @ 40" HT. MAX A.F.F.
10.10 SOAP DISPENSER, WALL MOUNTED. MOUNT CENTER OF CONTROLS @ 40" HT. A.F.F.
10.12 GRAB BAR 36" MOUNT TOP OF BAR AT 33" - 36" A.F.F.
10.13 GRAB BAR 42" MOUNT TOP OF BAR AT 33" - 36" A.F.F.
10.25 ADA S.S. FOLDING SHOWER SEAT, MOUNT @ 17"- 19" A.F.F.
10.31 TOILET "ADA" COMPARTMENTS w/36" WIDE DRS & BOT. OF PANELS 12" A.F.F. MAX. TYP.
10.31 36" HIGH MIRROR; MOUNT @ 40" MAX. A.F.F. TO BOTTOM OF REFLECTING SURFACE
11.1 REFRIDGERATOR
11.2 DISHWASHER
11.3 GAS RANGE
11.4 RANGE HOOD
11.5 GARBAGE DISPOSAL
22.2 LAVATORY; MOUNT TOP OF RIM @ 2'10" A.F.F
22.7 S.S. ONE COMPARTMENT KITCHEN SINK, S.P.D.
22.8 HIGH OUTPUT FAST FLOW REVERSE OSMOSIS DRINKING WATER SYSTEM
22.11 WATER CLOSET S.P.D.

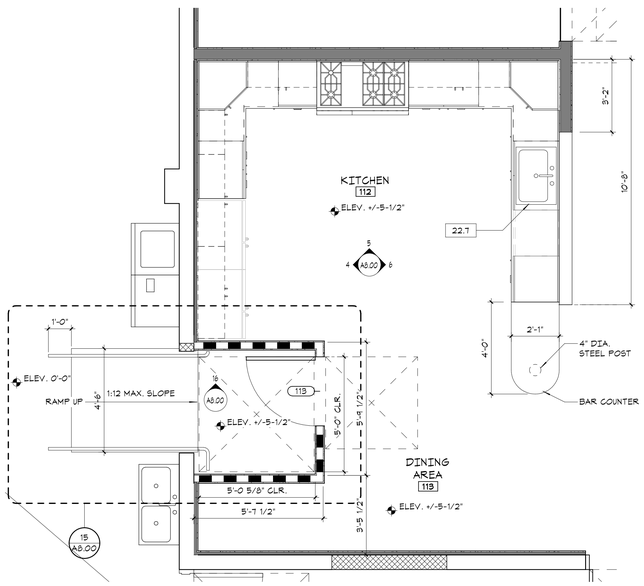

3 A8.00 ENLARGED KITCHEN-DINING FLOOR PLAN
3/8" = 1'-0"

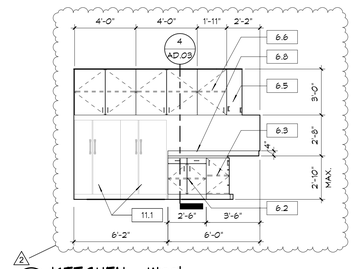

4 A8.00 KITCHEN - West
1/4" = 1'-0"

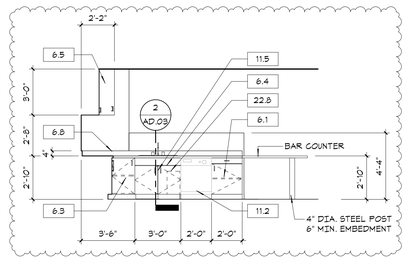

6 A8.00 KITCHEN - East
1/4" = 1'-0"

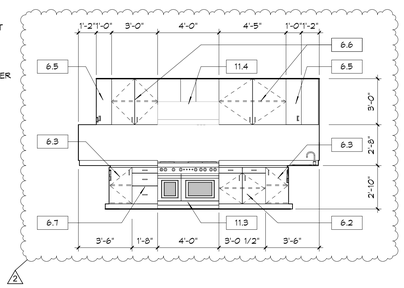

5 A8.00 KITCHEN - North
1/4" = 1'-0"

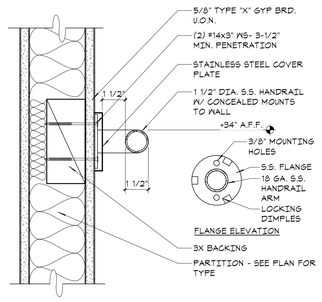

17 A8.00 HANDRAIL MOUNTING
3" = 1'-0"

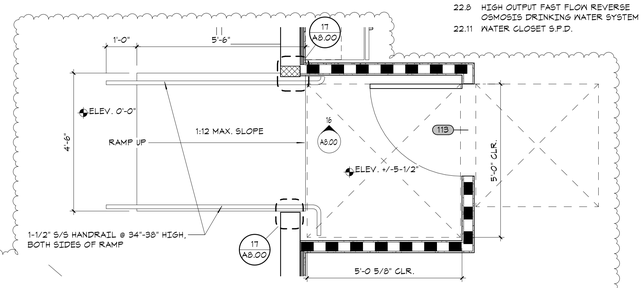

15 A8.00 RAMP DETAIL @KITCHEN
1/2" = 1'-0"

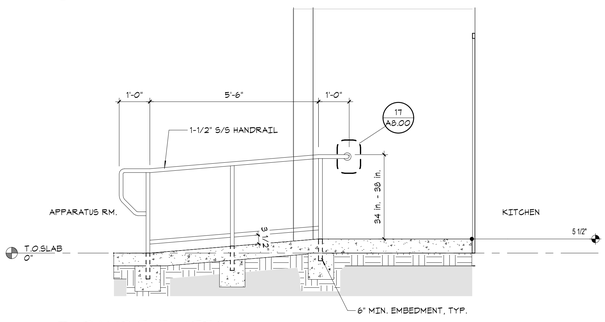

16 A8.00 RAMP ELEVATION
1/2" = 1'-0"

LDA
DESIGNERS & ARCHITECTS

Architect:
LDA Partners, Inc.
Designers & Architects
222 Central Court
Stockton, CA 95204
209.943.0405
www.ldapartners.com

LICENSED ARCHITECT — R. WILLIAM KIRK — C28388 — September 2021 — STATE OF CALIFORNIA

Client:
LATHROP-MANTECA FIRE PROTECTION DISTRICT
19001 SOMERSTON PARKWAY
LATHROP, CA 95330
209.941.5102

Project:
FIRE STATION 31 UPGRADES

800 J STREET
LATHROP CA 95330

Project No.: 757-01-20
Drawn By: A.C.
Checked By: E.W.

No.	Description	Date	By
1	PLAN CHECK #1 1ST REVIEW CYCLE	10-21-2020	
2	PLAN CHECK #2/ADDENDA #1	12-9-2020	

3RD SUBMITTAL - BLDG. DEPT.

12/9/2020

ENLARGED FLOOR PLAN & INTERIOR ELEVATIONS

A8.00

2020-0140.01 TM

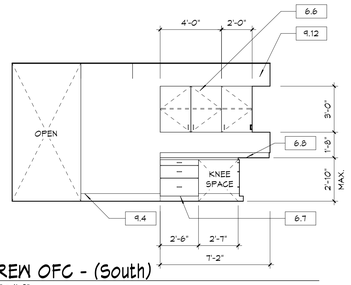

1 A8.01 CREW OFC - (South)
1/4" = 1'-0"

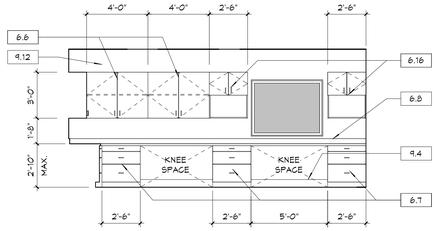

2 A8.01 CREW OFC. - (West)
1/4" = 1'-0"

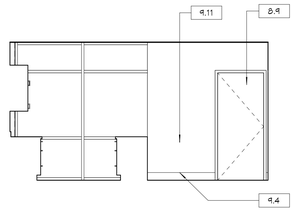

3 A8.01 CREW OFC. - (North)
1/4" = 1'-0"

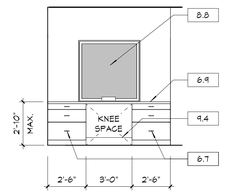

4 A8.01 CREW OFC. - (East)
1/4" = 1'-0"

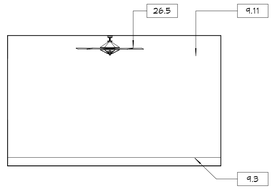

5 A8.01 CAPT. OFC./DORM - (South)
1/4" = 1'-0"

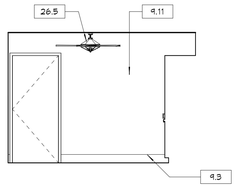

6 A8.01 CAPT. OFC/DORM - (West)
1/4" = 1'-0"

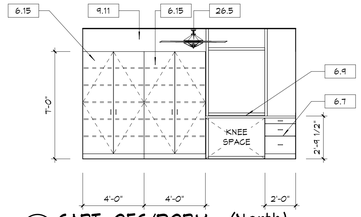

7 A8.01 CAPT. OFC/DORM - (North)
1/4" = 1'-0"

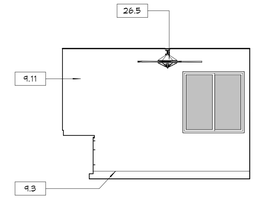

8 A8.01 CAPT. OFC./DORM - (East)
1/4" = 1'-0"

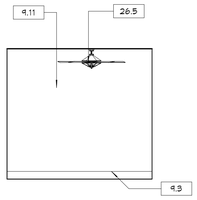

9 A8.01 BC DORM 105 - (South)
1/4" = 1'-0"

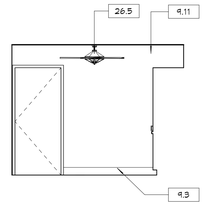

10 A8.01 BC DORM 105 - (West)
1/4" = 1'-0"

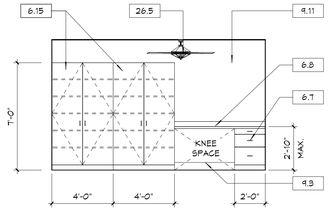

11 A8.01 BC DORM 105 - (North)
1/4" = 1'-0"

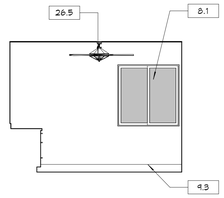

12 A8.01 BC DORM 105 - (East)
1/4" = 1'-0"

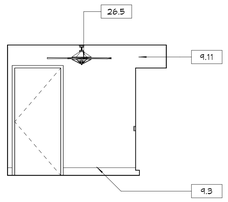

13 A8.01 BC DORM 106 - (West)
1/4" = 1'-0"

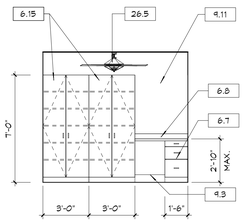

14 A8.01 BC DORM 106 - (North)
1/4" = 1'-0"

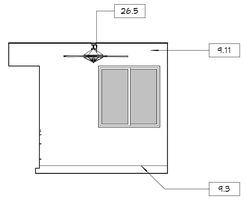

15 A8.01 BC DORM 106 - (East)
1/4" = 1'-0"

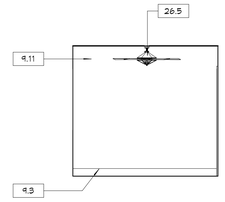

16 A8.01 BC DORM 106 (South)
1/4" = 1'-0"

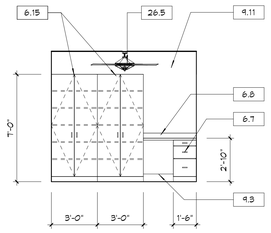

17 A8.01 BC DORM 107 - (North)
1/4" = 1'-0"

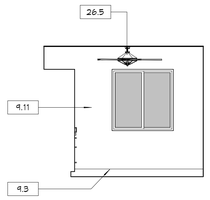

18 A8.01 BC DORM 107 - (East)
1/4" = 1'-0"

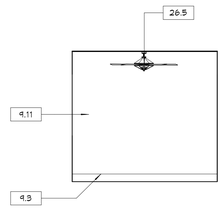

19 A8.01 BC DORM 107 - (South)
1/4" = 1'-0"

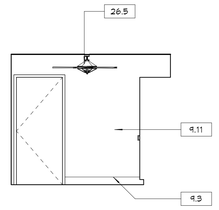

20 A8.01 BC DORM 107 - (West)
1/4" = 1'-0"

GENERAL - NOTES

1. UNLESS OTHERWISE NOTED OR INDICATED, ALL DIMENSIONS SHOWN ARE TO FACE OF FRAMING, CONC. SLAB AND/OR CMU.
2. CONTRACTOR SHALL WORK TOWARD DIMENSIONS WITH TOLERANCES +/- SHOWN.
3. PROVIDE ADEQUATE BLOCKING IN WALLS FOR CABINETS AND OTHER WALL MOUNTED ACCESSORIES INCLUDING BUT NOT LIMITED TO HANDRAILS, SHELVING, TV SUPPORT BRACKETS, BULLETING BOARDS, MARKER BOARDS AND BATHROOM FIXTURES.
4. PROVIDE FIRE BLOCKING EVERY 10'-0" VERTICALLY & HORIZONTALLY AT CONCEALED SPACES, WALLS, PARTITIONS, CEILINGS AND INTERSECTIONS - TYP.
5. CONTRACTOR TO PROVIDE SHEATHING ON THE INTERIOR SIDE OF ALL WALLS WHERE STRUCTURAL SHEATHING OCCURS TO PROVIDE A CONTINUOUS AND FLUSH WALL SURFACE FOR THE ENTIRE WALL.
6. ALL INTERIOR DOORS SHALL HAVE MIN. 18" WIDTH CLEARANCE ON THE SIDE TO WHICH THE DOOR SWINGS FROM THE STRIKE EDGE OF THE DOOR.
7. ALL EXTERIOR DOORS SHALL HAVE MIN. 24" WIDTH LEVEL AREA ON THE SIDE TO WHICH THE DOOR SWINGS FROM THE STRIKE EDGE OF THE DOOR.
8. EQUIPMENT IS PER OWNER UNLESS OTHERWISE NOTED. CONTRACTOR TO INSTALL ALL GAS, WATER, PLUMBING PER EQUIPMENT REQUIREMENTS. REFER TO OWNER FOR REQUIREMENTS.
9. MINIMUM 1/8":12 SLOPE FOR CONCRETE FLOORS WHERE FLOOR DRAIN OCCURS.
10. PROVIDE TACTILE EXIT SIGNS AT EACH EXIT PER 2010 CBC 1011.3.
11. REFER TO SHEET AG4.00 ACCESSIBILITY STANDARDS AND G4.10 ACCESSIBILITY DETAILS FOR ADDITIONAL INFORMATION AND TYPICAL ACCESSIBLE DETAILS.
12. REFER TO ROOM FINISH PLAN FOR ALL FINISH DESIGNATIONS.
13. REFER TO STRUCTURAL DWGS. FOR LOCATIONS AND EXTENT OF CONCRETE CURB AT INTERIOR WALLS.

KEYNOTES

6.6	P. LAM FACED UPPER CABINET W/ DOORS AND ADJUSTABLE SHELVES
6.7	P. LAM FACED BASE CABINET W/ DRAWERS
6.8	SOLID SURFACE COUNTERTOP W/ 4" BACKSPLASH TOP @ 2'-10" A.F.F. MAX.
6.9	SOLID SURFACE COUNTERTOP TOP @ 2'-10" A.F.F. MAX.
6.15	P. LAM. FACED FULL HEIGHT CABINET W/ DOORS & ADJUSTABLE SHELVES
6.16	P. LAM. FACED UPPER CABINET W/ DOORS & OPEN SHELF
8.1	ALUMINUM FRAMED WINDOWS
8.8	ALUMINUM PASS-THRU WINDOW W/ 3/4" GLAZING
8.9	HOLLOW METAL DOOR - REFER TO DOOR SCHEDULE
9.3	6" HIGH CARPET TILE BASE W/ SCHLUTER TOP, SEE SCHEDULE
9.4	6" HIGH RUBBER BASE, SEE SCHEDULE
9.11	5/8" TYPE 'X' GYPSUM BOARD, PAINTED, SEE SCHEDULE
9.12	5/8" TYPE 'X' GYPSUM BOARD, PAINTED, SEMI-GLOSS, SEE SCHEDULE
26.5	CEILING FAN WITH LIGHT FIXTURE S.E.D.

LDA DESIGNERS & ARCHITECTS

Architect:
LDA Partners, Inc.
Designers & Architects
222 Central Court
Stockton, CA 95204
209.943.0405
www.ldapartners.com

LICENSED ARCHITECT — R. WILLIAM WOOD — C28388 — September 2021 — STATE OF CALIFORNIA

Client:
LATHROP-MANTECA FIRE PROTECTION DISTRICT
19001 SOMERSTON PARKWAY
LATHROP, CA 95330
209.941.5102

Project:
FIRE STATION 31 UPGRADES

800 J STREET
LATHROP CA 95330

Project No.: 757-01-20
Drawn By: A.C.
Checked By: E.W.

No.	Description	Date	By
2	PLAN CHECK #2/ADDENDA #1	12-9-2020	

3RD SUBMITTAL - BLDG. DEPT.

12/9/2020

INTERIOR ELEVATIONS

A8.01

12/9/2020 8:38:18 PM

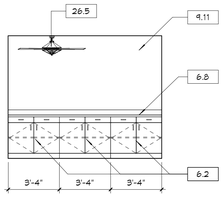

1 A8.02 DAY ROOM - (North)
1/4" = 1'-0"

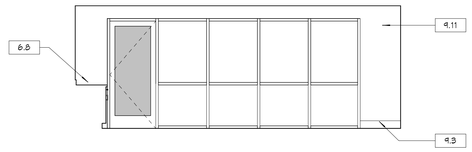

2 A8.02 DAY ROOM - (East)
1/4" = 1'-0"

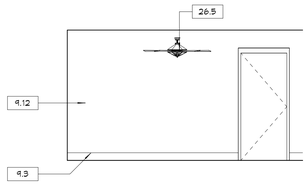

3 A8.02 DAY ROOM - (South)
1/4" = 1'-0"

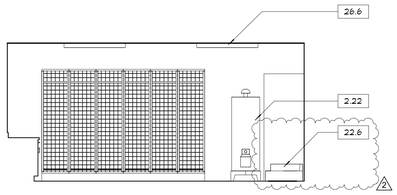

5 A8.02 TURN OUT/JANITOR'S RM. - (North)
1/4" = 1'-0"

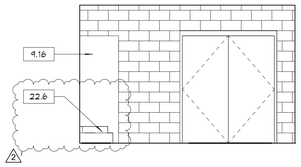

6 A8.02 TURN OUT/JANITOR'S RM. - (East)
1/4" = 1'-0"

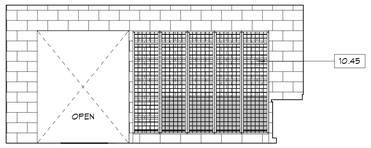

7 A8.02 TURN OUT/JANITOR'S RM. - (South)
1/4" = 1'-0"

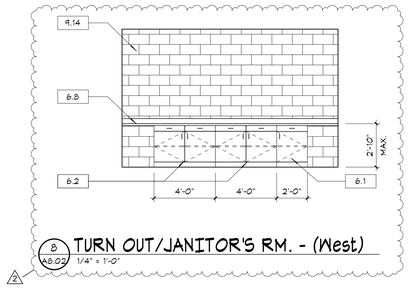

8 A8.02 TURN OUT/JANITOR'S RM. - (West)
1/4" = 1'-0"

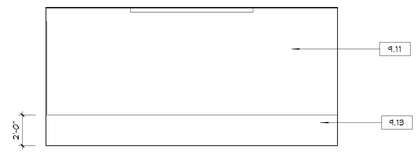

9 A8.02 EXERCISE RM. - (North)
1/4" = 1'-0"

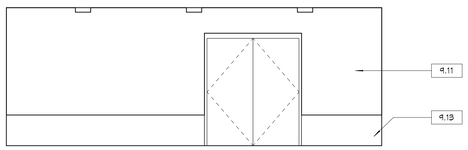

10 A8.02 EXERCISE RM. - (East)
1/4" = 1'-0"

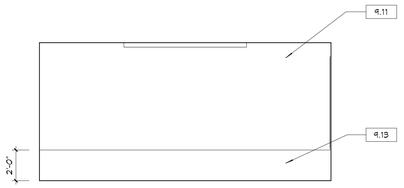

11 A8.02 EXERCISE RM. - (South)
1/4" = 1'-0"

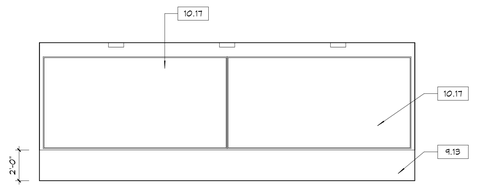

12 A8.02 EXERCISE RM. - (West)
1/4" = 1'-0"

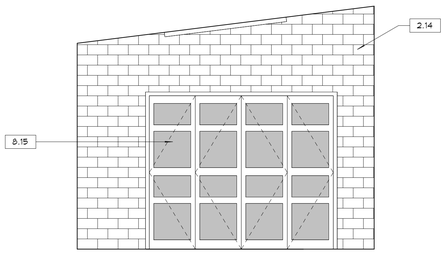

13 A8.02 SHOP BAY - (North)
1/4" = 1'-0"

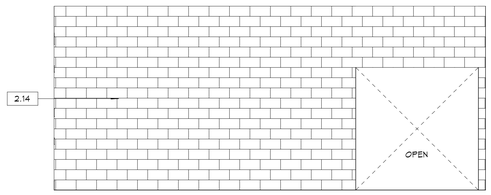

14 A8.02 SHOP BAY - (East)
1/4" = 1'-0"

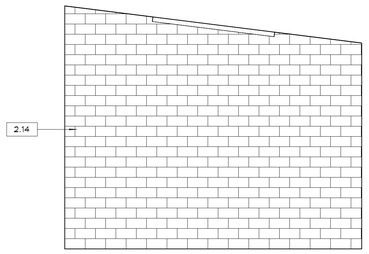

15 A8.02 SHOP BAY - (South)
1/4" = 1'-0"

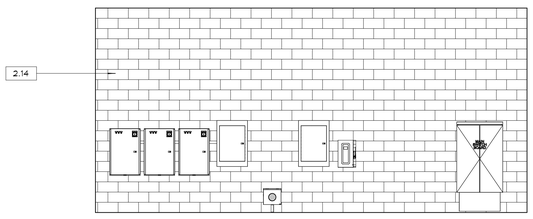

16 A8.02 SHOP BAY - (West)
1/4" = 1'-0"

GENERAL - NOTES

1. UNLESS OTHERWISE NOTED OR INDICATED, ALL DIMENSIONS SHOWN ARE TO FACE OF FRAMING, CONC. SLAB AND/OR CMU.
2. CONTRACTOR SHALL WORK TOWARD DIMENSIONS WITH TOLERANCES +/- SHOWN.
3. PROVIDE ADEQUATE BLOCKING IN WALLS FOR CABINETS AND OTHER WALL MOUNTED ACCESSORIES INCLUDING BUT NOT LIMITED TO HANDRAILS, SHELVING, TV SUPPORT BRACKETS, BULLETING BOARDS, MARKER BOARDS AND BATHROOM FIXTURES.
4. PROVIDE FIRE BLOCKING EVERY 10'-0" VERTICALLY & HORIZONTALLY AT CONCEALED SPACES, WALLS, PARTITIONS, CEILINGS AND INTERSECTIONS - TYP.
5. CONTRACTOR TO PROVIDE SHEATHING ON THE INTERIOR SIDE OF ALL WALLS WHERE STRUCTURAL SHEATHING OCCURS TO PROVIDE A CONTINUOUS AND FLUSH WALL SURFACE FOR THE ENTIRE WALL.
6. ALL INTERIOR DOORS SHALL HAVE MIN. 18" WIDTH CLEARANCE ON THE SIDE TO WHICH THE DOOR SWINGS FROM THE STRIKE EDGE OF THE DOOR.
7. ALL EXTERIOR DOORS SHALL HAVE MIN. 24" WIDTH LEVEL AREA ON THE SIDE TO WHICH THE DOOR SWINGS FROM THE STRIKE EDGE OF THE DOOR.
8. EQUIPMENT IS PER OWNER UNLESS OTHERWISE NOTED. CONTRACTOR TO INSTALL ALL GAS, WATER, PLUMBING PER EQUIPMENT REQUIREMENTS. REFER TO OWNER FOR REQUIREMENTS.
9. MINIMUM 1/8":12 SLOPE FOR CONCRETE FLOORS WHERE FLOOR DRAIN OCCURS.
10. PROVIDE TACTILE EXIT SIGNS AT EACH EXIT PER 2010 CBC 1011.3.
11. REFER TO SHEET AG4.00 ACCESSIBILITY O STANDARDS AND G4.10 ACCESSIBILITY DETAILS FOR ADDITIONAL INFORMATION AND TYPICAL ACCESSIBLE DETAILS.
12. REFER TO ROOM FINISH PLAN FOR ALL FINISH DESIGNATIONS
13. REFER TO STRUCTURAL DWGS. FOR LOCATIONS AND EXTENT OF CONCRETE CURB AT INTERIOR WALLS.

KEYNOTES

2.14	EXISTING CMU WALL TO REMAIN, NEW PAINTING TO MATCH (E)
2.22	RELOCATE & RE-USE EXISTING WATER HEATER
6.1	P. LAM FACED BASE CABINET w/ DRAWER, DOOR & ADJUSTABLE SHELF
6.2	P. LAM FACED BASE CABINET w/ DRAWERS, DOORS & ADJUSTABLE SHELF
6.8	SOLID SURFACE COUNTERTOP w/ 4" BACKSPLASH TOP @ 2'-10" A.F.F. MAX.
8.15	10' x 12' BI-FOLDING DOOR SEE DOOR SCHEDULE
9.3	6" HIGH CARPET TILE BASE w/ SCHLUTER TOP, SEE SCHEDULE
9.11	5/8" TYPE 'X' GYPSUM BOARD, PAINTED, SEE SCHEDULE
9.12	5/8" TYPE 'X' GYPSUM BOARD, PAINTED, SEMI-GLOSS, SEE SCHEDULE
9.13	RUBBER FLOORING CONTINUE UP TO 2FT OF WALL
9.14	(E) CMU WALL, CLEAN AND PAINTED TO MATCH (E)
9.16	FRP - FIBER REINFORCE PANEL
10.17	WALL MOUNTED MIRROR, 2'-0" ABOVE RUBBER FLOORING
10.45	24"x24" WALL MOUNT FIRE LOCKERS, TYP.
22.6	FLOOR MOUNT UTLITY SINK, S.P.D.
26.5	CEILING FAN WITH LIGHT FIXTURE S.E.D.
26.6	SURFACE MOUNT LIGHT FIXTURE S.E.D.

LDA
DESIGNERS & ARCHITECTS

Architect:
LDA Partners, Inc.
Designers & Architects
222 Central Court
Stockton, CA 95204
209.943.0405
www.ldapartners.com

LICENSED ARCHITECT
JR WILLIAM WEIR
C28388
September 2021
STATE OF CALIFORNIA

Client:
LATHROP-MANTECA FIRE PROTECTION DISTRICT
19001 SOMERSTON PARKWAY
LATHROP, CA 95330
209.941.5102

Project:
FIRE STATION 31 UPGRADES

800 J STREET
LATHROP CA 95330

Project No.: 757-01-20
Drawn By: A.C.
Checked By: E.W.

No.	Description	Date	By
2	PLAN CHECK #2/ADDENDA #1	12-9-2020	

3RD SUBMITTAL - BLDG. DEPT.

12/9/2020

INTERIOR ELEVATIONS

A8.02

12/9/2020 8:47:31 PM

FINISH MATERIALS SCHEDULE

FINISHES	DESIGNATION	MATERIAL	MFR/PRODUCT	STYLE/COLOR	COMMENTS
CASEWORK					
CASEWORK	PL-1	PLASTIC LAMINATE	FORMICA /WILSONART	TBD	
CASEWORK	PL-2	PLASTIC LAMINATE	FORMICA /WILSONART	TBD	
CASEWORK	PL-3	PLASTIC LAMINATE	FORMICA /WILSONART	TBD	
CASEWORK	SS-1	SOLID SURFACE	CORIAN / FORMICA	TBD	
CASEWORK	SS-2	SOLID SURFACE	CORIAN / FORMICA	TBD	
CEILING					
CEILING	ACT	ACOUSTICAL CEILING TILE	PER ADDENDA		
CEILING	GLG-1	GYPSUM BOARD TYPE 'X'	PER ADDENDA	PAINTED	
CEILING	GLG-2	GYPSUM BOARD TYPE 'X'	PER ADDENDA	PAINTED	
FLOOR					
FLOOR	CC	COLORED CONCRETE			
FLOOR	CPT-1	CARPET TILES	MILLIKEN	PER ADDENDA	
FLOOR	EP-1	EPOXY RESINOUS FLOORING	DUR-A-FLEX / MARCO CHIP BLEND	PER ADDENDA	NON-SLIP EPOXY COATED
FLOOR	SC-1	EXPOSED AND SEALED CONCRETE SLAB - SMOOTH FINISH	SCOFIELD	PER ADDENDA	
FLOOR	SDT-1	STATIC DISSIPATED TILE	FORBO FLOORING	MOONSTONE SD - 150206	I.T. ROOM ONLY
FLOOR	SPT-1	RUBBER SPORTS FLOORING	MONDO	TBD	
WALL					
WALL	P-1	GYPSUM BOARD / PAINTED	BENJAMIN MOORE	TEXTURED/EGGSHELL	
WALL	P-2	GYPSUM BOARD / PAINTED SEMI-GLOSS	BENJAMIN MOORE	TEXTURED/EGGSHELL	
WALL	P-3	(E) CMU WALL / CLEAN & PAINTED	BENJAMIN MOORE	TEXTURED/EGGSHELL	
WALL	P-4	MOISTURE RESISTANT GYP. BD. / PAINTED	TBD BY OWNER	TEXTURED/EGGSHELL	
WALL BASE					
WALL BASE	EPB-1	6" EPOXY RESINOUS BASE	DUR-A-FLEX / MARCO CHIP BLEND	PER ADDENDA	
WALL BASE	RB-2	6" RUBBER BASE	BURKE	"PROFILES" SERIES - "CONTEMPORARY"	
WALL BASE	RB-3	6" CARPET TILE BASE W/ SCHLUTER EDGE	J&J COMMERCIAL	PER ADDENDA	

ROOM FINISH SCHEDULE

NO	ROOM NAME	FLOOR	BASE	BASE CABINET	COUNTER TOP	UPPER CABINET	WALL	CEILING	CEILING HEIGHT	COMMENTS
100	APPARATUS BAY	SC-1	EC				P-3	GLG-2	+/- 18'-0"	
101	LOBBY	CC	RB-2	FL-2	SS-1		P-1	ACT	9'-0"	
102	CREW OFFICE	CC	RB-2	FL-3	SS-3	PL-1	P-1	ACT	8'-6"	
103	CAPT. OFFICE/DORM.	CPT-1	RB-3	FL-3	SS-3		P-1	ACT	8'-6"	
104	I.T.	SDT-1	RB-2				P-1	GLG-1	8'-6"	
105	BC DORM	CPT-1	RB-3	FL-3	SS-3		P-1	ACT	8'-6"	
106	BC DORM	CPT-1	RB-3	FL-3	SS-3		P-1	ACT	8'-6"	
107	BC DORM	CPT-1	RB-3	FL-3	SS-3		P-1	ACT	8'-6"	
108	DAY ROOM	CPT-1	RB-3	FL-3	SS-3		P-1	GLG-1	8'-6"	
109	HALLWAY	CC	RB-2				P-1	ACT	8'-6"	
110	RESTROOM-1	CC/EP-1	EPB-1	FL-1	SS-1		P-4	GLG-1	8'-0"	ACRYLIC SURROUND AT SHOWER FULL HEIGHT 3 WALLS & EPOXY FLOORING
111	RESTROOM-2	CC/EP-1	EPB-1	FL-1	SS-1		P-4	GLG-1	8'-0"	ACRYLIC SURROUND AT SHOWER FULL HEIGHT 3 WALLS & EPOXY FLOORING
112	KITCHEN	CC	RB-2	FL-1	SS-2	FL-2	P-2	GLG-1/P-2	8'-6"	
113	DINING AREA	CC	RB-2				P-2	GLG-1	8'-6"	
114	SHOP BAY	SC-1	RB-2				P-3	GLG-2	VARIES	
115	EXERCISE RM	SPT-1	SPT-1				P-1	GLG-2	9'-0"	RUBBER SPORT FLOORING CONTINUE UP TO 2FT OF WALL
116	TURNOUT RM.	EP-1	EPB-1				P-3	GLG-2	12'-6"	WALLS TO BE SEALED & PAINTED, FRP AT MOP SINK, SEE INT. ELEV.
117	TOWER	SC-1	RB-2				P-3	GLG-2	V.I.F.	

LEGEND

SC-1 - EXPOSED AND SEALED CONCRETE SLAB - SMOOTH TROWEL FINISH (2)

CC - STAINED/POLISHED CONCRETE (2)

CPT-1 - CARPET TILES

RB-1 - RUBBER FLOORING

SDT-1 - STATIC DISSIPATED TILE

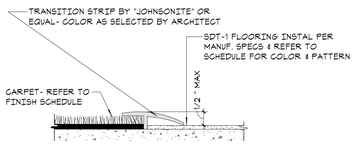

CARPET TO VINYL

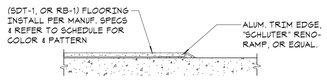

VINYL TO CONCRETE

1 A9.00 FLOOR TRANSITIONS
6" = 1'-0"

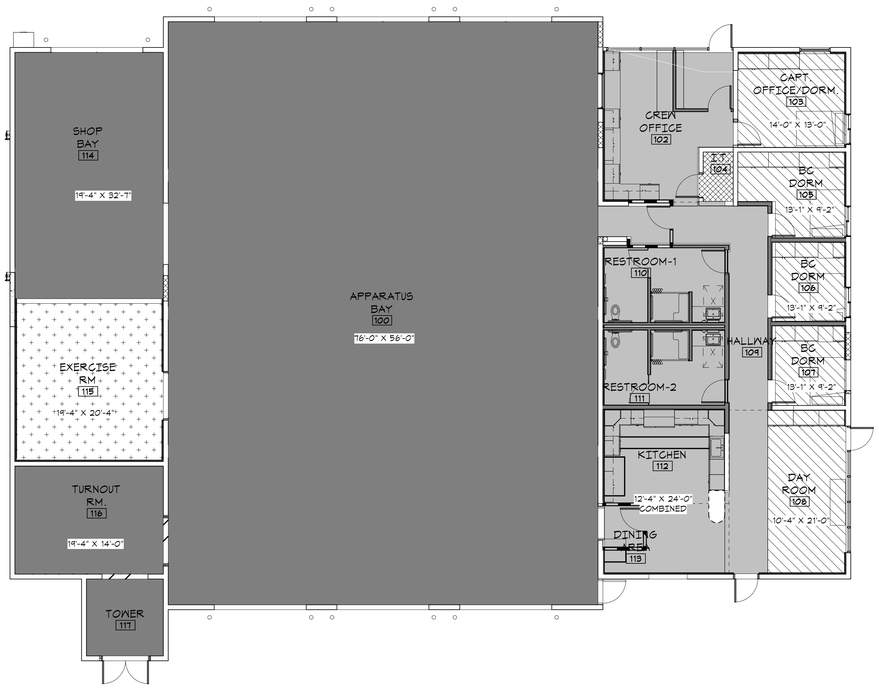

2 A9.00 FINISH FLOOR PLAN
1/8" = 1'-0"

GENERAL NOTES

CASEWORK

1. ALL CASEWORK TO FOLLOW ANS GUIDELINES.
2. ALL LAMINATE PATTERN TO RUN ***HORIZONTALLY*** UNLESS OTHERWISE NOTED.
3. ALL SOLID SURFACING TO HAVE SQUARE EDGING.
4. ALL OPEN CASEWORK TO HAVE MATCHING LAMINATE AS EXTERIOR FACING.
5. ALL INTERIOR CASEWORK MELAMINE TO BE WHITE.
6. CONTRACTOR TO MEET OR EXCEED NAAWS 3.0 CUSTOM OR PREMIUM GRADE STANDARDS

INTERIOR

1. ALL GYPSUM BOARD WALLS AND CEILINGS TO BE LEVEL 4 FINISH, UNLESS OTHERWISE NOTED.
2. ALL GYPSUM BOARD WALLS AND CEILINGS TO BE PAINTED P-1, UNLESS OTHERWISE NOTED.
3. REFER TO ROOM FINISHES PLAN FOR FLOORING PATTERNS, WHERE OCCURS

LDA
DESIGNERS & ARCHITECTS

Architect:
LDA Partners, Inc.
Designers & Architects
222 Central Court
Stockton, CA 95204
209.943.0405
www.ldapartners.com

LICENSED ARCHITECT
JEFFREY WILLIAM WOOD
C28388
September 2021
STATE OF CALIFORNIA

Client:
LATHROP-MANTECA FIRE PROTECTION DISTRICT
19001 SOMERSTON PARKWAY
LATHROP, CA 95330
209.941.5102

Project:
FIRE STATION 31 UPGRADES

800 J STREET
LATHROP CA 95330

Project No.: 757-01-20
Drawn By: Author
Checked By: Checker

No.	Description	Date	By
2	PLAN CHECK #2/ADDENDA #1	12-9-2020	

3RD SUBMITTAL - BLDG. DEPT.

12/9/2020

ROOM FINISH SCHEDULE

A9.00

PLOT: 12/9/2020 8:37:17 AM

DOOR SCHEDULE

NO.	TYPE	PANEL: DOOR W-1	DOOR W-2	HEIGHT	THICKNESS	CORE	FINISH/COLOR	FRAME	DETAILS: HEAD	JAMB	THRESHOLD / SILL	MULLION	FIRE RATING	HDWR. GROUP	COMMENTS
100A		6' - 0"	6' - 0"	14' - 0"	1 1/2"	STEEL/GLASS	FACTORY FINISH		9/AD.02					PER MANUF.	DOOR OPERATOR ON WEST JAMB, POWER OPERATED/FRAME COLORS PER OWNER
100B		6' - 0"	6' - 0"	14' - 0"	1 1/2"	STEEL/GLASS	FACTORY FINISH		9/AD.02					PER MANUF.	DOOR OPERATOR ON WEST JAMB, POWER OPERATED/FRAME COLORS PER OWNER
100C		6' - 0"	6' - 0"	14' - 0"	1 1/2"	STEEL/GLASS	FACTORY FINISH		9/AD.02					PER MANUF.	DOOR OPERATOR ON WEST JAMB, POWER OPERATED/FRAME COLORS PER OWNER
100D		6' - 0"	6' - 0"	14' - 0"	1"	STEEL/INSULATED	FACTORY FINISH		8/AD.02					PER MANUF.	DOOR OPERATOR ON EAST JAMB, POWER OPERATED
100E		6' - 0"	6' - 0"	14' - 0"	1"	STEEL/INSULATED	FACTORY FINISH		8/AD.02					PER MANUF.	DOOR OPERATOR ON EAST JAMB, POWER OPERATED
100F		6' - 0"	6' - 0"	14' - 0"	1"	STEEL/INSULATED	FACTORY FINISH		8/AD.02					PER MANUF.	DOOR OPERATOR ON EAST JAMB, POWER OPERATED
100G	H	3' - 0"		7' - 0"	1 3/4"	H.M.	PRIME & PAINT	H.M.	7/AD.02	7/AD.02	23/AD.02			8	WITH VISION LITE ; NO CLOSER
101	A	3' - 0"		7' - 0"	1 3/4"	SF		SF			5/AD.02			10	STOREFRONT DOOR
102	C	3' - 0"		7' - 0"	1 3/4"	WD		ALUM.	11/AD.02	11/AD.02				1	
103	C	3' - 0"		7' - 0"	1 3/4"	WD		ALUM.	11/AD.02	11/AD.02				2	
104	C	3' - 0"		7' - 0"	1 3/4"	WD		ALUM.	11/AD.02	11/AD.02				3	
105	C	3' - 0"		7' - 0"	1 3/4"	WD		ALUM.	11/AD.02	11/AD.02				4	
106	C	3' - 0"		7' - 0"	1 3/4"	WD		ALUM.	11/AD.02	11/AD.02				4	
107	C	3' - 0"		7' - 0"	1 3/4"	WD		ALUM.	11/AD.02	11/AD.02				4	
108A	D	3' - 0"		7' - 0"	1 3/4"	H.M.		H.M.	7/AD.02	7/AD.02	23/AD.02			5	
108B	A	3' - 0"		7' - 0"	1 3/4"	SF		SF			5/AD.02			10	STOREFRONT DOOR
109	C	3' - 0"		7' - 0"	1 3/4"	H.M.		H.M.	11/AD.02	11/AD.02	23/AD.02		45 MIN.	6	
110	C	3' - 0"		7' - 0"	1 3/4"	WD		ALUM.	11/AD.02	11/AD.02				7	
111	C	3' - 0"		7' - 0"	1 3/4"	WD		ALUM.	11/AD.02	11/AD.02				7	
113	C	3' - 0"		7' - 0"	1 3/4"	H.M.		H.M.	11/AD.02	11/AD.02	23/AD.02		45 MIN.	6	
114	B	6' - 0"	6' - 0"	10' - 0"	1 1/2"	STEEL/GLASS	FACTORY FINISH	STEEL	9/AD.02					PER MANUF.	DOOR OPERATOR ON WEST JAMB, POWER OPERATED/ FRAME COLOR PER OWNER
115	C	3' - 0"	3' - 0"	7' - 0"	1 3/4"	H.M.		H.M.	24/AD.02	24/AD.02				9	
116	C	3' - 0"	3' - 0"	7' - 0"	1 3/4"	H.M.		H.M.	24/AD.02	24/AD.02				9	
117	C	3' - 0"	3' - 0"	7' - 0"	1 3/4"	H.M.		H.M.	7/AD.02	7/AD.02	23/AD.02			11	
120	I	3' - 0"		7' - 10"	1 3/4"	H.M.		H.M.	7/AD.02	7/AD.02	23/AD.02			4	DOOR AT GENERATOR ENCLOSURE

2

CODE = MANUFACTURER
VON = VON DUPRIN
HAG = HAGER
TR = TRIMCO
SCG = SCHLAGE
SCE = SCHLAGE ELECTRONICS
LCN = LCN
IVES = IVES
AL = ALTRONICS
PEM = PEMKO

NOTES:
- MOUNT HARDWARE 2'-10" TO 3'-8" A.F.F. PER 2013 CBC 1008.1.9.2
- PUSH-PULL HANDLES AND CLOSERS TO BE SINGLE-ACTION ACTIVATED WITH 5 LBS PRESSURE MAXIMUM. FIRE-RATED DOORS EXCLUDED.

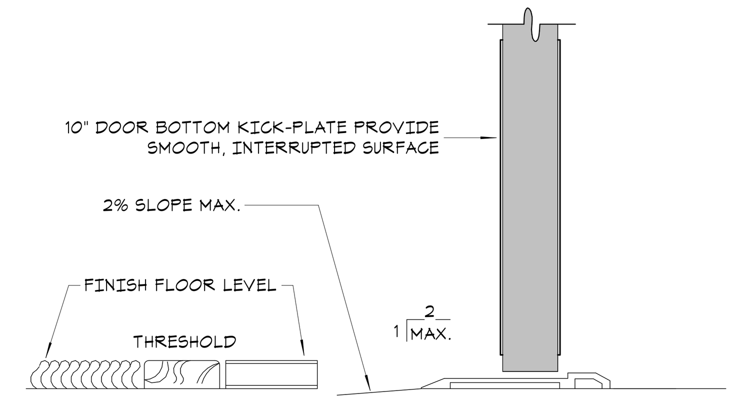

1 A9.01 THRESHOLDS
3" = 1'-0"

GENERAL NOTES

1. FURNISH & INSTALL A READILY VISIBLE, DURABLE SIGN ABOVE EXITY DOORS STATING "THIS DOOR MUST REMAIN UNLOCKED DURING BUSINESS HOURS". THE SIGN SHALL BE IN LETTERS NOT LESS THAN 1 INCH HIGH ON A CONTRASTING BACKGROUND. WHEN UNLOCKED, THE EXIT DOOR(S) MUST BE FREE TO SWING WITHOUT OPERATION OF ANY LATCHING DEVICE.
2. THE FINISH OF ALL ALUMINUM STOREFRONT DOOR FRAMES SHALL BE CLEAR ANODIZED, U.O.N.
3. STOREFRONT DOOR LOCKS SHALL BE FURNISHED WITH A 3/4"" HOOK OR EXPANDING BOLT TO COMPLY WITH FIRE DEPARTMENT REQUIREMENTS.
4. REFER TO STOREFRONT SCHEDULE FOR GLASS TYPES. REFER TO SHEET G3.00 & G3.01 FOR ACCESSIBILITY NOTES & DETAILS.

DOOR HARDWARE SCHEDULE

Group 1
Door 102

3 HINGES	5BB1 HW 4 1/2 x 4 1/2	US32D	IVES
1 CLASSROOM LOCKSET	ND70 JD-RHO	626	SCHLAGE
1 CYLINDER IC CORE	20-740, LEVEL 3	626	SCHLAGE
1 WALL STOP	WS404/407CVX	US15	IVES
3 SILENCER	SR64	BLK	IVES

Group 2
Door 103

3 HINGES	5BB1 HW 4 1/2 x 4 1/2	US15	IVES
1 OFFICE LOCKSET	ND53 JD-RHO	626	SCHLAGE
1 CYLINDER IC CORE	20-740	626	SCHLAGE
1 WALL STOP	WS404/407CVX	US15	IVES
3 SILENCER	SR64	BLK	IVES

Group 3
Door 104

1 CARD READER	MT15-485	BLACK	SCHLAGE
1 POWER SUPPLY (BATTERY BACK-UP)	PROVIDED BY ELECTRICAL ENGINEER		
1 ELECTRIC STRIKE	5000 SERIES	630	HES
3 HINGES	5BB1 HW 4 1/2 x 4 1/2	US15	IVES
1 STOREROOM LOCKSET	ND80 JD-RHO	626	SCHLAGE
1 CYLINDER IC CORE	20-740	626	SCHLAGE
1 CLOSER	4050A-72MC (PULL SIDE)	695	LCN
1 WALL STOP	WS404/407CVX	US15	IVES
3 SILENCER	SR64	BLK	IVES

Group 4
Door 105, 106, 107

3 HINGES	5BB1 HW 4 1/2 x 4 1/2	US15	IVES
1 BED/PRIVACY LOCKSET	ND40 JD-RHO	626	SCHLAGE
1 WALL STOP	WS404/407CVX	US15	IVES
3 SILENCER	SR64	BLK	IVES

Group 5
Door 108A

1 CARD READER	MT15-485	BLACK	SCHLAGE
1 POWER SUPPLY (BATTERY BACK-UP)	PROVIDED BY ELECTRICAL ENGINEER		
3 HINGES	5BB1 HW 4 1/2 x 4 1/2 NRP	US32D	IVES
1 ELECTRIC STRIKE	5000 SERIES	630	HES
1 STOREROOM LOCKSET	ND80 JD-RHO	630	SCHLAGE
1 CYLINDER IC CORE	20-740	630	SCHLAGE
1 CLOSER	4050A-72MC (PUSH SIDE)	695	LCN
1 FLOOR STOP	FS18S	BLACK	IVES
1 WEATHER STRIP	S88 GR 17'	DARK BRONZE	PEMKO
1 SWEEP	2251 V	DARK BRONZE ANODIZED ALUMINUM	PEMKO
1 THRESHOLD	172 A 36"	DARK BRONZE ANODIZED ALUMINUM	PEMKO

Group 6
Door 109, 113

3 HINGES	5BB1 HW 4 1/2 x 4 1/2	US15	IVES
1 PANIC DEVICE	AX-99-NL	313	VON DUPRIN
1 PASSAGE LATCHSET	ND10S-RHO	630	SCHLAGE
1 CLOSER	4050A-72MC (PUSH SIDE)	695	LCN
1 WALL STOP	WS404/407CVX	US15	IVES
1 WEATHER STRIP	S88 GR 17'	DARK BRONZE	PEMKO
1 SWEEP	2251 V	DARK BRONZE ANODIZED ALUMINUM	PEMKO
1 THRESHOLD	158 72"	DARK BRONZE ANODIZED ALUMINUM	PEMKO

Group 7
Door 110,111

3 HINGES	5BB1 HW 4 1/2 x 4 1/2	US15	IVES
1 PUSH PLATE	8200 4 x 16	US15	IVES
1 PULL PLATE	8302-8 4 x 16	US15	IVES
1 CLOSER	4011 REG	695	LCN
2 MOP PLATE	8400 6" x 2" less width	US32D	IVES
1 WALL STOP	WS404/407CVX	US15	IVES
3 SILENCER	SR64	BLK	IVES

Group 8
Door 100G

1 OPERATOR	9542	689	LCN
1 PUSH PLATE ACTIVIATOR	8310-853TWP	689	LCN
1 CARD READER	MT15-485	BLACK	SCHLAGE
1 POWER SUPPLY (BATTERY BACK-UP)	PROVIDED BY ELECTRICAL ENGINEER		
3 HINGES	5BB1 HW 4 1/2 x 4 1/2 NRP	US32D	IVES
1 ELECTRIC STRIKE	5000 SERIES	626	HES
1 STOREROOM LOCKSET	ND80 JD-RHO	626	SCHLAGE
1 CYLINDER IC CORE	20-740	626	SCHLAGE
1 CLOSER	4050A-72MC (PUSH SIDE)	695	LCN
1 FLOOR STOP	FS18S	BLACK	IVES
1 WEATHER STRIP	S88 GR 17'	DARK BRONZE	PEMKO
1 SWEEP	2251 V	DARK BRONZE ANODIZED ALUMINUM	PEMKO
1 THRESHOLD	172 A 36"	DARK BRONZE ANODIZED ALUMINUM	PEMKO

Group 9
Door 115,116

6 HINGES	5BB1 HW 4 1/2 x 4 1/2	US15	IVES
1 FLUSH BOLT	FB458	US15	IVES
1 DUST PROOF STRIKE	DP1	US15	IVES
1 PASSAGE LATCHSET	ND10S-RHO	626	SCHLAGE
2 WALL STOP	WS404/407CVX	US20A	IVES
1 WEATHER STRIP	S88 GR 17'	DARK BRONZE	PEMKO
1 SWEEP	2251 V	DARK BRONZE ANODIZED ALUMINUM	PEMKO
1 THRESHOLD	158 72"	DARK BRONZE ANODIZED ALUMINUM	PEMKO

2

Group 10
Door 101, 108B

1 CARD READER	MT15-485	BLACK	SCHLAGE
1 POWER SUPPLY (BATTERY BACK-UP)	PROVIDED BY ELECTRICAL ENGINEER		
2 PIVOT SET	7215 SET	313AN	IVES
1 INTERMEDIATE PIVOT	7215 INT	313AN	IVES
1 ELECTRIC STRIKE	5000 SERIES	630	HES
1 PANIC DEVICE	EL9947NL-OP	313	VON DUPRIN
1 RIM CYLINDER HOUSING	20-057-ICX	710	SCHLAGE
1 CYLINDER IC CORE	20-740, LEVEL 3	710	SCHLAGE
2 PULL	RM1230 32" long	US20A	ROCKWOOD
2 SURFACE CLOSER	4050A-72MC (PUSH SIDE)	695	LCN
2 FLOOR STOP	FS18S	BLACK	IVES
2 WEATHER STRIP	S88 GR 17'	DARK BRONZE	PEMKO
2 SWEEP	2251 V	DARK BRONZE ANODIZED ALUMINUM	PEMKO
1 THRESHOLD	158 72"	DARK BRONZE ANODIZED ALUMINUM	PEMKO

Group 11
Door 117

1 CARD READER	MT15-485	BLACK	SCHLAGE
1 POWER SUPPLY (BATTERY BACK-UP)	PROVIDED BY ELECTRICAL ENGINEER		
6 HINGES	5BB1 HW 4 1/2 x 4 1/2	US32D	IVES
1 ELECTRIFIED HINGE	5BB1 HW 4 1/2 x 4 1/2 PW4	US32D	IVES
1 FLUSH BOLT	FB458	US32D	IVES
1 DUST PROOF STRIKE	DP1	US32D	IVES
1 STOREROOM LOCKSET	ND80 JD-EU-TLR	626	SCHLAGE
1 CYLINDER IC CORE	20-740, LEVEL 3	626	SCHLAGE
1 CLOSER	4050A-72MC (PULL SIDE)	695	LCN
2 FLOOR STOP	FS18S	BLACK	IVES
2 WEATHER STRIP	S88 GR 17'	DARK BRONZE	PEMKO
2 SWEEP	2251 V	DARK BRONZE ANODIZED ALUMINUM	PEMKO
1 THRESHOLD	158 72"	DARK BRONZE ANODIZED ALUMINUM	PEMKO

12/9/2020 8:47:17 PM

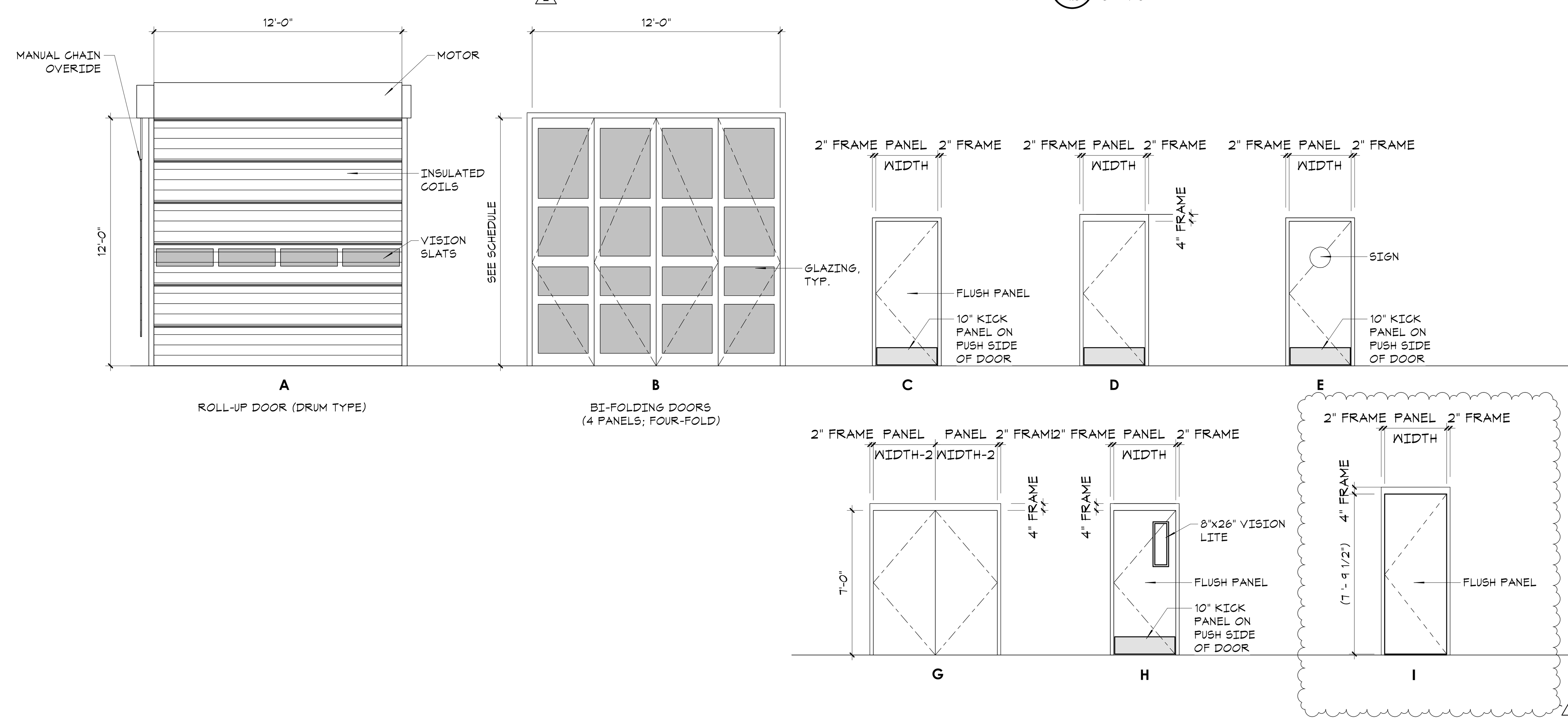

LDA - DOOR TYPES
1/4" = 1'-0"

STOREFRONT SCHEDULE

NO.	SIZE: WIDTH	HEIGHT	FRAME: MATERIAL	FINISH	DETAILS: HEAD	JAMB	SILL	COMMENTS
S-1	16' - 6"	9' - 0"	ALUM.	BRONZE	3/AD.02	3/AD.02	4/AD.02	
S-2	16' - 6"	7' - 2"	ALUM.	BRONZE	3/AD.02	3/AD.02	4/AD.02	
S-3	4' - 0"	9' - 0"	ALUM.	BRONZE	3/AD.02	3/AD.02	4/AD.02	

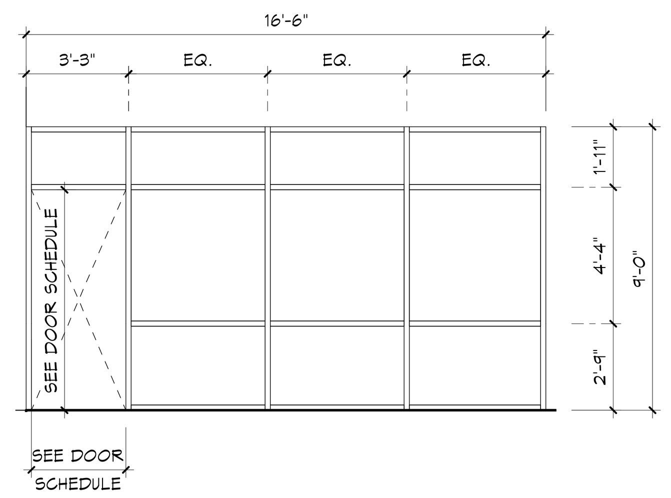

2 A9.01 STOREFRONT S-1
1/4" = 1'-0"

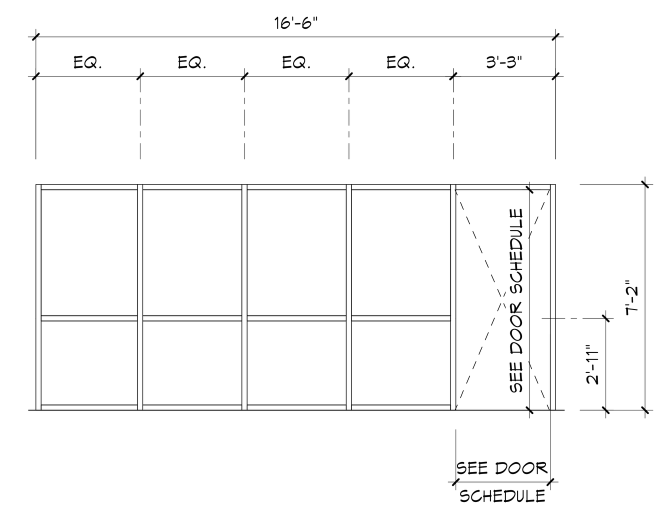

3 A9.01 STOREFRONT S-2
1/4" = 1'-0"

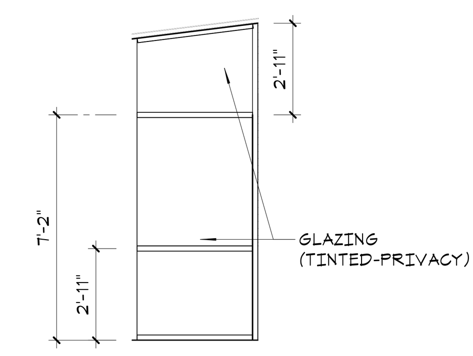

4 A9.01 STOREFRONT S-3
1/4" = 1'-0"

WINDOW SCHEDULE

TYPE	SIZE: WIDTH	HEIGHT	FRAME: MATERIAL	FINISH	GLAZING: OPERABLE	FIXED	DETAILS: HEAD	JAMB	SILL	COMMENTS
1	4' - 0"	4' - 0"	ALUM.	BRONZE	O	X	18/AD.02	18/AD.02	19/AD.02	
2	4' - 0"	4' - 0"	ALUM.	BRONZE	O	X	3/AD.02	3/AD.02	4/AD.02	
3	4' - 8"	3' - 8"	H.M.	PAINTED		X				

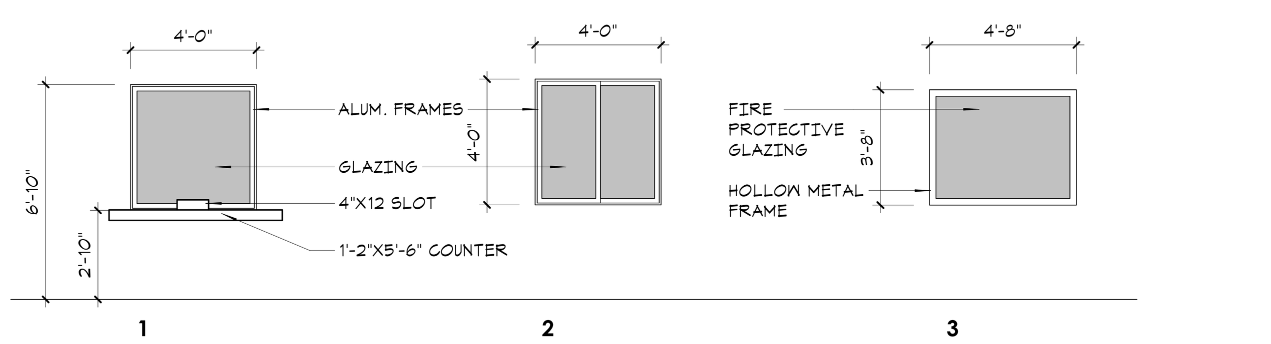

GENERAL NOTES

1. ALL GLAZING SHALL COMPLY WITH SAFETY GLAZING REQUIREMENTS OF CHAPTER 24 OF THE CALIFORNIA STATE BUILDING CODE OF REGULATIONS AND THE CONSUMER PRODUCTS SAFETY COUNCIL, THAT OCCUR IN THE FOLLOWING CONDITIONS:
   A. INGRESS AND EGRESS DOORS (EXCEPT JALOUSIES).
   B. FIXED AND SLIDING PANELS OF SLIDING DOOR ASSEMBLIES AND PANELS IN SWINGING DOORS OTHER THAN WARDROBE.
   C. FIXED OR OPERABLE PANELS ADJACENT TO A DOOR WHERE THE NEAREST EXPOSED EDGE OF THE GLAZING IS WITHIN A 24" ARC OF EITHER VERTICAL EDGE OF THE DOOR IN A CLOSED POSITION AND WHERE THE BOTTOM EXPOSED EDGE OF THE GLAZING IS LESS THAN 60" ABOVE THE WALKING SURFACE.
   D. GLAZING IN INDIVIDUAL FIXED OR OPERABLE PANEL, OTHER THAN THOSE LOCATIONS DESRIBED IN #3 ABOVE, THAT MEETS ALL THE FOLLOWING CONDITIONS:
      a. EXPOSED AREA OF AN INDIVIDUAL PANE GREATER THAN 9 S.F.
      b. EXPOSED BOTTOM EDGE LESS THAN 18" ABOVE THE FLOOR
      c. EXPOSED TOP EDGE GREATER THAN 36" ABOVE THE FLOOR
      d. ONE OR MORE WALKING SURFACES WITHIN 36" HORIZONTAL OF THE PLANE OF THE GLAZING
2. STOREFRONT ALUMINUM WINDOW FRAMES SHALL BE 2" MAX. WIDTH BY 6" DEEP MULLIONS WITH OUTSIDE GLAZED SETTING.
3. CURTAIN WALL ALUMINUM FRAMES SHALL BE 2-1/2" WIDE X 7-1/2" DEEP
4. ALL GLAZING SHALL BE 1" TEMPERED INSULATED GLASS.
5. HORIZONTAL SHALL HAVE 3" PRESSURE CAP. VERTICAL SHALL HAVE 1" PRESSURE CAP.
6. GLAZING COLOR-
   INTERIOR- 1: CLEAR
   2: LOW E
   EXTERIOR: 3: 3/4" ATLANTICA

LDA
DESIGNERS & ARCHITECTS

Architect:
LDA Partners, Inc.
Designers & Architects
222 Central Court
Stockton, CA 95204
209.943.0405
www.ldapartners.com

LICENSED ARCHITECT
ERIC WILLIAM WOHLE
C28388
September 2021
STATE OF CALIFORNIA

Client:
LATHROP-MANTECA FIRE PROTECTION DISTRICT
19001 SOMERSTON PARKWAY
LATHROP, CA 95330
209.941.5102

Project:
FIRE STATION 31 UPGRADES

800 J STREET
LATHROP CA 95330

Project No.: 757-01-20
Drawn By: Author
Checked By: Checker

No.	Description	Date	By
2	PLAN CHECK #2/ADDENDA #1	12-9-2020	

3RD SUBMITTAL - BLDG. DEPT.

12/9/2020

DOOR SCHEDULE

A9.01

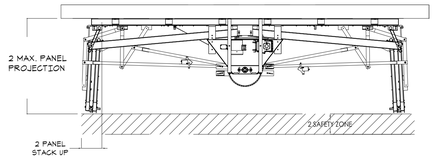

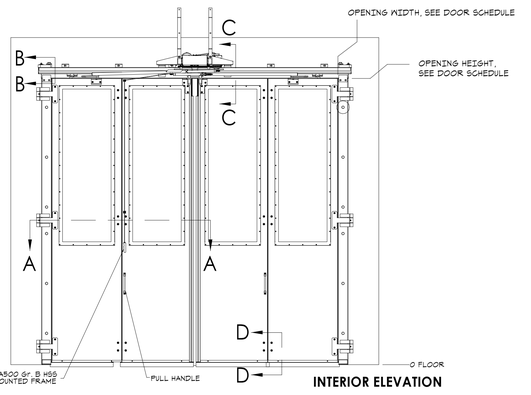

INTERIOR ELEVATION

21 AD.01 BIFOLDING DOOR
1 1/2" = 1'-0"

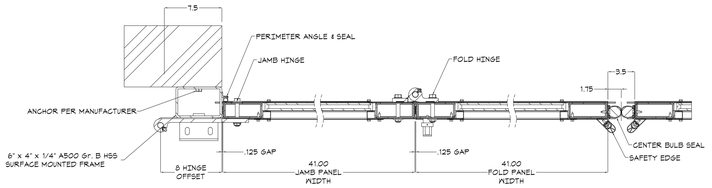

SECTION A-A

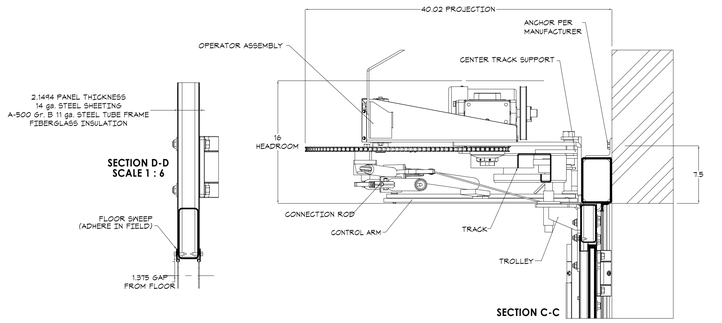

SECTION D-D
SCALE 1 : 6

SECTION C-C

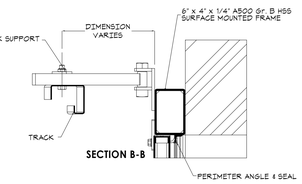

SECTION B-B

22 AD.01 BIFOLDING (FOUR-FOLD) DOOR DETAILS
12" = 1'-0"

* NOTE:

THIN BRICK INSTALLATION:

1. EXISTING CMU WALL WHERE THIN BRICK WILL BE INSTALLED SHALL BE 'CLEAN AND FLAT ENOUGH' - MEANING NO : SEALERS, PAINT, OILS, DIRT, GRIME, ETC. - JUST BARE WASHED CMU (TO REMOVE ANY DUSTING FROM SANDBLASTING OR BEAD BLASTING, IF NEEDED FOR CLEANING OR CARBONATION), BEFORE THE THIN BRICK CAN BE APPLIED DIRECTLY WITH A POLYMER MODIFIED ADHESIVE BONDING MORTAR 1/4" TO 3/8" THICK.

2. THIN BRICK MUST NOT BE APPLIED SO AS TO BRIDGE ANY ACTIVE JOINTS IN THE SUBSTRATE WALL SYSTEM, INCLUDING ACTIVE CRACKS. JOINTS (AND ACTIVE CRACKS) IN THE SUBSTRATE SYSTEM MUST BE MATCHED IN THE THIN BRICK ADHERED VENEER.

3. THIN BRICK MUST NOT BE APPLIED SO AS TO BRIDGE ANY GAPS ON VERTICAL GROOVES OF RIBBED CONCRETE. GAPS MUST BE FILLED WITH POLYMER MODIFIED BONDING MORTAR AND MUST BE MATCHED IN THE THIN BRICK ADHERED VENEER.

4. IF THE SUBSTRATE THICKNESS VARIES OR IF THE THIN BRICK THICKNESS VARIES, A 48"(OR LONGER) STRAIGHT EDGE AND LEVEL SHOULD BE USED TO KEEP THE THIN BRICK ALIGNED, LEVEL, PLUMB, IN A NICE FLAT VERTICAL PLANAR INSTALLATION.

5. USE A "PREBLENDED BAGGED MIX" PREPACKAGED MORTAR THAT HAS A POLYMER ALREADY MIXED IN, SPECIFICALLY FORMULATED FOR BONDING THIN BRICK OR STONE TO THE SUBSTRATE SURFACE.

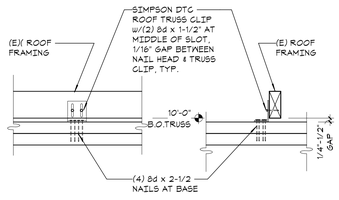

WALL PARALLEL TO TRUSS WALL PERPENDICULAR TO TRUSS

16 AD.01 NON-LOAD BEARING WALL TO TRUSS
1 1/2" = 1'-0"

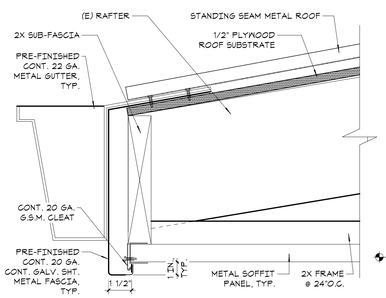

17 AD.01 METAL SOFFIT/EAVE DETAIL
3" = 1'-0"

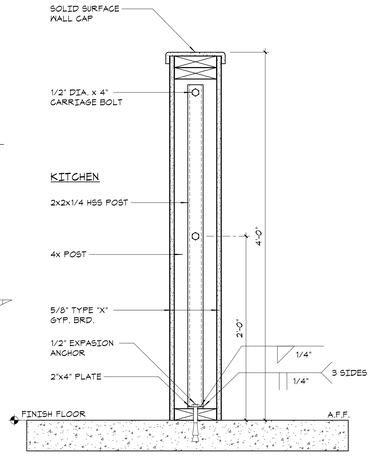

12 AD.01 PONY WALL
1 1/2" = 1'-0"

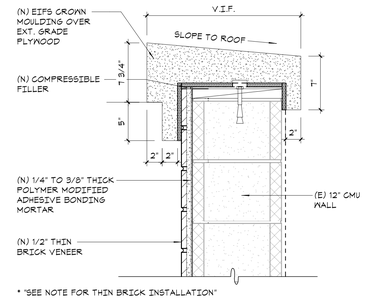

* "SEE NOTE FOR THIN BRICK INSTALLATION"

6 AD.01 EIFS CROWN MOULDING DETAIL
1 1/2" = 1'-0"

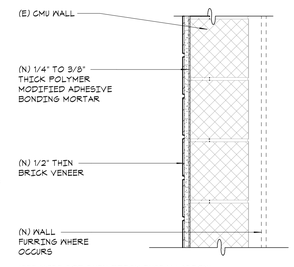

"SEE NOTE FOR THIN BRICK INSTALLATION"

7 AD.01 BRICK VENEER AT (E) CMU
1 1/2" = 1'-0"

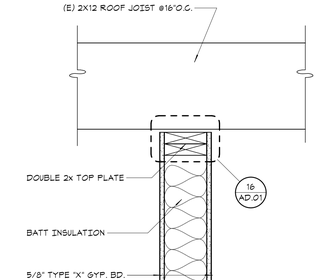

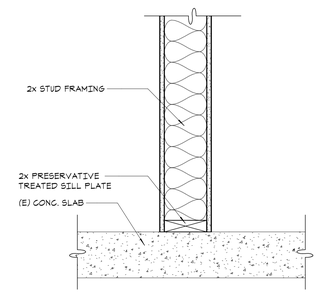

2 AD.01 DEMISING WALL, TYP.
1 1/2" = 1'-0"

TYPE	DESCRIPTION	FIRE RTNG.	INS UL.
1 HR	4" STUD - 1HR. FULL HT	1 HOUR	R-15

18 AD.01 W4 - WOOD PARTITION
3" = 1'-0"

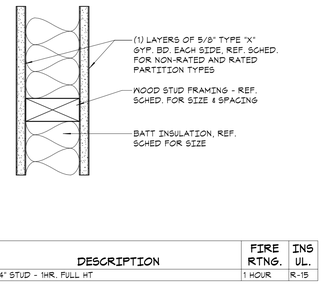

13 AD.01 STEEL BOLLARD DETAIL
3/4" = 1'-0"

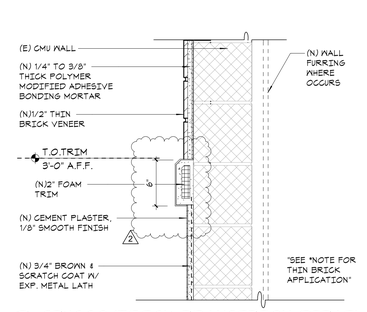

"SEE NOTE FOR THIN BRICK APPLICATION"

8 AD.01 STUCCO/BRICK TRANSITION DETAIL
1 1/2" = 1'-0"

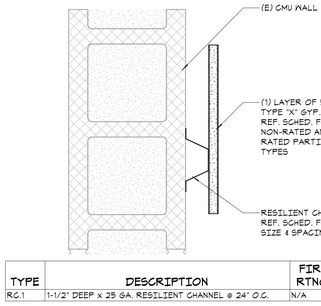

TYPE	DESCRIPTION	FIRE RTNG.	INS UL.
RC.1	1-1/2" DEEP x 25 GA. RESILIENT CHANNEL @ 24" O.C.	N/A	N/A

3 AD.01 WALL FURRING
3" = 1'-0"

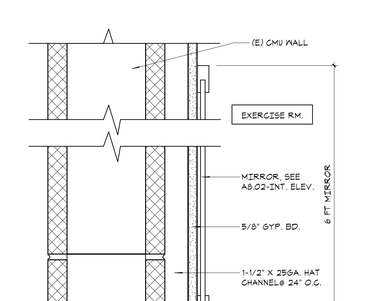

14 AD.01 INT WALL GYP BRD W RUBBER BASE
3" = 1'-0"

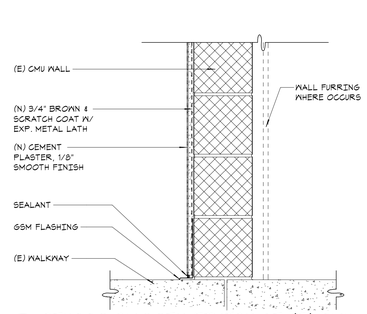

9 AD.01 STUCCO SMOOTH FINISH AT (E) CMU
1 1/2" = 1'-0"

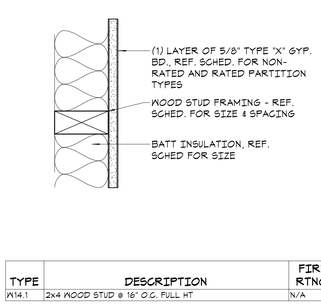

TYPE	DESCRIPTION	FIRE RTNG.	INS UL.
W14.1	2X4 WOOD STUD @ 16" O.C. FULL HT	N/A	R-15

4 AD.01 W1 - WOOD PARTITION
3" = 1'-0"

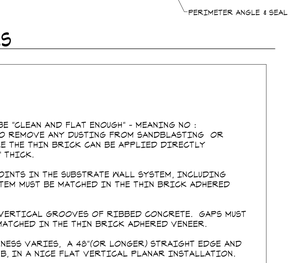

SECTION C-C

SECTION B-B

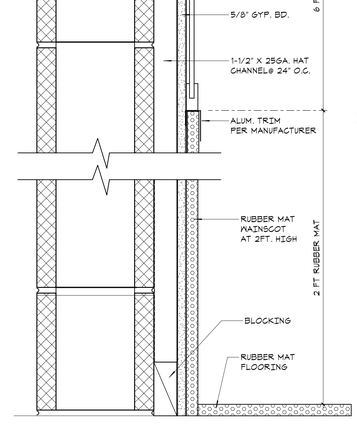

20 AD.01 RUBBER FLOORING WAINSCOT
3" = 1'-0"

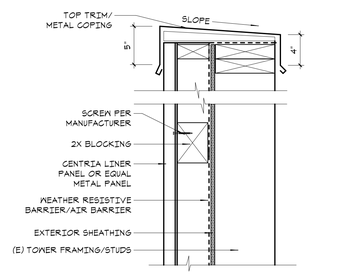

15 AD.01 LINER PANELS AT TOWER
1 1/2" = 1'-0"

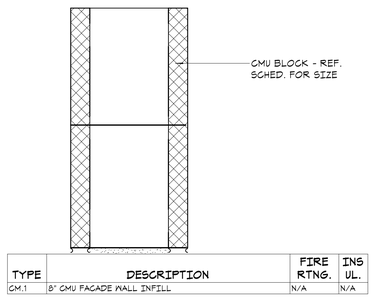

TYPE	DESCRIPTION	FIRE RTNG.	INS UL.
CM.1	8" CMU FACADE WALL INFILL	N/A	N/A

10 AD.01 CO - CMU PARTITION
3" = 1'-0"

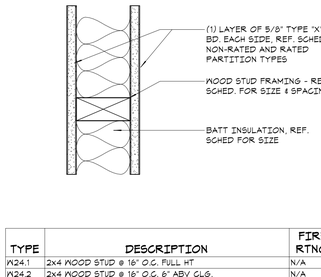

TYPE	DESCRIPTION	FIRE RTNG.	INS UL.
W24.1	2X4 WOOD STUD @ 16" O.C. FULL HT	N/A	R-19
W24.2	2X4 WOOD STUD @ 16" O.C. & 8" ABV CLG.	N/A	R-13
W26.1	2X6 WOOD STUD @ 16" O.C. FULL HT	N/A	R-13

5 AD.01 W2 - WOOD PARTITION
3" = 1'-0"

LDA DESIGNERS & ARCHITECTS

Architect:
LDA Partners, Inc.
Designers & Architects
222 Central Court
Stockton, CA 95204
209.943.0405
www.ldapartners.com

LICENSED ARCHITECT — R. C. WILLIAM KNOX — C28388 — September 2021 — STATE OF CALIFORNIA

Client:
LATHROP-MANTECA FIRE PROTECTION DISTRICT
19001 SOMERSTON PARKWAY
LATHROP, CA 95330
209.941.5102

Project:
FIRE STATION 31 UPGRADES

800 J STREET
LATHROP CA 95330

Project No.: 757-01-20
Drawn By: A.C./R.R.
Checked By: E.W.

No.	Description	Date	By
2	PLAN CHECK #2/ADDENDA #1	12-9-2020	

3RD SUBMITTAL - BLDG. DEPT.

12/9/2020

DETAILS

AD.01

3/9/2021 3:47:21 PM

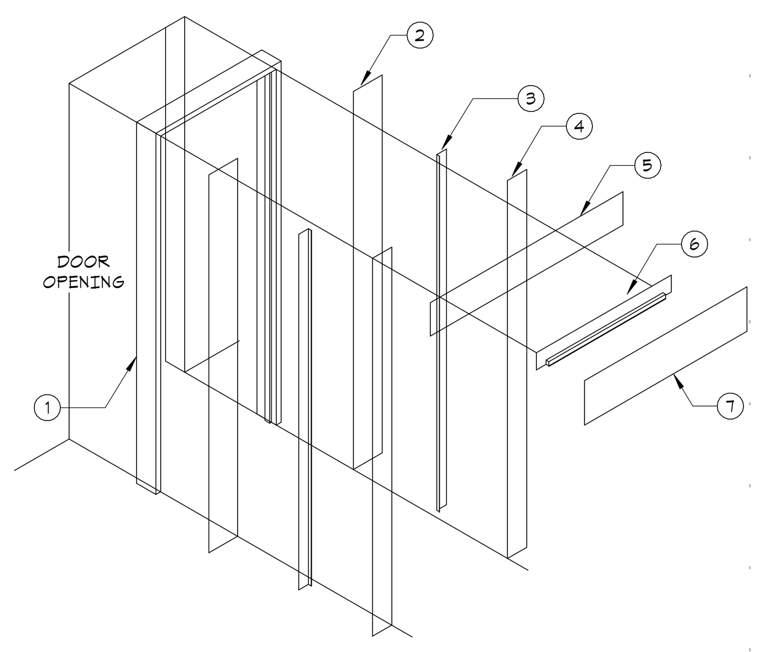

1) DOOR - SEE DOOR SCHEDULE
2) FLEXIBLE BITUMINOUS BASE JAMB FLASHING PER MANUF. SPECIFICATIONS
3) FLEXIBLE FLASHING - HGT. OF DOOR - PRIME & PAINT - TYP.
3" — 1" — 1/8" DRIP EDGE
4) FLEXIBLE BITUMINOUS JAMB FLASHING PER MANUF. SPECIFICATIONS
5) BITUMINOUS BASE HEAD FLASHING PER MANUF. SPECIFICATIONS
6) FLEXIBLE FLASHING W/ SOLDERED 'END DAMS' - WIDTH OF DOOR - PRIME & PAINT - SEE _/AD._
3" — 1" @ 5% SLOPE MIN. — 1" — 1/8" DRIP EDGE
7) FLEXIBLE BITUMINOUS HEAD FLASHING PER MANUF SPECIFICATIONS

NOTE
LAP ALL SHEET METAL FLASHINH 3" (MIN.) W/ BITUMINOUS MEMBRANE FLASHING-TYP. U.O.N.

NOTE
INTEGRATE WINDOW FLASHING WEATHER-BOARD FASHION AT HEAD, JAMB, & SILL W/ BUILDING PAPER PER MANUF. SPECIFICATIONS

*** NOTE ***
FLASHING DETAILS ARE DIAGRAMATIC. ALL FLASHING SHALL BE CONSTRUCTED IN ACCORDANCE W/ SHEET METAL & AIR CONDITIONING CONTRACTORS' NATIONAL ASSOCIATION (SMACNA) MANUAL

*** NOTE ***
FLASHING SEQUENCE IS DIAGRAMATIC. FOLLOW MANUFACTURER'S RECOMMENDATIONS FOR WIDTH & LAP DIMENSIONS OF BITUMINOUS FLASHING, BUILDING PAPER AND SEALANT.

26 AD.02 TYP. DOOR FLASHING SEQUENCE
1/2" = 1'-0"

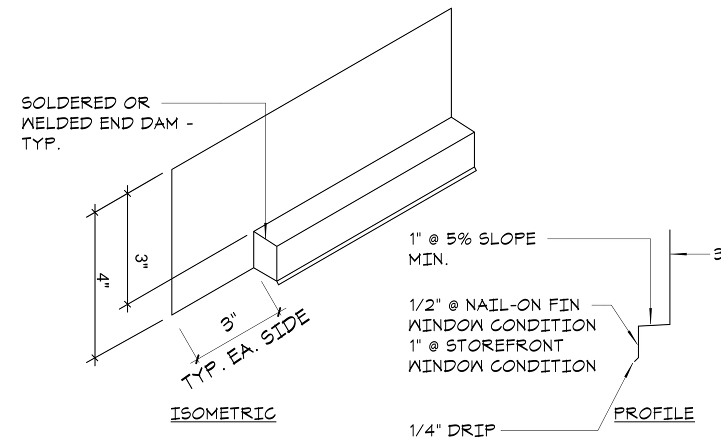

NOTE
GALV. SHT. MTL. FLASHING @ HOLLOW STEEL DOORS - TYP. ALUMINUM FLASHING @ WINDOWS

*** NOTE ***
FLASHING DETAILS ARE DIAGRAMATIC. ALL FLASHING SHALL BE CONSTRUCTED IN ACCORDANCE W/ SHEET METAL & AIR CONDITIONING CONTRACTORS' NATIONAL ASSOCIATION (SMACNA) MANUAL

16 AD.02 TYP. OPENING HEAD FLASHING
3" = 1'-0"

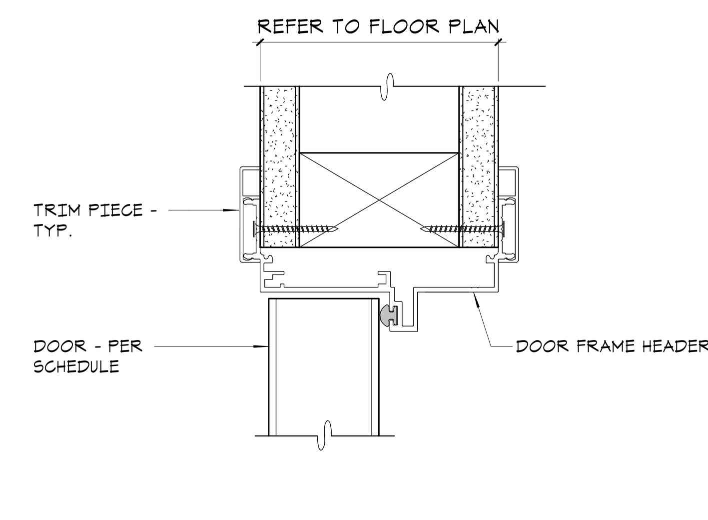

11 AD.02 ALUM. DOOR FRAME HEAD
6" = 1'-0"

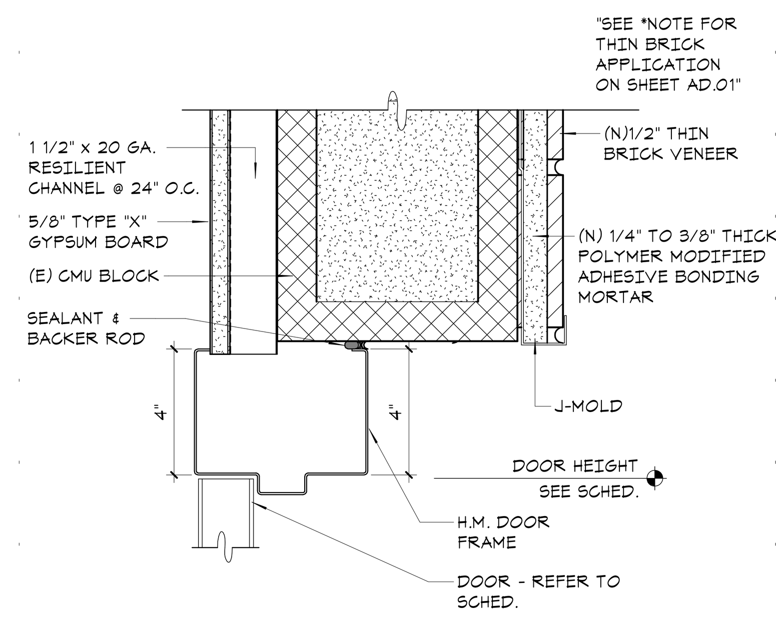

6 AD.02 H.M. DOOR HEAD @ CMU w/FUR.
3" = 1'-0"

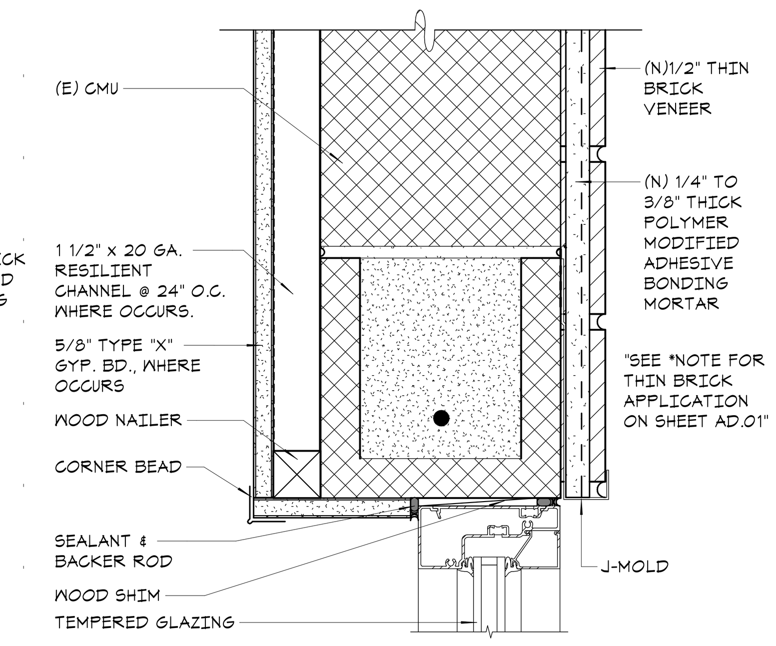

1 AD.02 S.F. HEAD/JAMB w/FURRING @ CMU
3" = 1'-0"

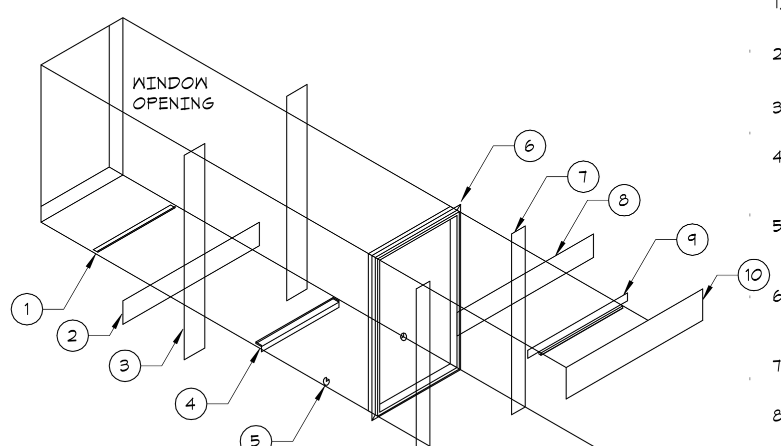

1) 1/2"x2"xOPENING WIDTH 24GA. GALV. SHT. MTL. SILL DAM
2) BITUMINOUS BASE SILL FLASHING PER MANUF. SPECIFICATIONS
3) BITUMINOUS BASE JAMB FLASHING PER MANUF. SPECIFICATIONS
4) G.S.M. SILL DAM FLASHING - LEG UP ON THREE SIDES - SEE DTL. 9/AD.04
5) BITUMINOUS CIRCLE CORNER FLASHING - TYP. @ SILL INSIDE & OUTSIDE CORNERS
6) WINDOW - EMBED IN CONT. BEAD OF SEALANT - SEAL FASTENERS - PER MANUF. SPECIFICATIONS
7) BITUMINOUS JAMB FLASHING PER MANUF. SPECIFICATIONS
8) BITUMINOUS BASE HEAD FLASHING PER MANUF. SPECIFICATIONS
9) 24GA. GALV. SHT. MTL. FLASHING W/ SOLDERED 'END DAMS' - WIDTH OF WINDOW - PRIME & PAINT BLDG. COLOR - TYP. SEE DTL. 9/AD.03
3" — 7/8" 5% SLOPE MIN. — 3/4" — 1/8" DRIP EDGE
10) BITUMINOUS HEAD FLASHING PER MANUF. SPECIFICATIONS
11) INTEGRATE WINDOW FLASHING WEATHER-BOARD FASHION AT HEAD & SILL W/ BUILDING PAPER PER MANUF. SPECIFICATIONS

*** NOTE ***
FLASHING SEQUENCE IS DIAGRAMATIC. FOLLOW MANUFACTURER'S RECOMMENDATIONS FOR WIDTH & LAP DIMENSIONS OF BITUMINOUS FLASHING, BUILDING PAPER AND SEALANT.

*** NOTE ***
LAP ALL SHEET METAL FLASHING 3" (MIN.) W/ BITUMINOUS MEMBRANE FLASHING. -TYP. U.O.N.

*** NOTE ***
FLASHING DETAILS ARE DIAGRAMATIC. ALL FLASHING SHALL BE CONSTRUCTED IN ACCORDANCE W/ SHEET METAL & AIR CONDITIONING CONTRACTORS' NATIONAL ASSOCIATION (SMACNA) MANUAL

27 AD.02 TYP. WINDOW FLASHING SEQUENCE
1" = 1'-0"

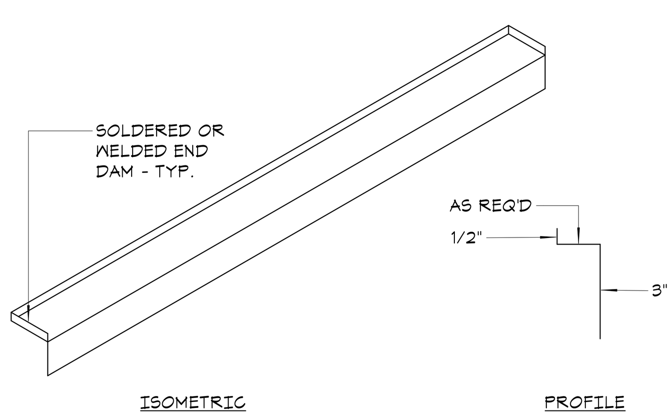

NOTE
FLASHING @ WINDOWS - TYP.

*** NOTE ***
FLASHING DETAILS ARE DIAGRAMATIC. ALL FLASHING SHALL BE CONSTRUCTED IN ACCORDANCE W/ SHEET METAL & AIR CONDITIONING CONTRACTORS' NATIONAL ASSOCIATION (SMACNA) MANUAL

17 AD.02 TYP. WINDOW SILL FLASHING
3" = 1'-0"

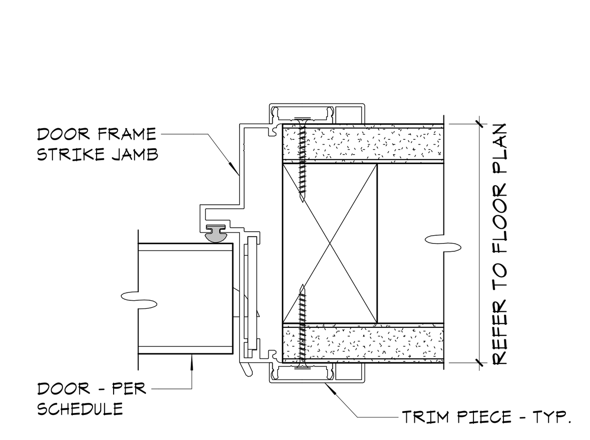

12 AD.02 ALUM. DOOR FRAME JAMB
6" = 1'-0"

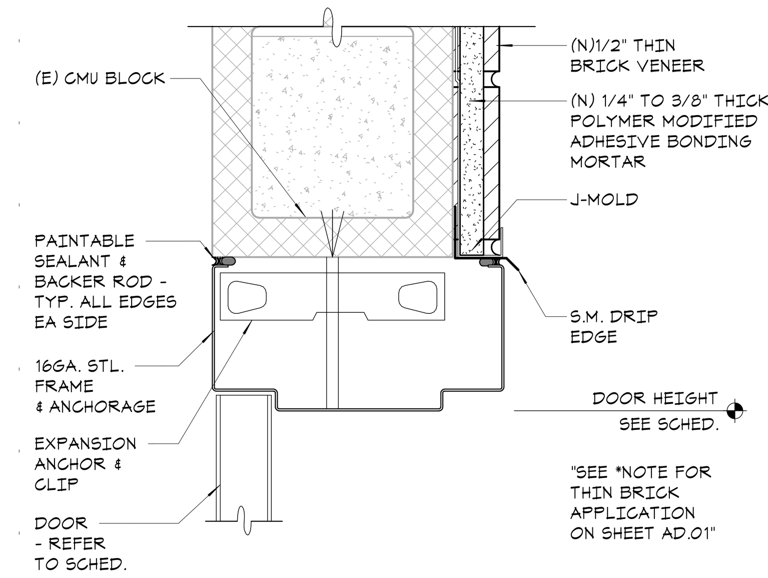

7 AD.02 H.M. DOOR HEAD/JAMB @ C.M.U.
3" = 1'-0"

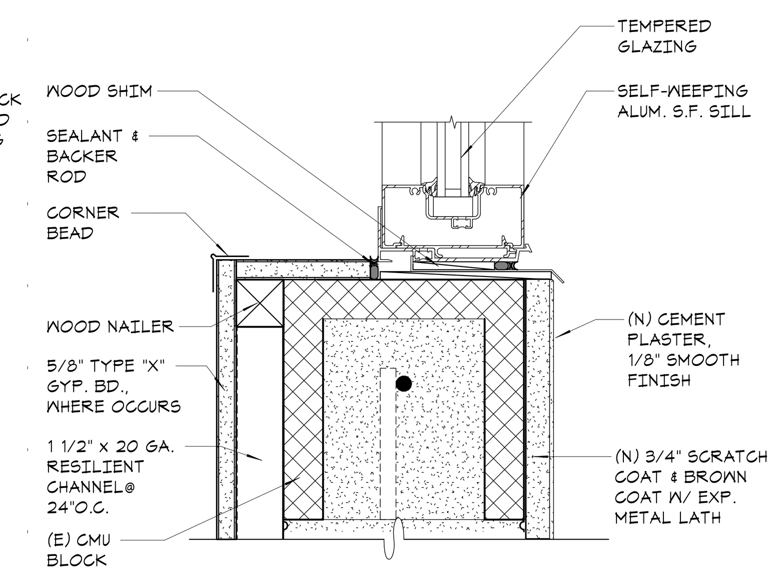

2 AD.02 S.F. SILL w/FURRING @ CMU
3" = 1'-0"

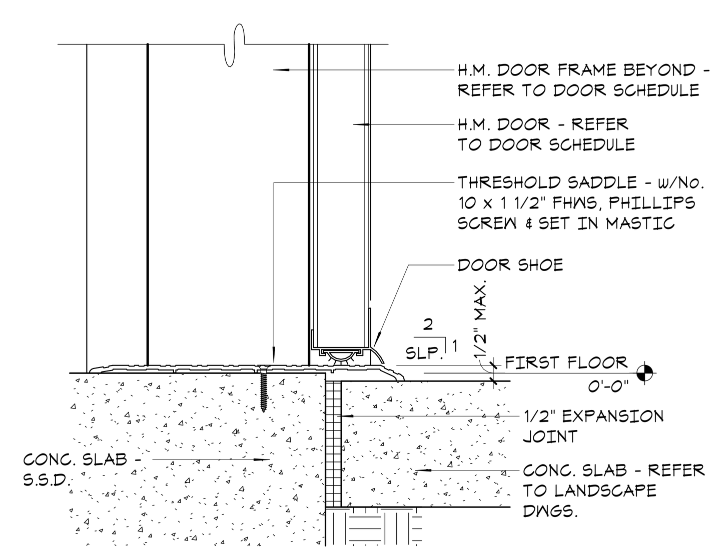

23 AD.02 H.M. DOOR SADDLE THRESHOLD
3" = 1'-0"

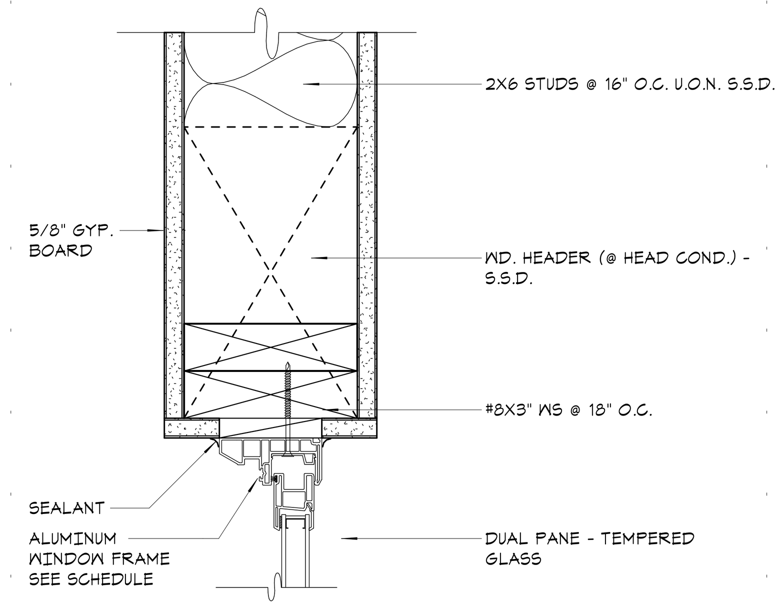

18 AD.02 SERVICE WINDOW HEAD @ GB/GB
3" = 1'-0"

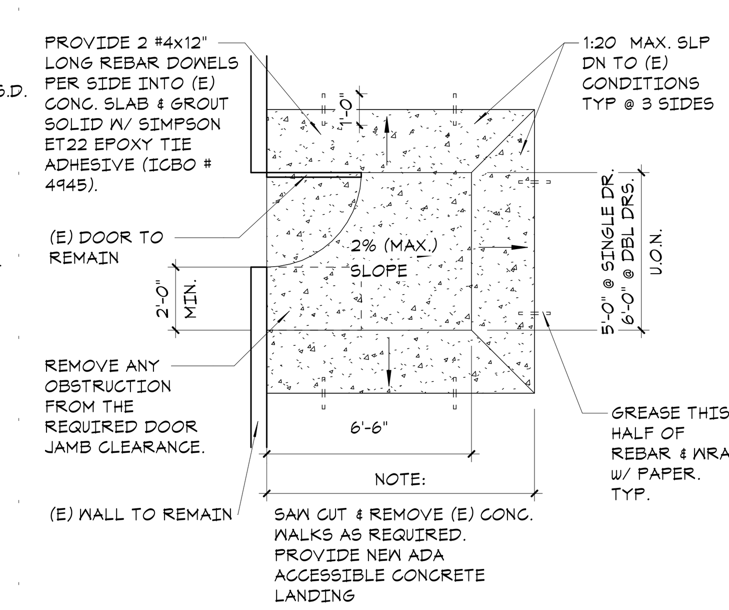

13 AD.02 EXT. DR LANDING @ (E) DOOR
1/4" = 1'-0"

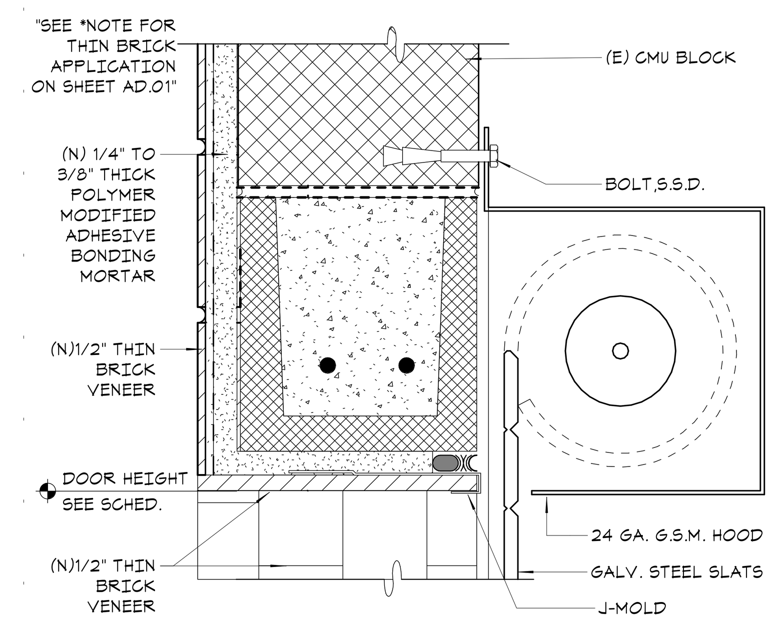

8 AD.02 OVERHEAD COILING DOOR HEAD@CMU
3" = 1'-0"

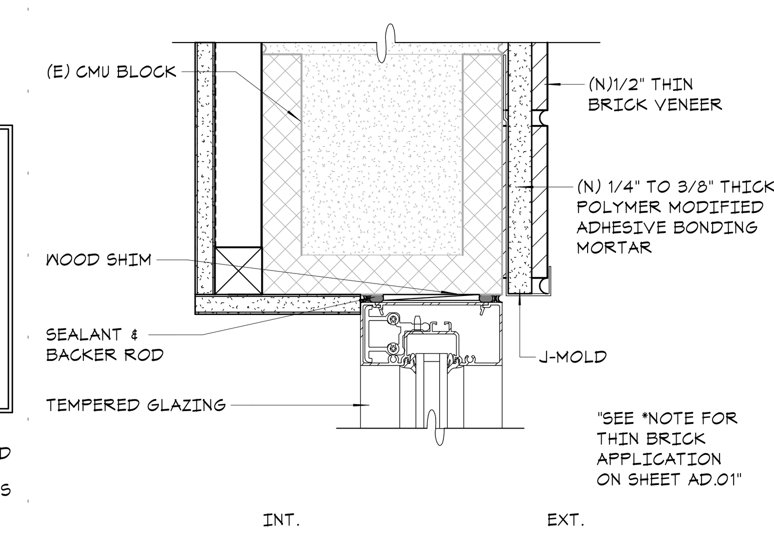

3 AD.02 S.F. HEAD/JAMB @ CMU
3" = 1'-0"

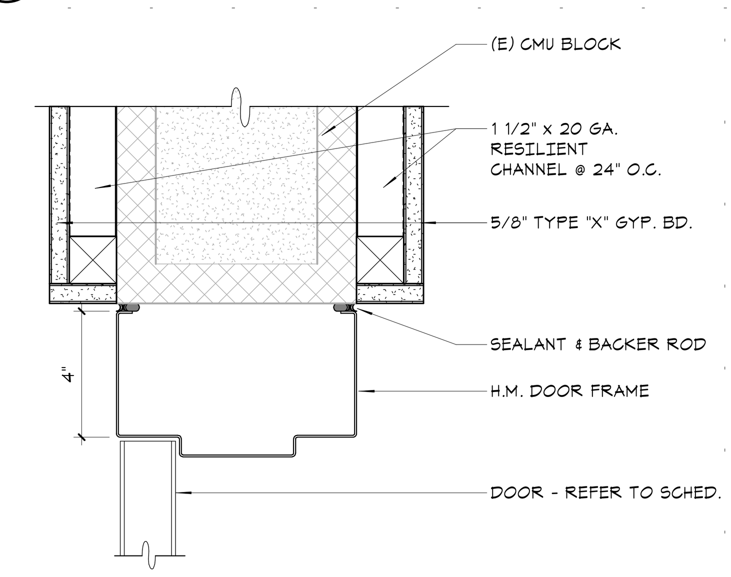

24 AD.02 H.M. DOOR HEAD @ CMU
3" = 1'-0"

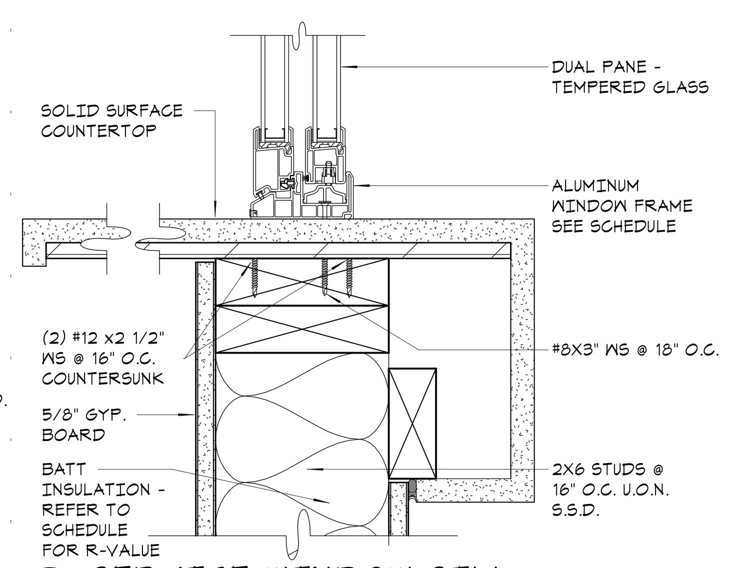

19 AD.02 SERVICE WINDOW SILL
3" = 1'-0"

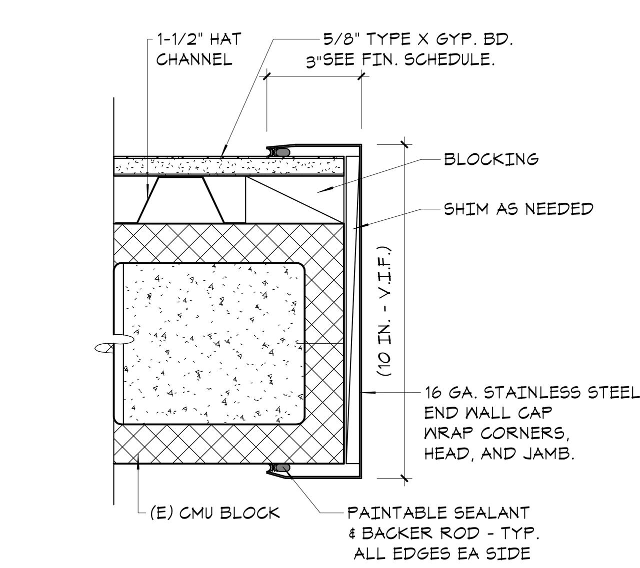

14 AD.02 WALL END CAP
3" = 1'-0"

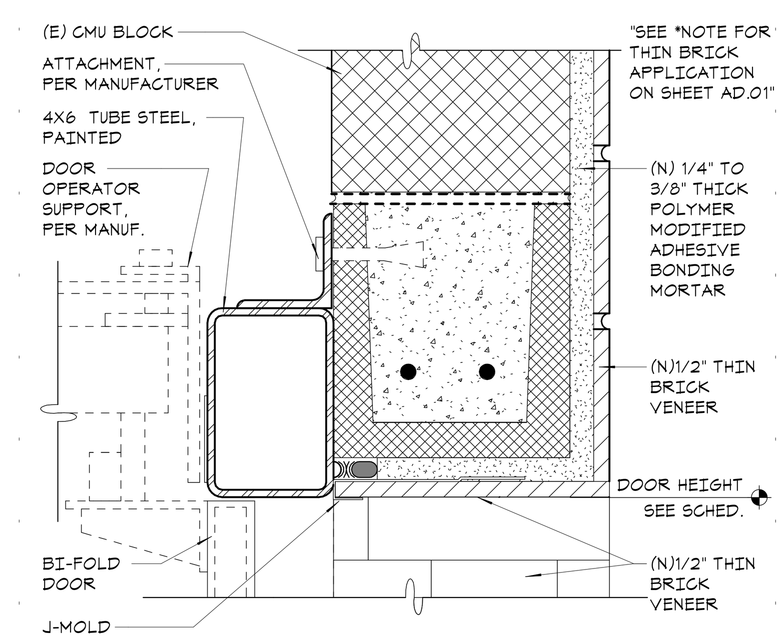

9 AD.02 FOUR-FOLD DOOR
3" = 1'-0"

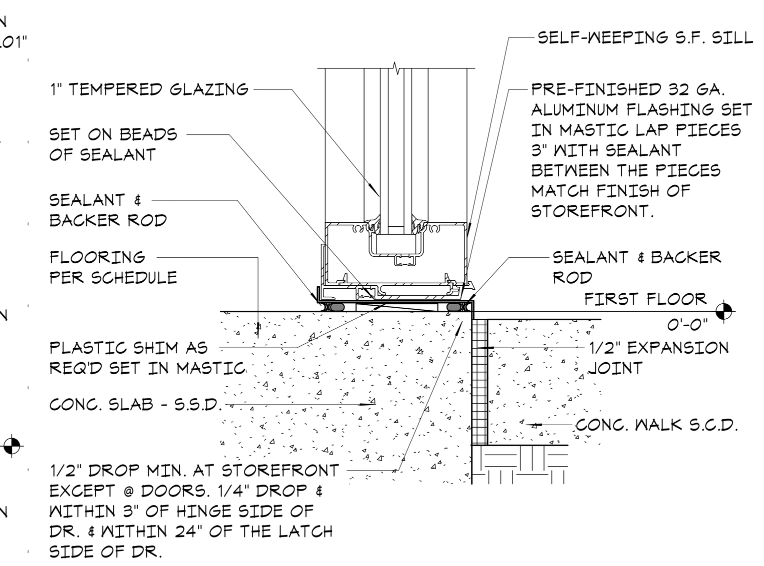

4 AD.02 S.F. SILL @ FOOTING
3" = 1'-0"

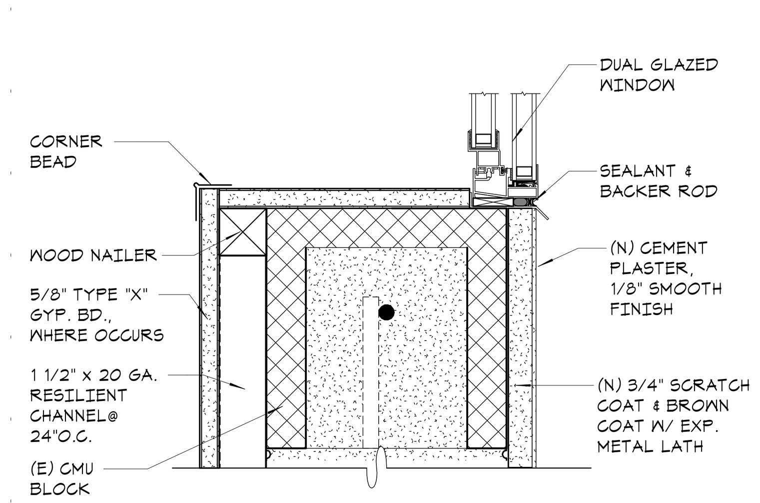

20 AD.02 WINDOW SILL @ CMU
3" = 1'-0"

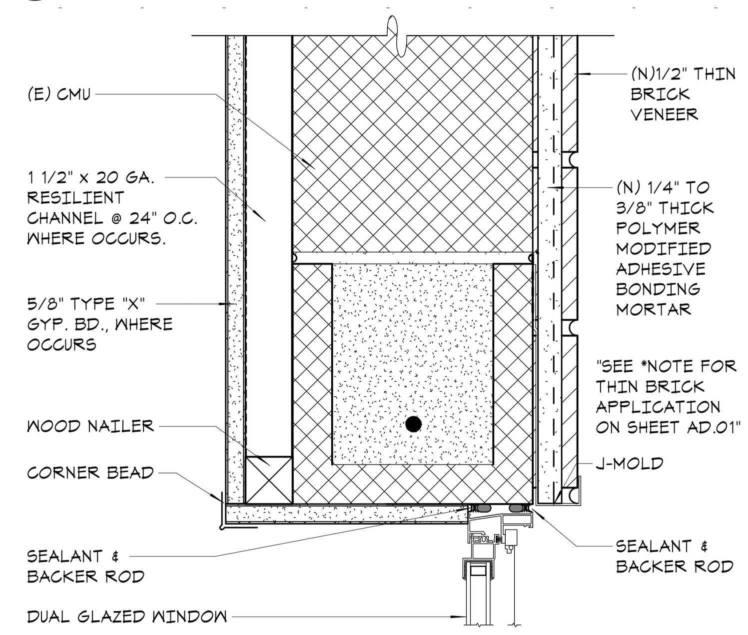

15 AD.02 WINDOW HEAD/JAMB CMU
3" = 1'-0"

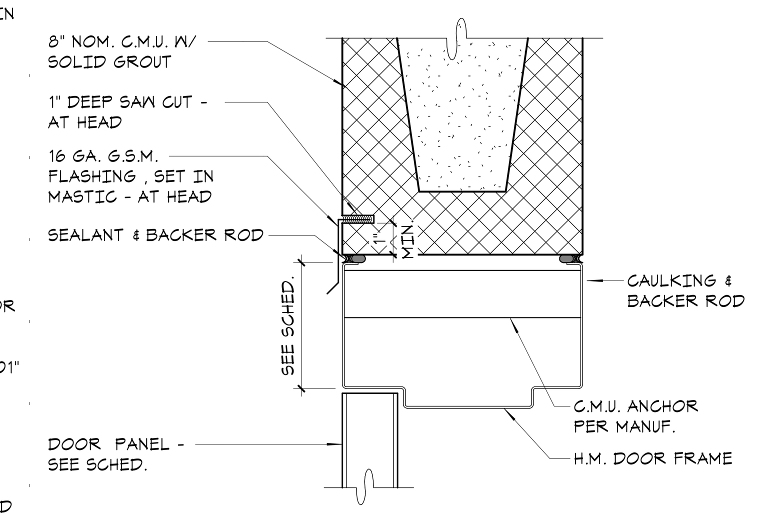

10 AD.02 S.C. DOOR HEAD/JAMB AT C.M.U.
3" = 1'-0"

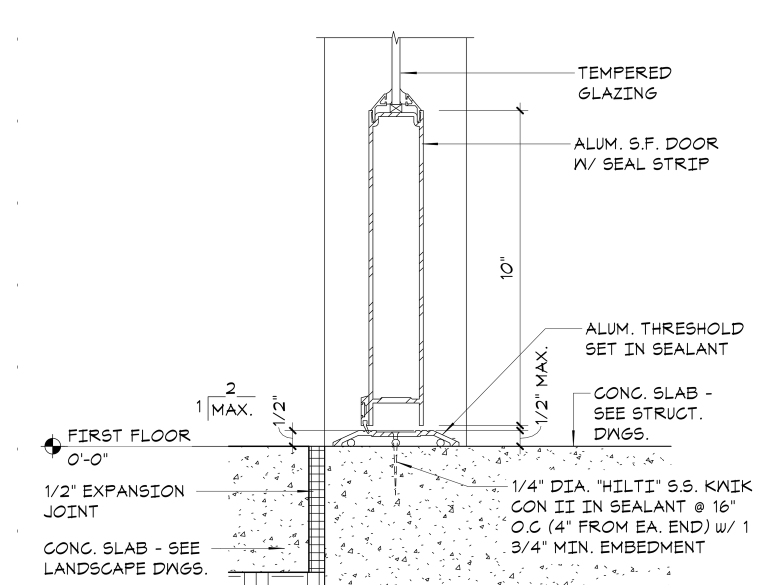

5 AD.02 S.F. DOOR THRESHOLD
3" = 1'-0"

12/9/2020 8:47:24 PM

LDA
DESIGNERS & ARCHITECTS

Architect:
LDA Partners, Inc.
Designers & Architects
222 Central Court
Stockton, CA 95204
209.943.0405
www.ldapartners.com

LICENSED ARCHITECT ERIC WILLIAM WOHLE C28388 September 2021 STATE OF CALIFORNIA

Client:
LATHROP-MANTECA FIRE PROTECTION DISTRICT
19001 SOMERSTON PARKWAY
LATHROP, CA 95330
209.941.5102

Project:
FIRE STATION 31 UPGRADES

800 J STREET
LATHROP CA 95330

Project No.: 757-01-20
Drawn By: Author
Checked By: Checker

No.	Description	Date	By
1	PLAN CHECK #1 1ST REVIEW CYCLE	10-21-2020	

3RD SUBMITTAL - BLDG. DEPT.

12/9/2020

DETAILS

AD.02

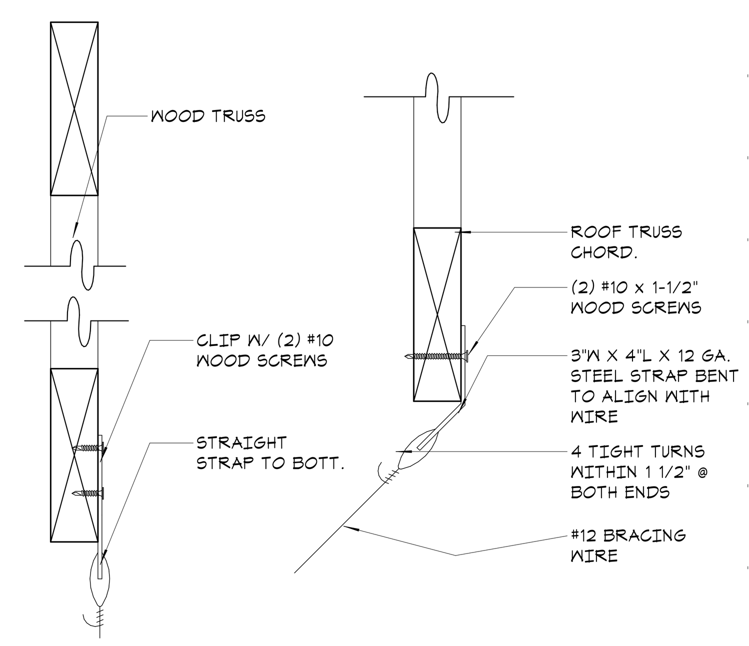

21 AD.03 **T-BAR SPLAY BRACE**
3" = 1'-0"

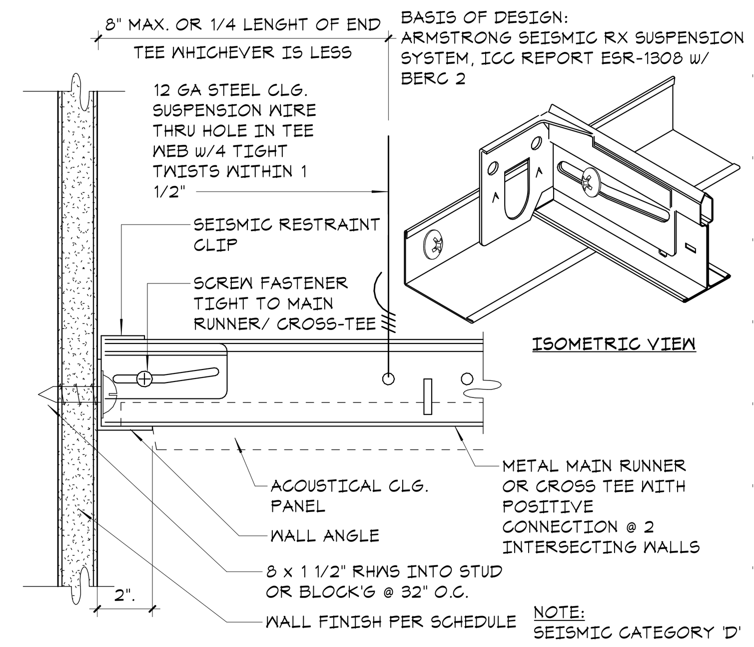

16 AD.03 **SUSP. CLG. ATTACH'D WALL ANGLE**
6" = 1'-0" FILE: 095144

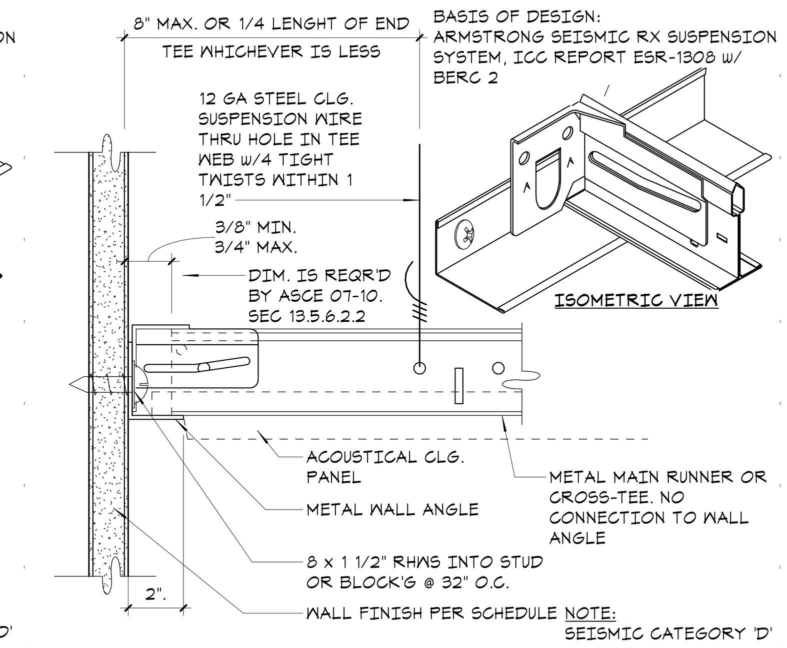

11 AD.03 **SUSP. CLG. 'FLOAT' WALL ANGLE**
6" = 1'-0" FILE: 095146

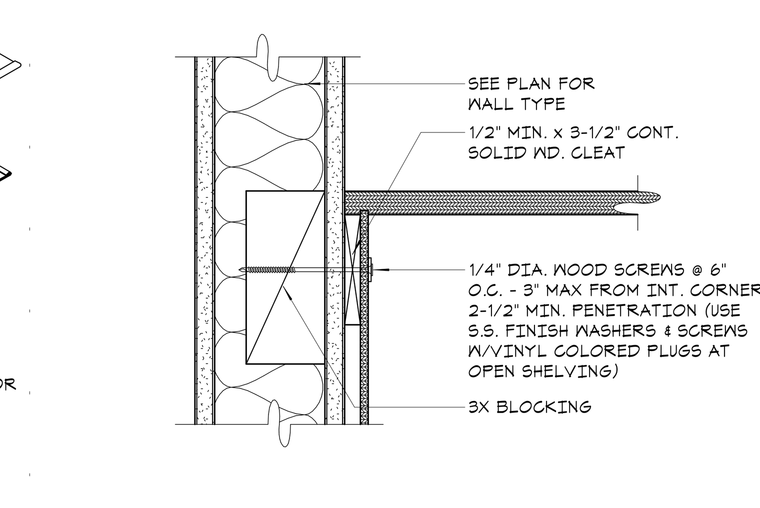

6 AD.03 **UPPER CABINET TOP ANCHOR**
3" = 1'-0"

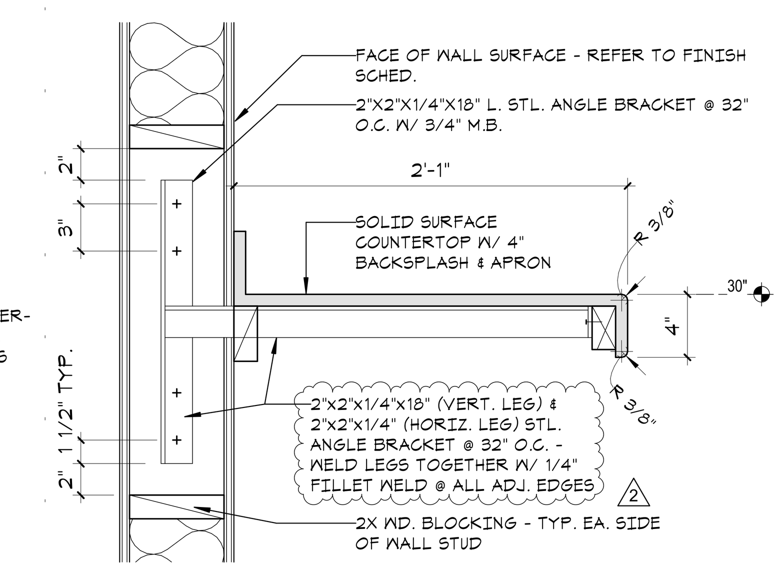

1 AD.03 **COUNTER TOP**
1 1/2" = 1'-0"

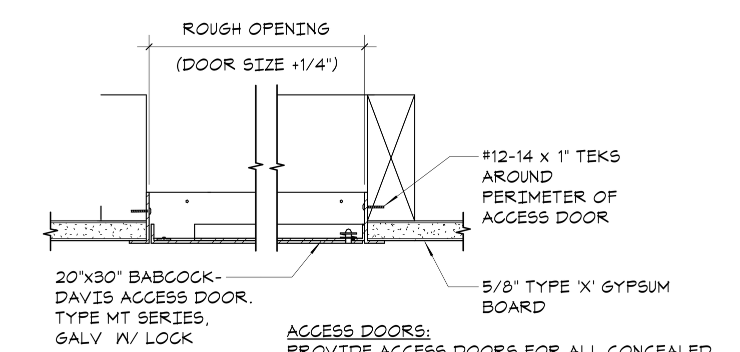

ACCESS DOOR SIZES:

CEILINGS: 24" x 30"
18" x 18" (DIRECT ACCESS TO VALVE OR DEVICE)
WALLS: 30" x 30" (U.O.N.)

ACCESS DOORS:
PROVIDE ACCESS DOORS FOR ALL CONCEALED ITEMS THAT MAY REQUIRE SERVICE, MAINTENANCE, ADJUSTMENT, ETC., WHETHER SHOWN OR NOT. SHOWN LOCATIONS AND/OR QUANTITIES ARE APPROXIMATE, AND SHALL BE COORDINATED IN THE FIELD WITH ALL TRADES TO PROVIDE THE REQUIRED ACCESS. PROVIDE SHOP DRAWINGS TO THE ARCHITECT FOR REVIEW.

22 AD.03 **CEILING ACCESS DOOR**
3" = 1'-0"

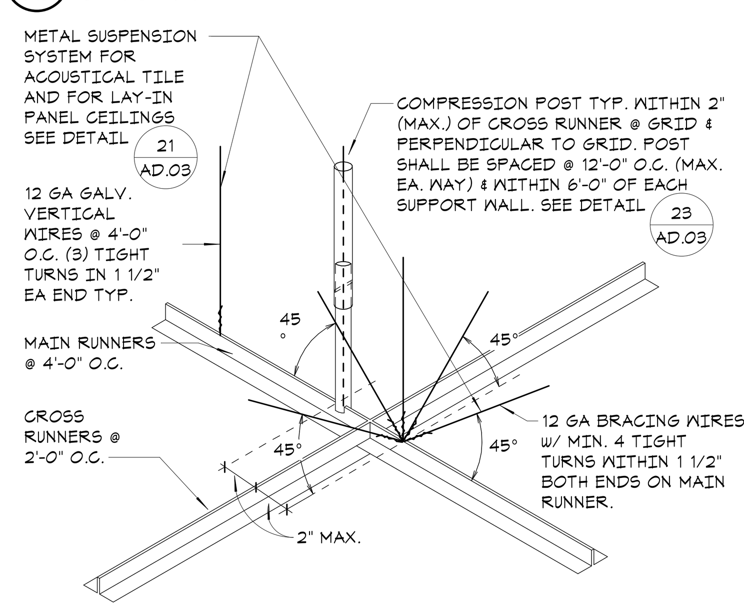

17 AD.03 **SUSPENDED CEILING T-BAR GRID**
1/2" = 1'-0"

VERTICAL SUPPORT:
12 GAUGE WIRES 4' ON CENTER WITHIN 8" OF EACH WALL, ALONG MAIN RUNNER. HANGER WIRES TO BE WITHIN 1:6 OF PLUMB UNLESS COUNTER SLOPING WIRES ARE PROVIDED.
LATERAL BRACING:
12 GAUGE WIRE, 4 WIRES SECURED WITHIN 2" OF THE CROSS RUNNER INTERSECTION AND SPLAYED 90° FROM EACH OTHER AT AN ANGLE NOT EXCEEDING 45° FROM THE PLANE OF THE CEILING. A STRUT FASTENED TO THE MAIN RUNNER SHALL BE EXTENDED TO AND FASTENED TO THE STRUCTURE MEMBERS SUPPORTING THE ROOF OR FLOOR ABOVE. THESE 4 WIRE BRACING POINTS TO BE WITHIN 6' OF EACH WALL AND 12' O.C. IN EACH DIRECTION. FOR TILE CEILINGS, ENDS OF MAIN RUNNERS AND CROSS MEMBERS SHALL BE TIED TOGETHER TO PREVENT THEIR SPREADING.
MECHANICAL SERVICES:
CEILING MOUNTED AIR TERMINALS WIGHING LESS THAN 20 POUNDS SHALL BE POSITIVELY ATTACHED TO THE CEILING RUNNERS. TERMINALS WEIGHING MORE THAN 20 POUNDS SHALL BE INSTALLED AS PER LIGHT FIXTURE.

INSTALLATION OF SUSPENDED CEILING SHALL CONFORM TO CBC 803.9.1.1, CBC 1616A.1.20, ASCE 7-05 CHAPTER 13, ASTM 635, ASTM 636, ICC ES REPORT, DSA IR 25-2.13, AND ASTM E580 AND MANUFACTURER'S SPECIFICATIONS.

REFER TO **SUSPENDED CEILING DSA IR 25-2.13 LIST** FOR ATTACHMENT OF LIGHT FIXTURES, FLEXIBLE SPRINKLER HOSE FITTINGS, CEILING-MOUNTED AIR TERMINALS AND OTHER MISCELLANEOUS.

SUSPENDED CEILING GRID SYSTEM AS MANUFACTURED BY:
ARMSTRONG WORLD INDUSTRIES, INC.
PRELUDE XL OR EQUAL. ICC REPORT NO. ICC-ES 1308.

CLASSIFICATION OF CEILING GRID IS HEAVY DUTY.
MANUFACTURER'S CATALOG NUMBER - MAIN RUNNER #7301 (HD)
MANUFACTURER'S CATALOG NUMBER - CROSS RUNNER #7340 (HD)

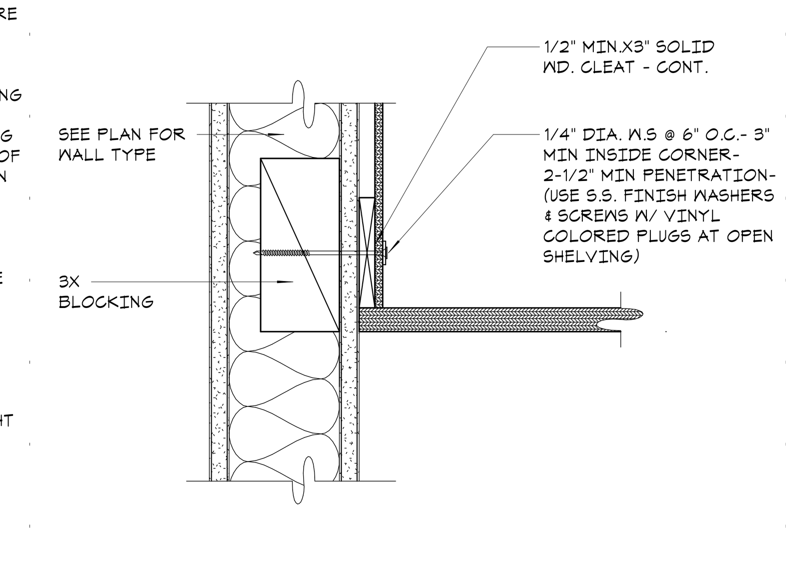

7 AD.03 **UPPER CABINET LOWER ANCHOR**
3" = 1'-0"

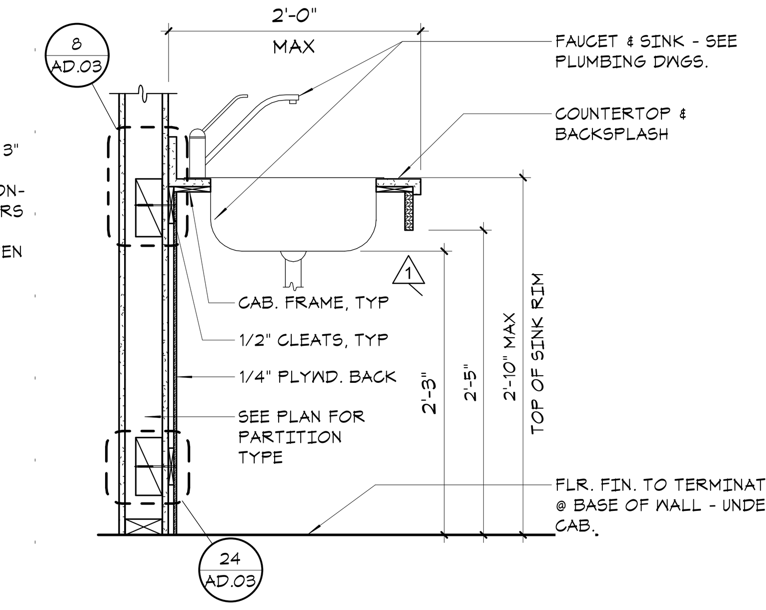

2 AD.03 **ACCESS. BASE CABINET AT SINK**
1" = 1'-0"

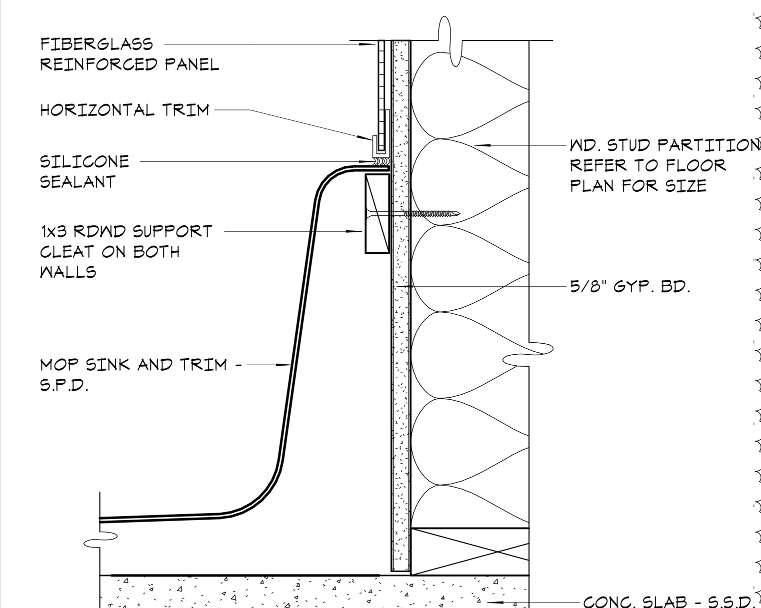

28 AD.03 **MOP SINK**
3" = 1'-0"

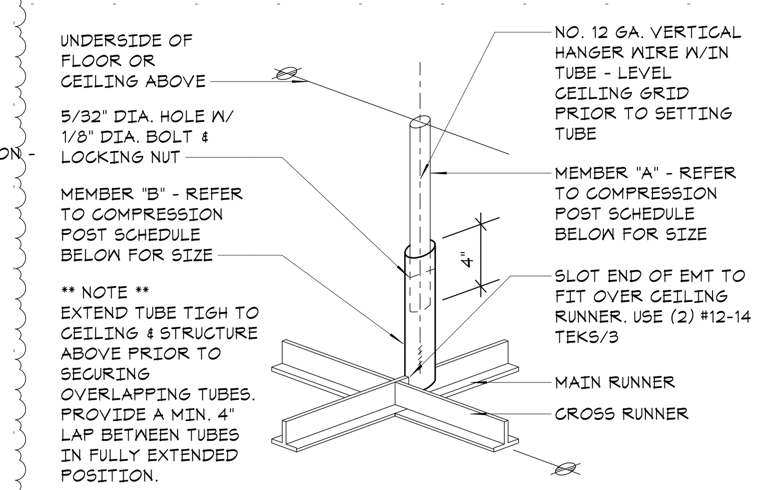

COMPRESSION POST SCHEDULE

MAXIMUM LENGTH	MEMBER "A"	MEMBER "B"
6'-6"	1" DIA. EMT	1 1/4" DIA. EMT
8'-6"	1 1/4" DIA. EMT	1 1/2" DIA. EMT

23 AD.03 **COMPRESSION POST**
1" = 1'-0"

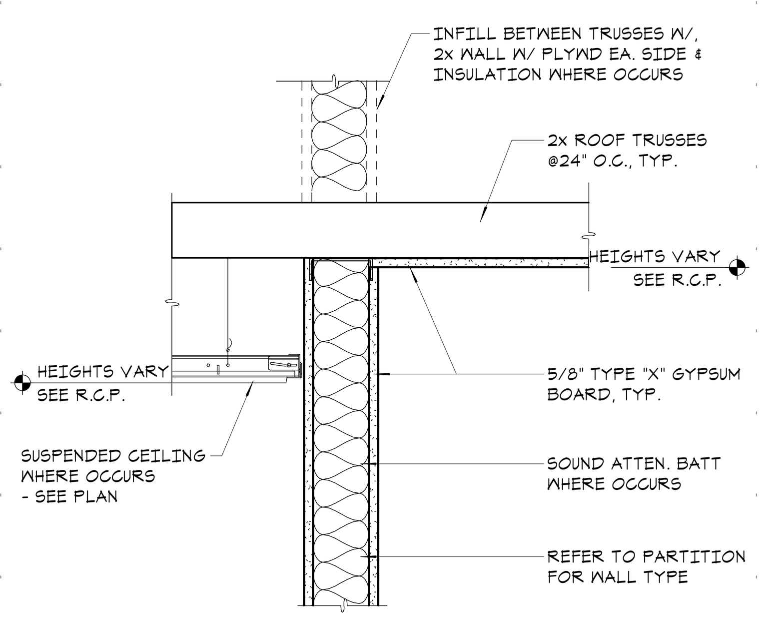

18 AD.03 **FRAMED GYP BRD/SUSP CLG**
1 1/2" = 1'-0"

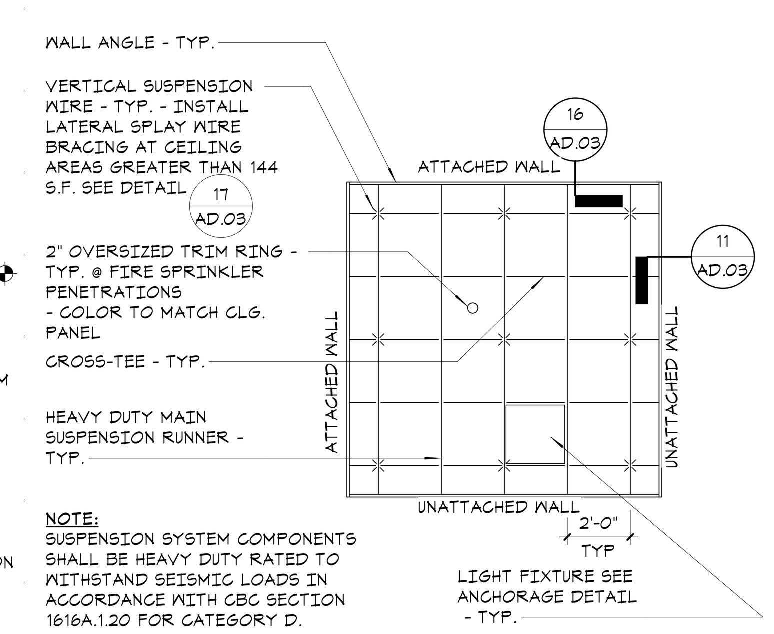

NOTE:
SUSPENSION SYSTEM COMPONENTS SHALL BE HEAVY DUTY RATED TO WITHSTAND SEISMIC LOADS IN ACCORDANCE WITH CBC SECTION 1616A.1.20 FOR CATEGORY D.

13 AD.03 **TYP. SUSP. ACOUST. PNL CEILING**
1/4" = 1'-0"

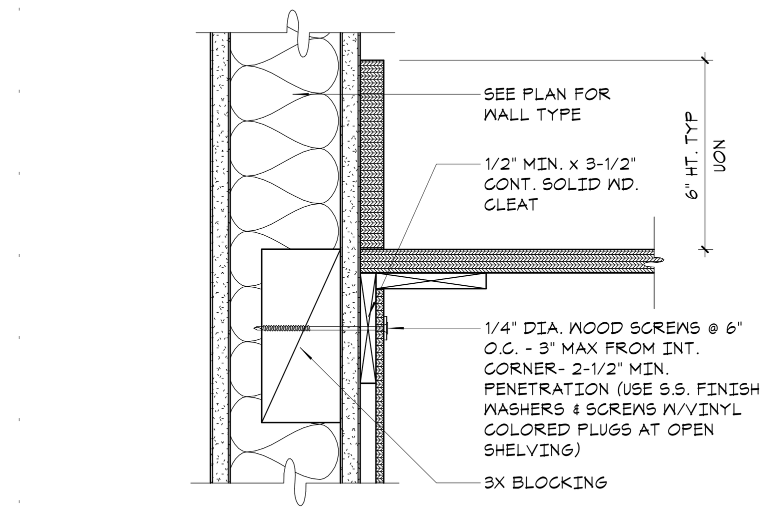

8 AD.03 **BASE CABINET TOP ANCHOR**
3" = 1'-0"

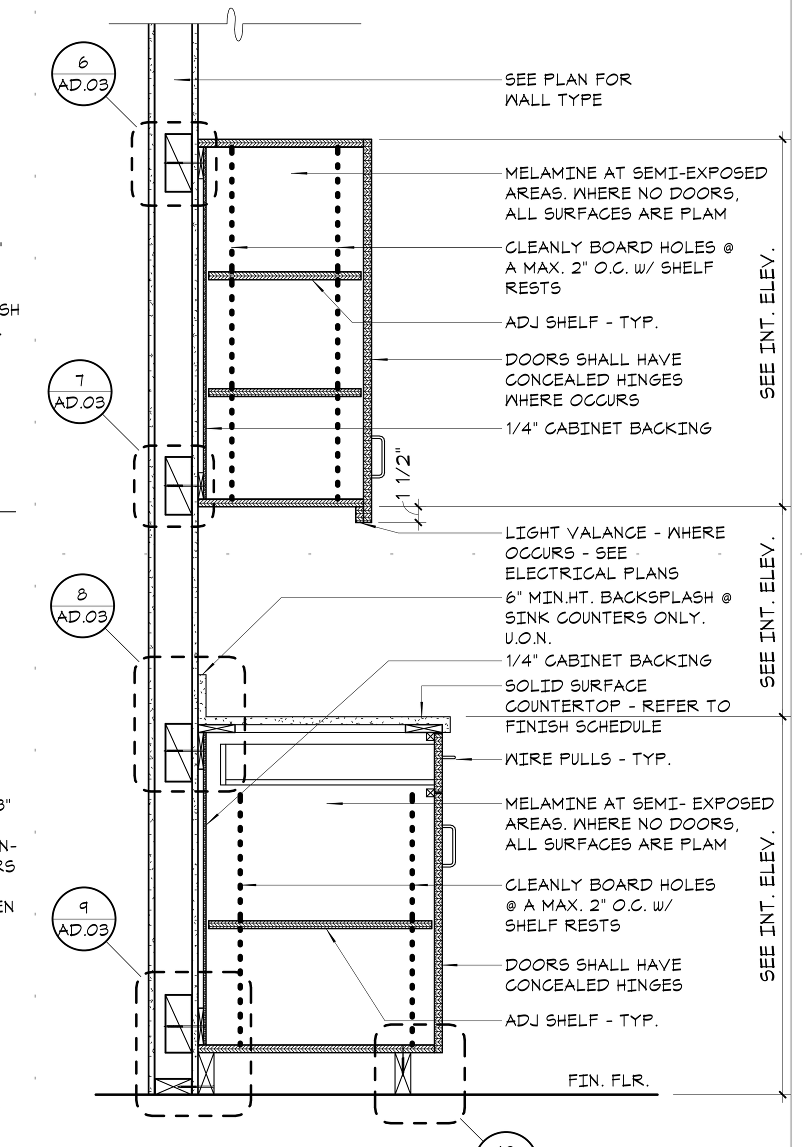

4 AD.03 **BASE & UPPER CABINET SECTION**
1" = 1'-0"

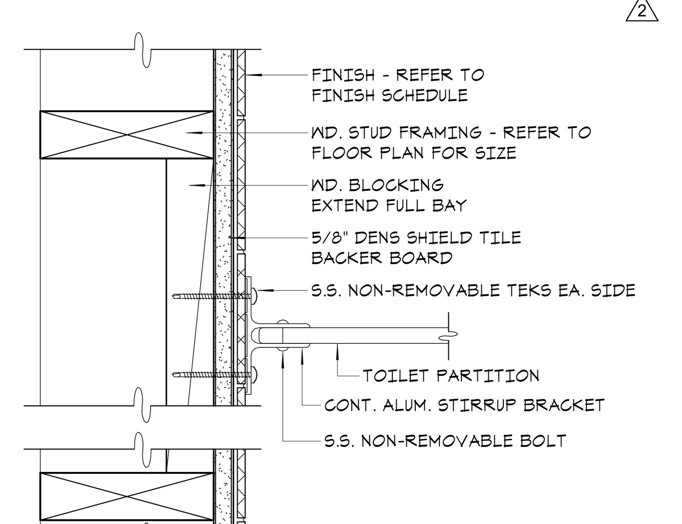

29 AD.03 **TOILET PARTITION @ WALL**
3" = 1'-0"

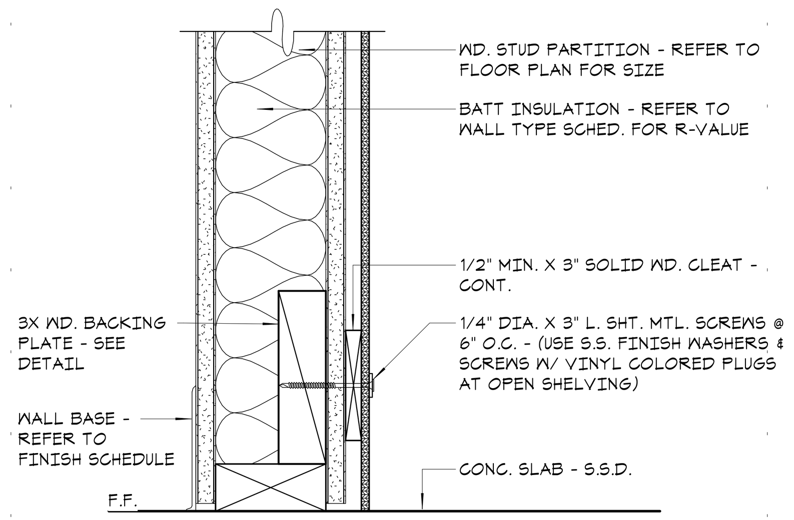

NOTE:
ANCHORAGE PER WIC # OPA-2649-10

24 AD.03 **ACCESS. BASE CAB ANCHOR AT WALL**
3" = 1'-0"

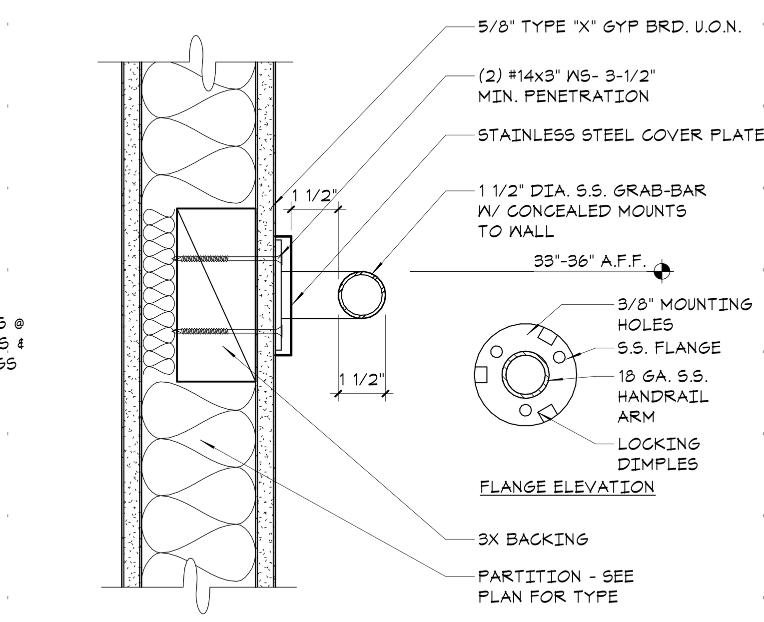

19 AD.03 **GRAB BAR MOUNTING**
3" = 1'-0"

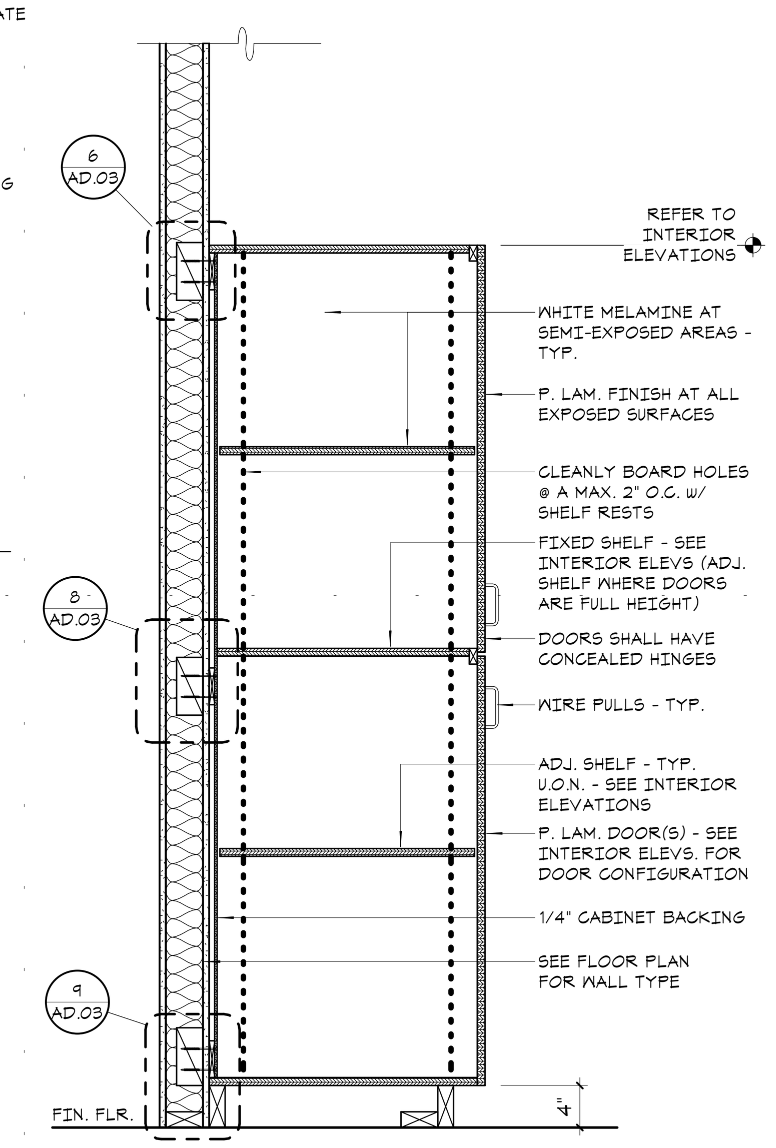

15 AD.03 **FULL HT. CASEWORK SECTION**
1" = 1'-0"

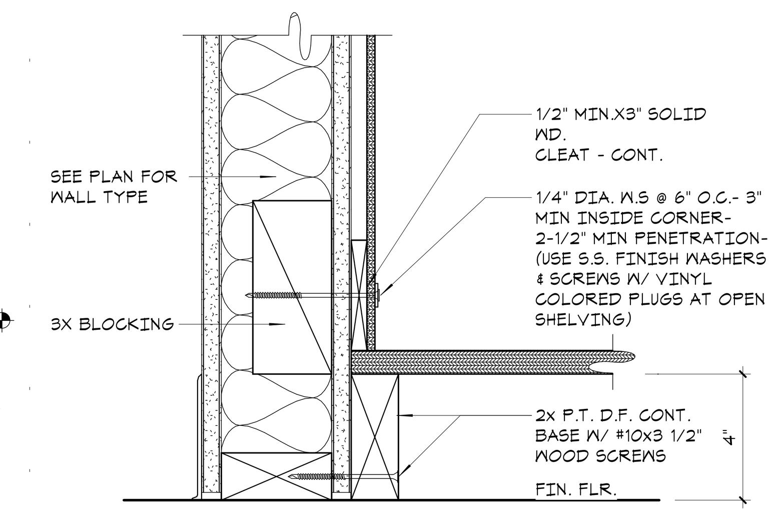

9 AD.03 **BASE CABINET LOWER ANCHOR**
3" = 1'-0"

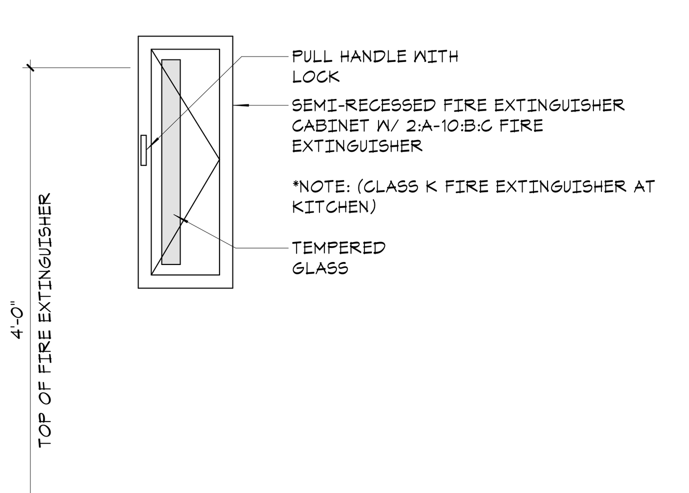

30 AD.03 **FIRE EXTINGUISHER CABINET**
1" = 1'-0"

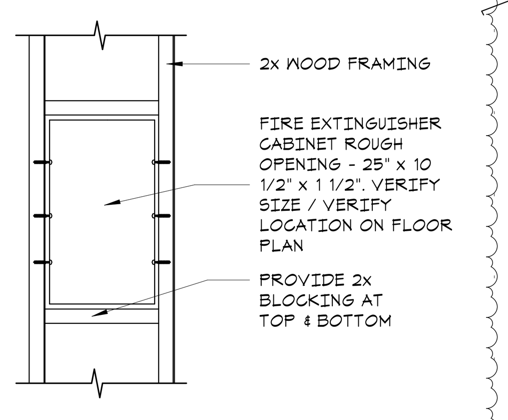

FRAMING ELEVATION

NOTE:
1. PLACE THE HEIGHT OF CABINET SO THAT THE TOP OF THE F.E. HANDLE IS 4'-0" A.F.F.

2. IT IS NOT REQUIRED TO ADD FRAMING IF THE CABINET WIDTH MATCHES THE SPACE BETWEEN THE STUDS OR IF 1 1/2" OF SHIM ON ONE SIDE WILL FILL THE SPACE ALONG WITH THE CABINET. INCREASE THE LENGTH OF THE SCREWS TO ADJUST FOR THE THICKNESS OF THE SHIM.

25 AD.03 **FIRE EXTINGUISHER CAB. FRAMING**
1" = 1'-0"

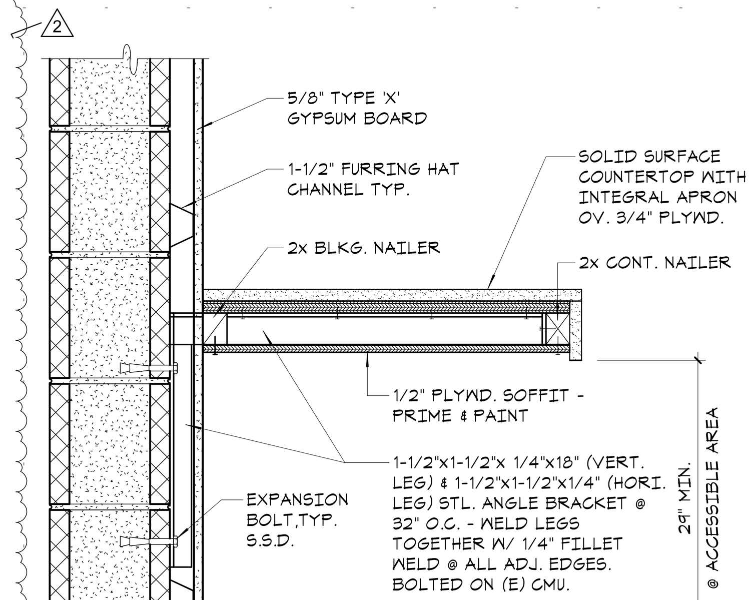

20 AD.03 **COUNTER AT FURRED CMU WALL**
1 1/2" = 1'-0"

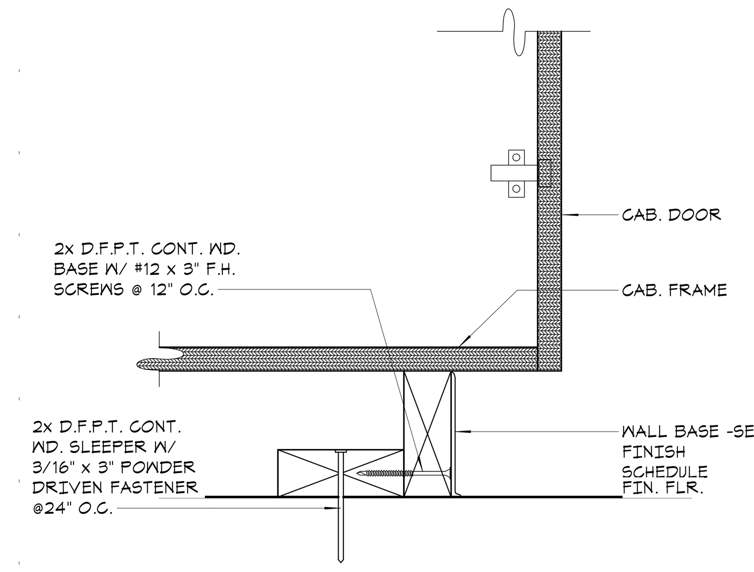

10 AD.03 **BASE CABINET @ TOE KICK**
3" = 1'-0"

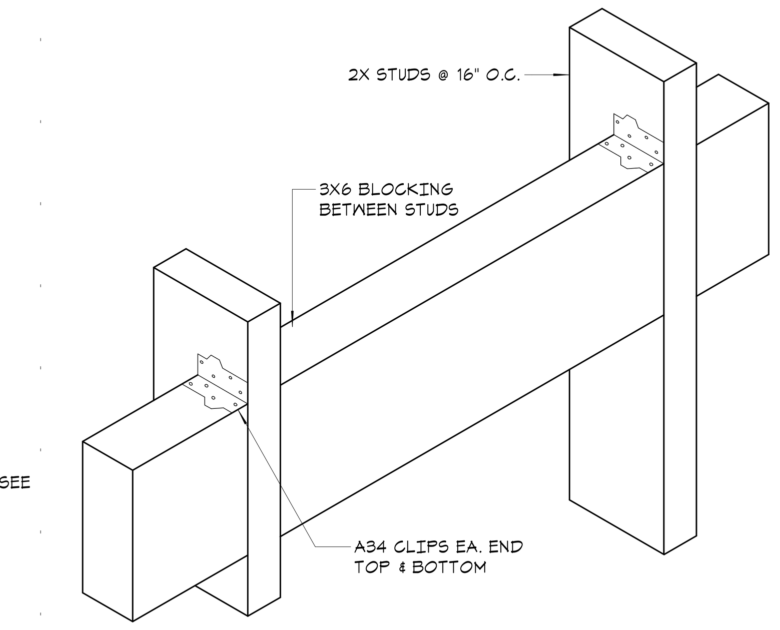

5 AD.03 **WOOD BLOCKING DETAIL**
1" = 1'-0"

LDA
DESIGNERS & ARCHITECTS

Architect:
LDA Partners, Inc.
Designers & Architects
222 Central Court
Stockton, CA 95204
209.943.0405
www.ldapartners.com

LICENSED ARCHITECT
ERIC WILLIAM WOHLE
C28388
September 2021
STATE OF CALIFORNIA

Client:
LATHROP-MANTECA FIRE PROTECTION DISTRICT
19001 SOMERSTON PARKWAY
LATHROP, CA 95330
209.941.5102

Project:
FIRE STATION 31 UPGRADES

800 J STREET
LATHROP CA 95330

Project No.: 757-01-20
Drawn By: Author
Checked By: Checker

No.	Description	Date	By
1	PLAN CHECK #1 1ST REVIEW CYCLE	10-21-2020	
2	PLAN CHECK #2/ADDENDA #1	12-9-2020	

3RD SUBMITTAL - BLDG. DEPT.

12/9/2020

DETAILS

AD.03

12/9/2020 8:47:28 PM

Table 2304.9.1 - Fastening Schedule C.B.C.

	Connection	Fastening (a.), (m.)
1	JOIST TO SILL OR GIRDER, TOENAIL	3 - 8d common, 3 - 3" x 0.131" nails, 3 - 3" 14 gage staples
2	BRIDGING TO JOIST, TOENAIL EACH END	2 - 8d common, 2 -3 " x 0.131" nails, 2 - 3" 14 gage staples
3	1" x 6" SUBFLOOR OR LESS TO EACH JOIST, FACE NAIL	2 - 8d common
4	WIDER THAN 1" x 6" SUBFLOOR TO EACH JOIST, FACE NAIL	3 - 8d common
5	2" SUBFLOOR TO JOIST OR GIRDER, BLIND AND FACE NAIL	2 - 16d common
6	SOLE PLATE TO JOIST OR BLOCKING, TYPICAL FACE NAIL	16d at 16"oc, 3" x 0.131" nails at 8" oc, 3" 14 gage staples at 12" oc
	SOLE PLATE TO JOIST OR BLOCKING AT BRACED WALL PANELS	3 - 16d at 16", 4 - 3" x 01.31 nails at 16", 4 - 3" 14 gage staples per 16"
7	TOP PLATE TO STUD, END NAIL	2-16d common, 3 - 3" x 0.131" nails, 3 -3" 14 gage staples
8	STUD TO SOLE PLATE, TOENAIL	4 - 8d common, 4 - 3" x 0.131" nails, 3 - 3 " 14 gage staples
	STUD TO SOLE PLATE, END NAIL	2 - 16d common, 3 - 3 " x 0.131" nails, 3 - 3" 14 gage staples
9	DOUBLE STUDS, FACE NAIL	16d at 24" oc, 3" x 0.131" nail at 8" oc, 3" 14 gage staple at 8" oc
10	DOUBLE TOP PLATES, TYPICAL FACE NAIL	16d at 16" oc, 3" x 0.131" nail at 12" oc, 3" 14 gage staple at 12" oc
	DOUBLE TOP PLATES, LAP SPLICE	8 - 16d common, 12 - 3" x 0.131" nails, 12 - 3" 14 gage staples
11	BLOCKING BETWEEN JOISTS OT RAFTERS TO TOP PLATE, TOENAIL	3 - 8d common, 3 - 3" x 0.131" nails, 3 - 3" 14 gage staples
12	RIM JOIST TO TOP PLATE, TOENAIL	8d at 6" oc, 3" x 0.131" nail at 6" oc, 3" 14 gage staple at 6" oc
13	TOP PLATES, LAPS AND INTERSECTIONS, FACE NAIL	2 -16d common, 3 - 3" x 0.131" nail at 6" oc, 3" 14 gage staples
14	CONTINUOUS HEADER , TWO PIECES	16d common 16" oc along edge
15	CEILING JOISTS TO PLATE, TOENAIL	3- 8d common, 5 - 3" x 0.131" nails, 5 - 3" 14 gage staples
16	CONTINUOUS HEADER TO STUD, TOENAIL	4 - 8d common
17	CEILING JOISTS, LAPS OVER PARTITIONS, FACE NAIL	3 - 16d common min. Table 2308.10.4.1, 4 - 3" x 0.131" nails, 4 - 3" 14 gage staples
18	CEILING JOISTS TO PARALLEL RAFTERS, FACE NAIL	3 - 16d common min. Table 2308.10.4.1, 4 - 3" x 0.131" nails, 4 - 3" 14 gage staples
19	RAFTER TO PLATE, TOENAIL	3 - 8d at common, 3 - 3" x 0.131" nails, 3 - 3" 14 gage staples
20	1" DIAGONAL BRACE TO EACH STUD AND PLATE, FACE NAIL	2- 8d common, 2- 3" x 0.131", 3 -3" 14 gage staples
21	1" x 8" SHEATHING TO EACH BEARING, FACE NAIL	3 - 8d common
22	WIDER THAN 1" x 8" SHEATHING TO EACH BEARING, FACE NAIL	3 - 8d common
23	BUILT-UP CORNER STUDS	16d common at 24" oc, 3" x 0.131" nails at 16" oc , 3" 14 gage staples at 16" oc
24	BUILT-UP GIRDER AND BEAMS, FACE NAIL AT TOP AND BOTTOM STAGGERED ON OPPOSITE SIDES	20d common at 32" oc, 3" x 0.131" nail at 24" oc, 3" 14 gage staple at 24" oc
	BUILT-UP GIRDER AND BEAMS, FACE NAIL AT ENDS AND AT EACH SPLICE	2 - 20d common, 3 - 3" x 0.131" nails, 3 - 3" 14 gage staple
25	2" PLANKS, AT EACH BEARING	16d common
26	COLLAR TIE TO RAFTER, FACE NAIL	3 - 10d common, 4 - 3" x 0.131" nails, 4 - 3" 14 gage staples
27	JACK RAFTER TO HIP, TOENAIL	3 - 10d common, 4 - 3" x 0.131" nails, 4 - 3" 14 gage staples
	JACK RAFTER TO HIP, FACE NAIL	2 -16d common, 3 - 3" x 0.131" nails, 3 - 3" 14 gage staples
28	ROOF RAFTER TO 2-BY RIDGE BEAM, TOENAIL OR FACE NAIL	2 -16d common, 3 - 3" x 0.131" nails, 3 - 3" 14 gage staples
29	JOIST TO BAND JOIST, FACE NAIL	3 -16d common, 4 - 3" x 0.131" nails, 4 - 3" 14 gage staples
30	LEDGER STRIP, FACE NAIL	3 -16d common, 4 - 3" x 0.131" nails, 4 - 3" 14 gage staples
31	WOOD STRUCTURAL PANELS AND PARTICLEBOARD, SUBFLOOR, ROOF AND WALL SHEATHING (TO FRAMING)	
	1/2" AND LESS	6d , 2 3/8" X 0.113" nail , 1 3/4" 16 gage
	19/32" TO 3/4"	8d com. or 6d def., 2 3/8" X 0.113" nail 4" oc at edge 8" oc field, 2" 16 gage 4" , 8" oc
	7/8" TO 1"	8d common or deformed shank
	1 1/8" TO 1 1/4"	10d or 8d common
	WOOD STRUCTURAL PANELS AND PARTICLEBOARD, SINGLE FLOOR (COMBINATION SUBFLOOR-UNDERLAYMENT TO FRAMING)	
	3/4" AND LESS	6d deformed shank
	7/8" TO 1"	8d deformed shank
	1 1/8" TO 1 1/4"	10d common or 8d deformed
32	PANEL SIDING (TO FRAMING) - 1/2" OR LESS	6d Corrosion-resistant siding or casing nail
	PANEL SIDING (TO FRAMING) - 5/8"	8d Corrosion-resistant siding or casing nail
33	FIBERBOARD SHEATHING - 1/2"	1 1/2" 11 gage roofing nail , 6d common nail, 1 1/8" 16 gage staple
	FIBERBOARD SHEATHING - 25/32"	1 3/4" 11 gage roofing nail , 8d common nail, 1 1/2" 16 gage staple
34	INTERIOR PANELING - 1/4"	4d Casing or finish nails spaced 6" on panel edges, 12" at intermediate supports
	INTERIOR PANELING - 3/8"	6d Panel supports at 24". Casing or finish nails spaced 6" at edges, 12" at intermediate

Structural Steel:

1. Structural steel members shall conform to the following minimum standards and material properties

Shape	Standard/Grade	Fy
W,WT	ASTM A992 Grade 50	50 ksi
Channels & Angles	ASTM A36	36 ksi
Bars and Plates	ASTM A36	36 ksi
HSS (round)	ASTM A500 (Grade B)	42 ksi
HSS (rectangular)	ASTM A500 (Grade B)	46 ksi
Cold Formed Shapes	ASTM A570	33 ksi
Bolts	ASTM A325	--
Nuts	ASTM A563	--
Hardened Steel Washers	ASTM F436	--
Load Indicator Washers	ASTM F959	--
Anchor Bolts	ASTM F1554	36 ksi
Shear Studs	ASTM A108 (type B)	--
Threaded Rod	ASTM A36	36 ksi
	ASTM F959	
	ASTM F1554	
	ASTM A108 (type B)	

2. All bolts shall be installed as bearing type connections with the threads included in shear planes (type "N" connection unless otherwise noted). All high strength bolts shall be fully pretensioned using load indicator washers or appropriate torque wrench. Foundation anchor bolts do not need to be pretensioned.
3. All galvanized bolts and nuts shall be of the same process as specified in the plans. Mixing of hot dipped galvanized bolts with mechanically galvanized nuts is prohibited.
4. All structural and miscellaneous steel shall be fabricated and erected in accordance with the latest edition of AISC specifications for design, fabrication and erection.
5. Welding shall be performed by welders holding valid certificates and having current experience in the type of welding shown on the plans. All welding shall use E70XX low hydrogen electrodes or 70ksi weldable wire unless otherwise noted on the plans. Shop welding may use 70ksi weldable wire. All welds involving reinforcing bars shall use E7018 electrodes. All welding shall conform to the latest edition of American Welding Society Standards. No tack welding of ASTM A325 or ASTM A490 bolts.
6. Grout beneath column bases or bearing plates shall be 5,000 psi (min) non-shrink flowable grout or drypack. Install grout under bearing plates before framing members are installed have been plumbed but prior to floor or roof installation. Grout depth shall be sufficient to allow grout or drypack to be placed beneath plate without voids (1-1/2" typical).

Foundation:

1. Excavations and soil work, including all required inspections during construction, shall comply with the requirements of CBC Chapter 18.
2. Geotechnical parameters used for foundation design:
   - Allowable Net Soil Beaing..............................1500 psf
   - Coeficient of Friction.......................................0.25
   - Passive Soil Resistance....................................100 pcf
   - Active Soil Pressure..45 pcf
3. All footings shall extend below grade the minimum embedment depth as noted on plans. Grade shall be defined as the lowest of the following:
   - building pad subgrade
   - lowest surrounding soil grade within 5'-0" of the building
4. Conventional concrete slabs on grade shall be supported per the Geotechnical Report if provided. Fill material or subgrade material shall be moistened, but not saturated, prior to concrete placement. Care shall be taken as to not damage the integrity of the fill or subgrade material/preparation.
5. Backfilling against foundation walls or exterior walls shall not commence until after the top of the walls are restrained by the completed floor or roof systems.
6. Adequate drainage away from structural wall or foundation shall be provided by Contractor as required.
7. Backfill and re-compaction of all trenches prior to any construction above or adjacent to trench is to be done per soils report (min. 90% compaction).
8. Foundation excavations should be properly prepared in accordance with the recommendations of the geotechnical engineer. All footing and pier excavations should be observed by a representative of of the geotechnical engineer prior to placement of reinforcing steel, in order to examine competency of soils.

Concrete Masonry Units

1. Masonry material specifications are as follows:
   a. Concrete Masonry Units
      ASTM C90, Grade N-1, f'm = 3,000 psi
   b. Mortar - ASTM C270 Type M or S
      compressive strength = 1,800 psi (min. at 28 days)
   c. Grout - ASTM C476
      compressive strength = 2,000 psi (min. at 28 days)
2. Units shall be two cell, smooth face block as specified on the design drawings. Concrete bond beams shall be used at horizontal reinforcement. Block shall be cured no less than 28 days before being placed in wall.
3. Slump shall be 8"-11", and no water reducers allowed. Total weight of cementitious materials in the mix shall not exceed 610 pounds, and Portland Cement may be replaced with up to 40% fly ash, or a combination of 70% fly ash and ground granulated blast-furnace slag.
4. All cells and spaces shall be fully grouted.
5. Cleanouts shall be provided for all grout pours over 5' high.
6. All block shall be laid up in mortar with full head and bed joints. Webs of each course shall center on webs of courses below. Block shall be laid in running bond with tooled concave joints.
7. Grout shall be fluid and flowable and shall flow into all joints of masonry without segregation. Do not use coarse grout where dimension of cell is less than 4". Mechanical vibration shall be used to consolidate the grout under strict control to prevent segregation of grout components.
8. Provide a minimum of 1/2" of grout space between reinforcing bars and surface of masonry units.
9. Vertical control joints (isolation or expansion joints) shall be placed every 40'-0" O.C. (max.). Joint sealant shall be as specified on design drawings.
10. Heights of grout lifts and grout pours shall be in accordance with TMS 602, Specification for Masonry Structures.
11. Pipes and conduits embedded in masonry shall not be placed without approval by the engineer.
12. Admixtures may not be used unless approved by the purchaser, or acceptable (per TMS 602), or approved by the enforcement agency.

Reinforcing Steel:

1. Reinforcing steel shall conform to the requirements of ASTM 615. Reinforcing steel shall be Grade 60 (Fy = 60 ksi) deformed bars for all bars #4 and larger including bars used for concrete walls, beams or columns. Reinforcing may be grade 40 (Fy = 40 ksi) deformed bars for all bars #3 and smaller unless otherwise noted on plans. Reinforcing shall be bent cold. Bars are allowed only one bend per detail, no straightening and re-bending is allowed.
2. Lap splices of reinforcing steel in concrete shall be according to ACI 318 Chapter 25 or lap schedule where present, unless otherwise noted. Stagger splices a minimum of one lap length. No tack welding of reinforcing bars is allowed. The latest ACI code and detailing manual apply. Provide bent corner bars to match and lap with horizontal bars at all corners and intersections per typical details. Vertical bars shall be spliced at or near floor lines. Splice top bars at center line of span and bottom bars at the support in spandrels, beams, grade beams, etc., unless otherwise noted.
3. Mechanical splice couplers shall have current ICBO approval and shall be capable of developing 125% of the bar strength.
4. Welding of reinforcing bars, metal inserts, and connections shall conform to AWS D.4, and shall be made only at locations shown on the plans or details. All reinforcing to be welded shall be ASTM A706, Grade 60 weldable steel.
5. Reinforcing bar spacing shown on plans are maximum on centers. All bars shall be detailed and placed per CRSI specifications handbook. Securely tie all bars in location prior to concrete placement.

Concrete:

1. Min. 28 day compressive strength
   Slabs on Grade . . . . 2500 psi
   Footing . . . . 2500 psi
   Max. Water to Cement Ratio 0.50
   Concrete Slump . . . . 4"-6"
2. Concrete mix designs shall be done by a certified laboratory and approved by the Engineer.
3. All concrete shall be regular weight of 145-150 pounds per cubic foot using aggregates conforming to ASTM C33. Water shall be clean and potable.
4. Portland Cement shall be Type II and conform to ASTM C150.
5. No more than 90 minutes shall elapse between concrete batching and placement, unless approved by Engineer or Authorized Testing Agency.
6. Concrete mixing, transport, & placement shall be per ACI 304. Mechanically vibrate all concrete as necessary when placed to achieve a uniform placement minimizing voids. Remove all debris from forms before placing concrete. Concrete shall not be allowed to be dropped through reinforcing steel or greater than 5 feet or any situation that may adversely affect the air entrainment or structural properties of the concrete. Care must be taken when placing slabs on grade as to not disturb the subgrade material.
7. All items to be cast in concrete such as reinforcing steel, ducts, anchor bolts, dowels, pipes, sleeves, conduits, etc., shall be securely fastened to prevent movement during the concrete placement.
8. Concrete slab on grade control joints shall be placed such that the enclosed area is less than 150 square feet(~12' x 12'), unless otherwise stated on plans or an approved mix design allowing greater enclosed area is approved.
9. Pipes shall not be embedded in structural concrete unless stated on the plans or approved by the Engineer. Maximum pipe size shall be 1/3 of the slab thickness, located at mid-depth. Minimum spacing shall 3 times the pipe diameter. Pipes/sleeves shall not impair the strength of the member.
10. Protect concrete from hot or cold weather conditions, which can reduce strength or damage concrete, in accordance with ACI 305 and 306.
11. Anchor bolts for general use and at hold down locations shall be ASTM F1554 Gr. 36 bolts, with A563 Grade A heavy hex nuts & F436 Type I washers.

Wood

1. Sawn framing lumber shall comply w/ the latest edition of the grading rules of Western Wood Products Association or the West Coast Lumber Inspection Bureau. All sawn lumber shall be stamped with the grade mark of an approved lumber grading agency. Sawn lumber shall have the following minimum grade (UNO):

Size	Species & Grade
2x4 studs, blocking & top plates	Douglas Fir/Larch, No. 2
2x6 studs, blocking & top plates	Douglas Fir/Larch, No. 2
Joists and all other sawn lumber	Douglas Fir/Larch, No. 1
4x posts	Douglas Fir/Larch, No. 2
6x posts	Douglas Fir/Larch, No. 2

2. Glued-Laminated beams (GLB) shall be Douglass Fir Combination 24F-V4 at simple span beams and 24F-V8 at cantilever and multi-span beams, UNO, and shall have the minimum properties:

   Fb = 2,400 psi Fv = 190 psi Fc(Perpendicular) = 650 psi E = 1,800 ksi

   Fabrication and handling shall comply with the latest AITC and ASTM standards. Beams shall be manufactured with 2000' radius min. camber unless specifically noted on the plans. All laminations shall be 1-1/2" thick (min.).
3. Structural-use panels shall be performance rated by the American Plywood Association (APA). Panels shall comply with I.C.B.O. report No. NER-108, Exposure 1. Install per manufacturer's recommendations. Structural-use panels shall conform to IBC standard 23-2 and 23-3. Plywood shall be five-ply sheathing lay up plywood with face grain perpendicular to supports. Plywood shall be oriented per shearwall schedule. Oriented strand board (OSB) may be used as an alternate to plywood. Provide blocking at panel edges where indicated on plans. Panels shall conform to the following nominal thickness, span rating and nailing pattern unless noted otherwise:

Thickness	Grade/ Materials	Use	Span Rating	Edge Nailing	Field Nailing
1/4"	rated sheathing	walls	-	6d @ 6" O.C.	6d @ 12" O.C.
3/8"	rated sheathing	walls	-	8d @ 6" O.C.	8d @ 12" O.C.
7/16"	rated sheathing	walls/roof	24/16	8d @ 6" O.C.	8d @ 12" O.C.
15/32"	rated sheathing	walls/roof	32/16	8d @ 6" O.C.	8d @ 12" O.C.
1/2"	rated sheathing	walls/roof	32/16	8d @ 6" O.C.	8d @ 12" O.C.
19/32"	rated sheathing	roof	40/20	10d @ 6" O.C.	10d @ 12" O.C.
5/8"	rated sheathing	roof	40/20	10d @ 6" O.C.	10d @ 12" O.C.
3/4" R	rated sheathing	roof	48/24	10d @ 6" O.C.	10d @ 12" O.C.
3/4" F	Structural I	floor	48/24	10d @ 6" O.C.	10d @ 12" O.C.

4. Bottom plates resting on concrete or masonry shall be pressure treated douglas fir sole plates and shall be anchored per structural details and shear wall schedule.
5. All bolts shall be installed in holes bored with a bit 1/16" larger than the diameter of the bolt. Bolts and nuts seating on wood shall have washers as specified by the plans under the nut. Ding threads or install additional nut to prevent loosening of nuts. Lag bolts shall be installed in pre-drilled holes with wrench.
6. All exterior wood for the vision screen shall be pressure treated. All sheathing shall be exterior grade.
7. Any location calling out a 16d nail may be substituted for a #8 wood screw of the same length unless otherwise noted except for Simpson connections.
8. All light framing connections shall be per CBC table 2304.10.1, unless otherwise stated on the plans.

Special Inspections:

Special Inspection shall be performed by qualified firm independent of the Contractor, Architect, Engineer of Record or Owner according to 2019 CBC Chapter 17. The Special Inspector shall observe the below list of items for conformance with the Contract Documents. The Special Inspector shall send reports to the Owner and all applicable parties. All discrepancies shall be brought to attention of the Contractor for correction. The Special Inspector shall submit a final report stating that the special inspection work, to the best of his knowledge, was performed in compliance with the plans, specifications, Codes and applicable workmanship of the CBC. Special Inspection shall be provided for the below list of items:

	Required Inspections	Periodic	Continuous
1.	Epoxy Anchors and/or Rebar	✔	
2.	Diaphragm Construction & Nailing - 2-1/2" Spacing	✔	
3.	Shotcrete Compression Tests	✔	

Sheet List

Number	Sheet Number	Sheet Name
1	S0.0	Structural Notes
2	S1.0	Structural Floor Plan
3	S2.0	Foundation Plan
4	S3.0	(N) Ceiling Framing Plan
5	S3.1	Ceiling Framing Details
6	S4.0	Roof Framing Plan
7	S4.1	Structural Roof Reinf. Plan & Details
8	S5.0	Building Section C
9	S5.1	Roof Framing Details
10	S6.0	Building Section D
11	S7.0	Tower Plan
12	S8.0	Exterior Shotcrete Reinf. Walls
13	S9.0	CMU Wall Details

DESIGNERS & ARCHITECTS

Architect:
LDA Partners, LLP
Designers & Architects
222 Central Court
Stockton, CA 95204
209.943.0405
www.ldapartners.com

Client:
LATHROP-MANTECA FIRE PROTECTION DISTRICT
19001 SOMERSTON PARKWAY
LATHROP, CA 95330
209.941.5102

Project:
FIRE STATION 31 UPGRADES

800 E J STREET
LATHROP, CA 95330

Project No.: 20086
Drawn By: CM
Checked By: DEW

No. Description Date By

3RD-SUBMITTAL - BLDG. DEPT.
12/9/2020

Structural Notes

S0.0

12/9/2020 3:11:03 PM

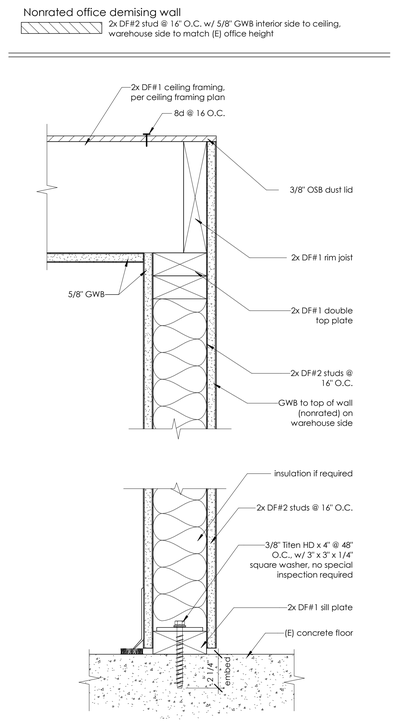

7 S1.0 **Wall to Ceiling Interface Detail**
3" = 1'-0"

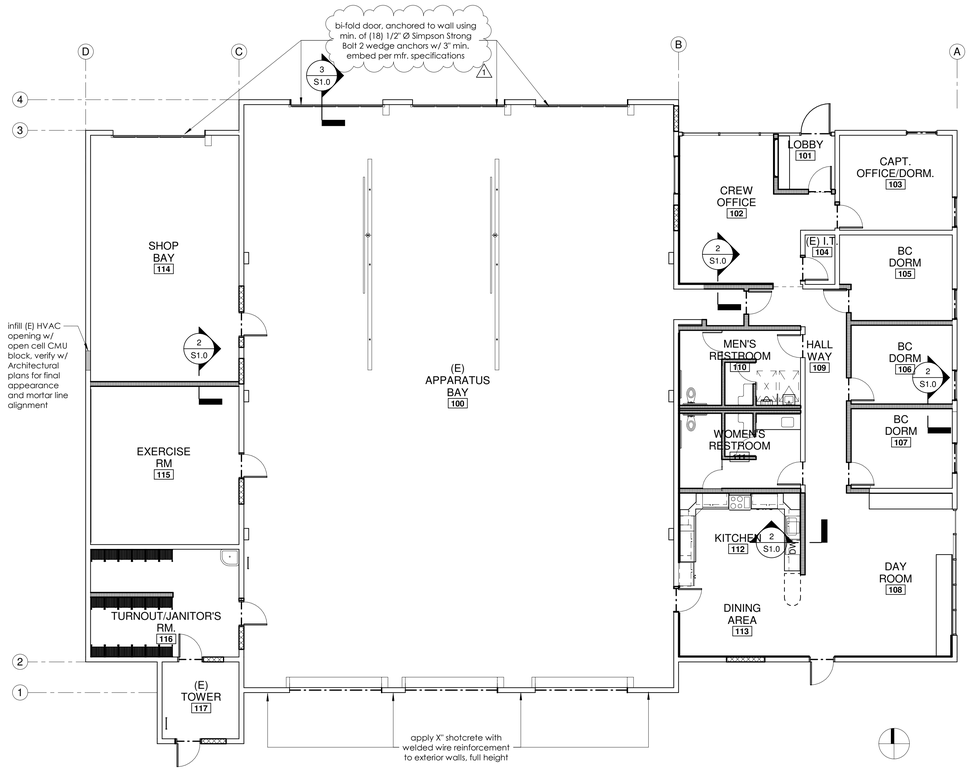

1 S1.0 **Structural Floor Plan**
1/8" = 1'-0"

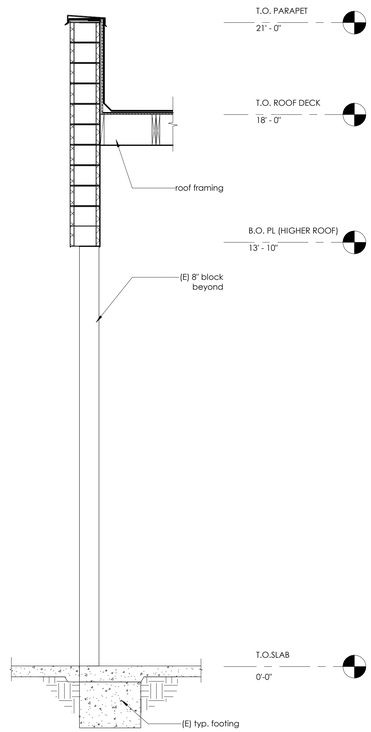

6 S1.0 **Typical Wall Section**
1/2" = 1'-0"

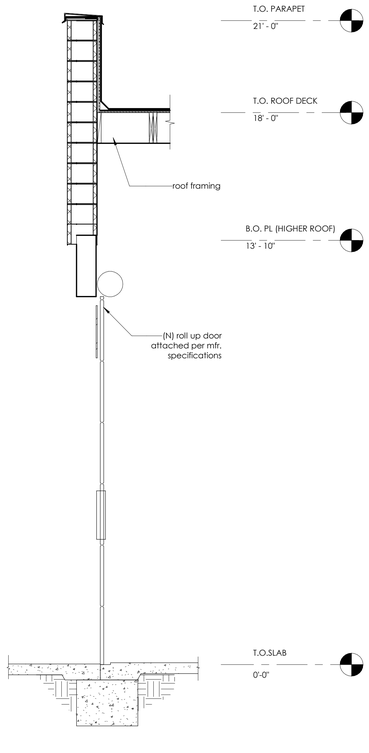

3 S1.0 **Roll-Up Door section**
1/2" = 1'-0"

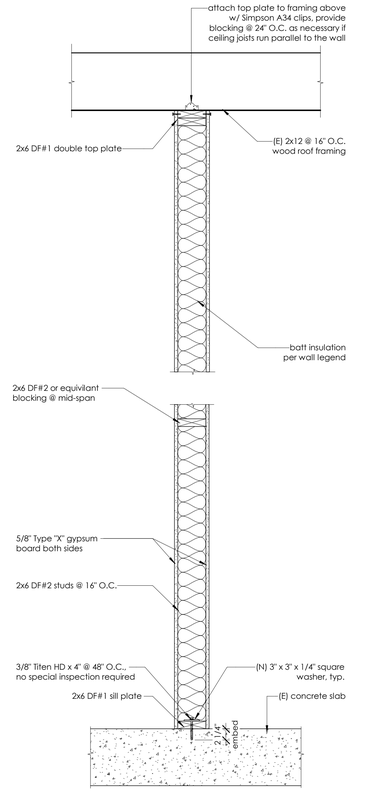

2 S1.0 **Typical Demising Wall Section**
1" = 1'-0"

LDA
DESIGNERS & ARCHITECTS

Architect:
LDA Partners, LLP
Designers & Architects
222 Central Court
Stockton, CA 95204
209.943.0405
www.ldapartners.com

Client:
LATHROP-MANTECA FIRE PROTECTION DISTRICT
19001 SOMERSTON PARKWAY
LATHROP, CA 95330
209.941.5102

Project:
FIRE STATION 31 UPGRADES

800 E J STREET
LATHROP, CA 95330

Project No.: 20086
Drawn By: CM
Checked By: DEW

No.	Description	Date	By
1	review cycle-1	11/16/2020	TAE

3RD-SUBMITTAL - BLDG. DEPT.
12/9/2020

Structural Floor Plan

S1.0

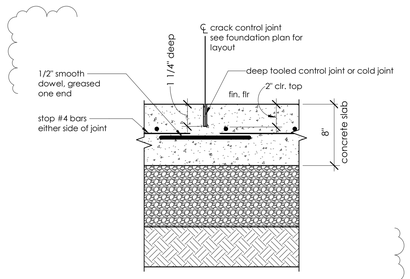

6 S2.0 **Typical Slab Expansion Joint**
1 1/2" = 1'-0"

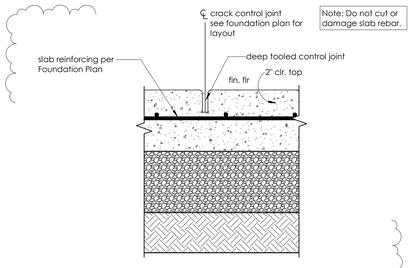

5 S2.0 **Typical Slab Crack Control Joint (C.C.J.)**
1 1/2" = 1'-0"

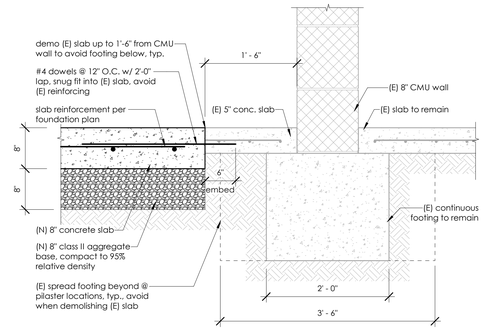

4 S2.0 **Typical Perimeter Footing**
1" = 1'-0"

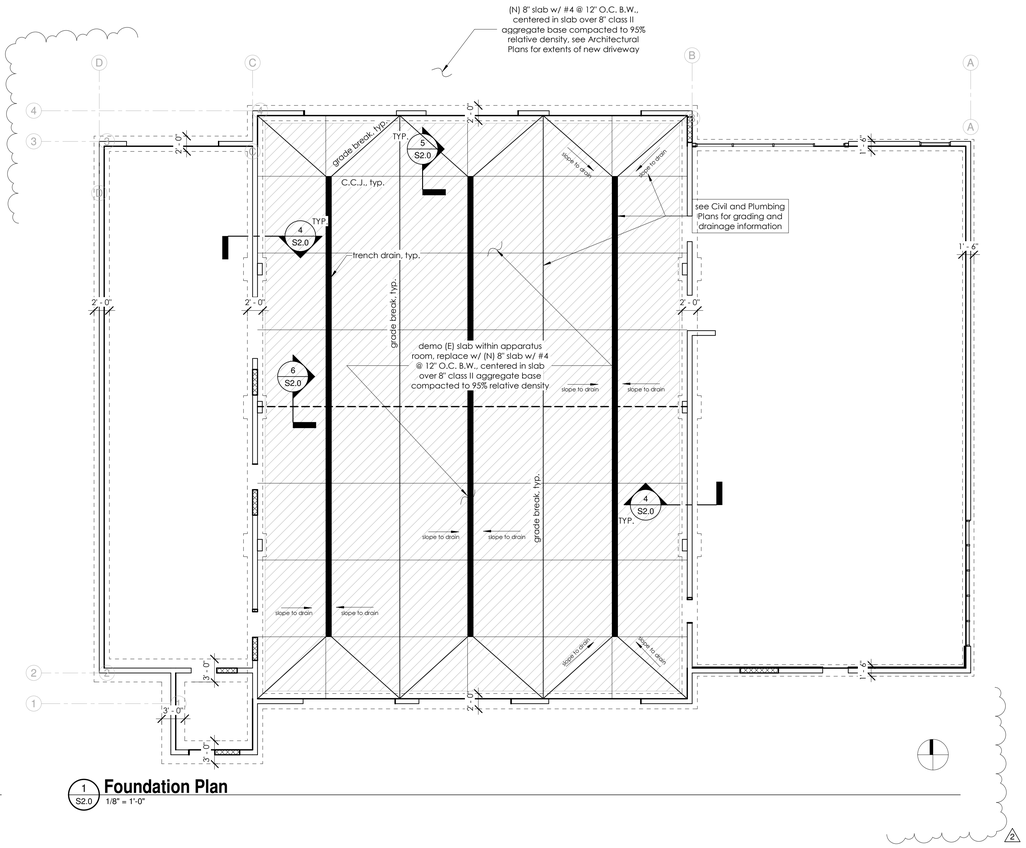

1 S2.0 **Foundation Plan**
1/8" = 1'-0"

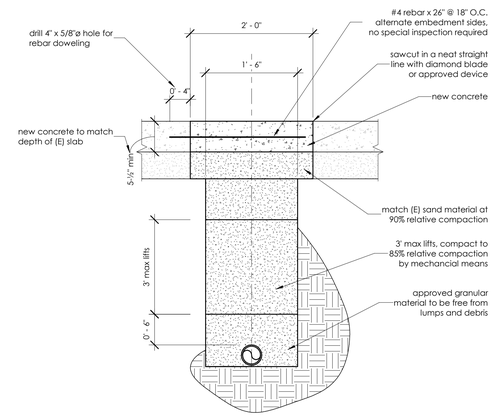

3 S2.0 **Trench Detail for Interior Pipes**
1" = 1'-0"

NOTES

1. Sleeves shall be PVC. Inner diameter to be 2" larger than pipe outer diameter
2. Plumbing embedded in concrete shall be provided w/ felixble couplings @ entry & exit points
3. "Pipe" = any penetration thru foundation to allow for 1" of motion in any direction
4. No "pipe" to run parallel in footings
5. Wrapped pipes shall have 1 1/2" clear from wrapping to reinforcing. Sleeved pipes shall have 1 1/2" min. clearance to reinforcing. Wrap w/ 1/8" foam sheet, 3 layers min. sleeved pipes per notes.
6. Clearance between "pipes" shall be 6" when 4 or more "pipes" are gouped in one area - provide engineered details of block-out

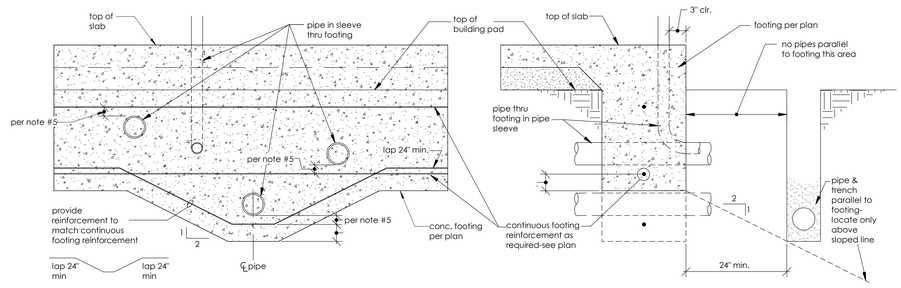

2 S2.0 **Pipe Through Footing Detail Where Applies**
3/8" = 1'-0"

LDA
DESIGNERS & ARCHITECTS

Architect:
LDA Partners, LLP
Designers & Architects
222 Central Court
Stockton, CA 95204
209.943.0405
www.ldapartners.com

Client:
LATHROP-MANTECA FIRE PROTECTION DISTRICT
19001 SOMERSTON PARKWAY
LATHROP, CA 95330
209.941.5102

Project:
FIRE STATION 31 UPGRADES

800 E J STREET
LATHROP, CA 95330

Project No.: 20086
Drawn By: Author
Checked By: Checker

No.	Description	Date	By
2	Plan Check #2 Addenda #1	12/02/2020	TAE

3RD-SUBMITTAL - BLDG. DEPT.
12/9/2020

Foundation Plan

S2.0

1 S3.0 **(N) Ceiling Framing Plan**
1/4" = 1'-0"

LDA
DESIGNERS & ARCHITECTS

Architect:
LDA Partners, LLP
Designers & Architects
222 Central Court
Stockton, CA 95204
209.943.0405
www.ldapartners.com

Client:
LATHROP-MANTECA FIRE PROTECTION DISTRICT
19001 SOMERSTON PARKWAY
LATHROP, CA 95330
209.941.5102

Project:
FIRE STATION 31 UPGRADES

800 E J STREET
LATHROP, CA 95330

REGISTERED PROFESSIONAL ENGINEER
DOUGLASS E. WAGNER
C 76053
EXP 12/31/20
CIVIL
STATE OF CALIFORNIA

Project No.: 20086
Drawn By: Author
Checked By: Checker

No.	Description	Date	By
1	review cycle-1	11/16/2020	TAE
2	Plan Check #2 Addenda #1	12/02/2020	TAE

3RD-SUBMITTAL - BLDG. DEPT.
12/9/2020

(N) Ceiling Framing Plan

S3.0

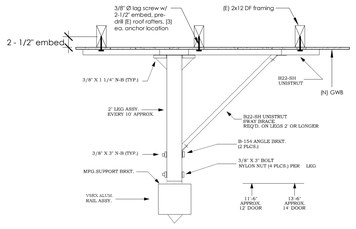

STD. SUPPORT LEG
VSRX

9 S3.1 Plymovent Rails Connection
1 1/2" = 1'-0"

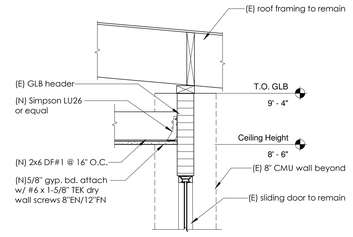

8 S3.1 Ceiling Attachment to Header
1" = 1'-0"

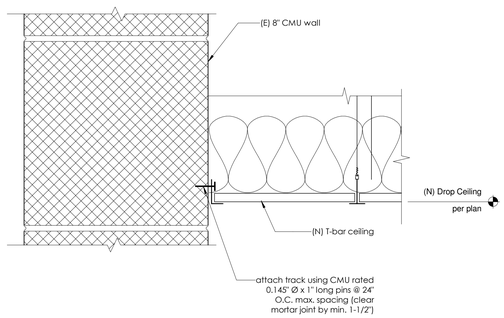

7 S3.1 Ledger Section @ Drop Ceiling
3" = 1'-0"

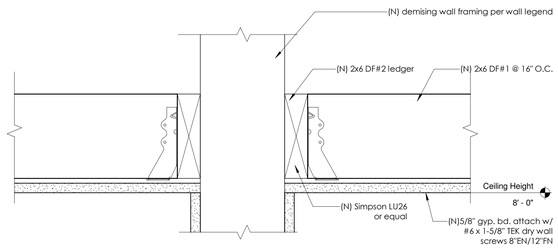

6 S3.1 Joist to Demising Wall
3" = 1'-0"

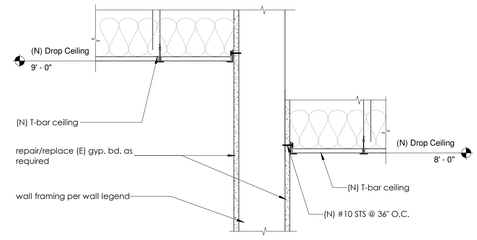

1 S3.1 Ceiling Ledger Detail
1 1/2" = 1'-0"

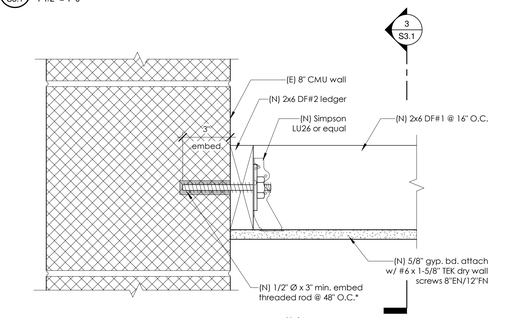

Notes:
*Install in grouted cells only (~48" O.C.), if empty cells are encountered then install using Simpson SET-XP epoxy system, provide anchor screen tubes were un-grouted blocks are encountered

2 S3.1 Ledger Section @ Hard Lid
3" = 1'-0"

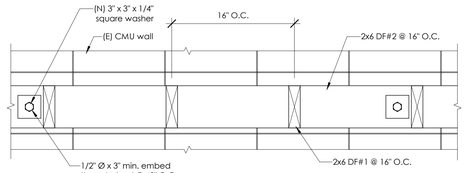

3 S3.1 Joist to Ledger Connection
1 1/2" = 1'-0"

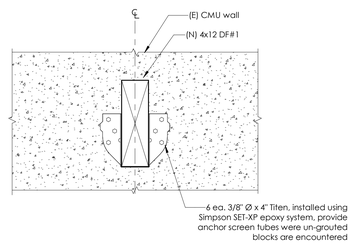

4 S3.1 Girder to CMU Wall Connetion
1 1/2" = 1'-0"

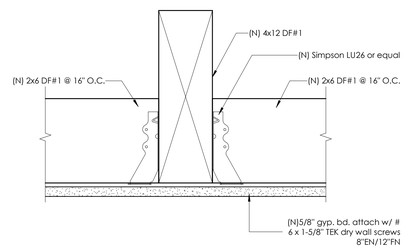

5 S3.1 Girder Section
3" = 1'-0"

LDA DESIGNERS & ARCHITECTS

Architect:
LDA Partners, LLP
Designers & Architects
222 Central Court
Stockton, CA 95204
209.943.0405
www.ldapartners.com

Client:
LATHROP-MANTECA FIRE PROTECTION DISTRICT
19001 SOMERSTON PARKWAY
LATHROP, CA 95330
209.941.5102

Project:
FIRE STATION 31 UPGRADES

800 E J STREET
LATHROP, CA 95330

REGISTERED PROFESSIONAL ENGINEER DOUGLASS E. HARNER C 78093 EXP 12/31/20 CIVIL STATE OF CALIFORNIA

Project No.: 20086
Drawn By: Author
Checked By: Checker

No.	Description	Date	By
1	review cycle-1	11/16/2020	TAE

3RD-SUBMITTAL - BLDG. DEPT. 12/9/2020

Ceiling Framing Details

S3.1

PM 10:11:03/2020

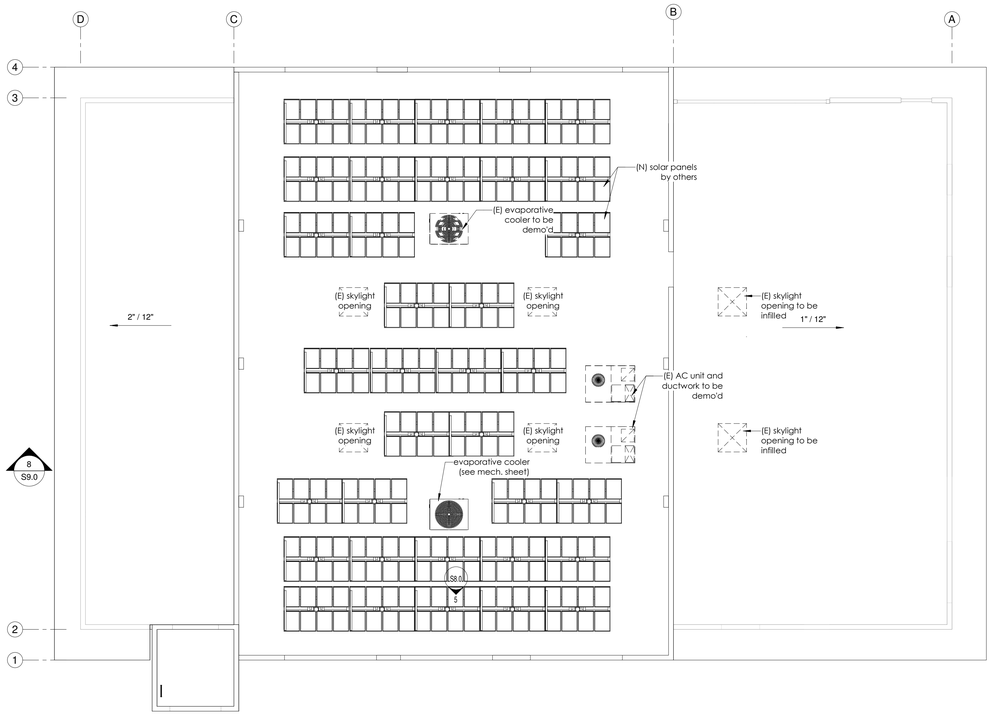

4 S4.0 **Roof Plan**
1/8" = 1'-0"

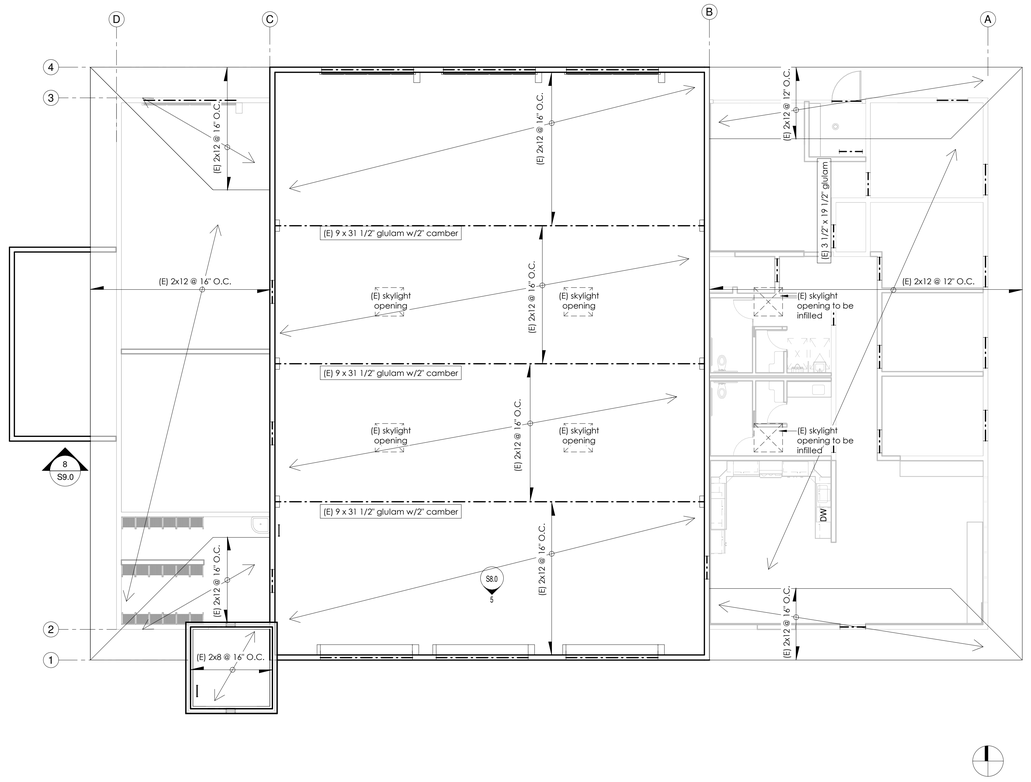

1 S4.0 **(E) Roof Framing Plan**
1/8" = 1'-0"

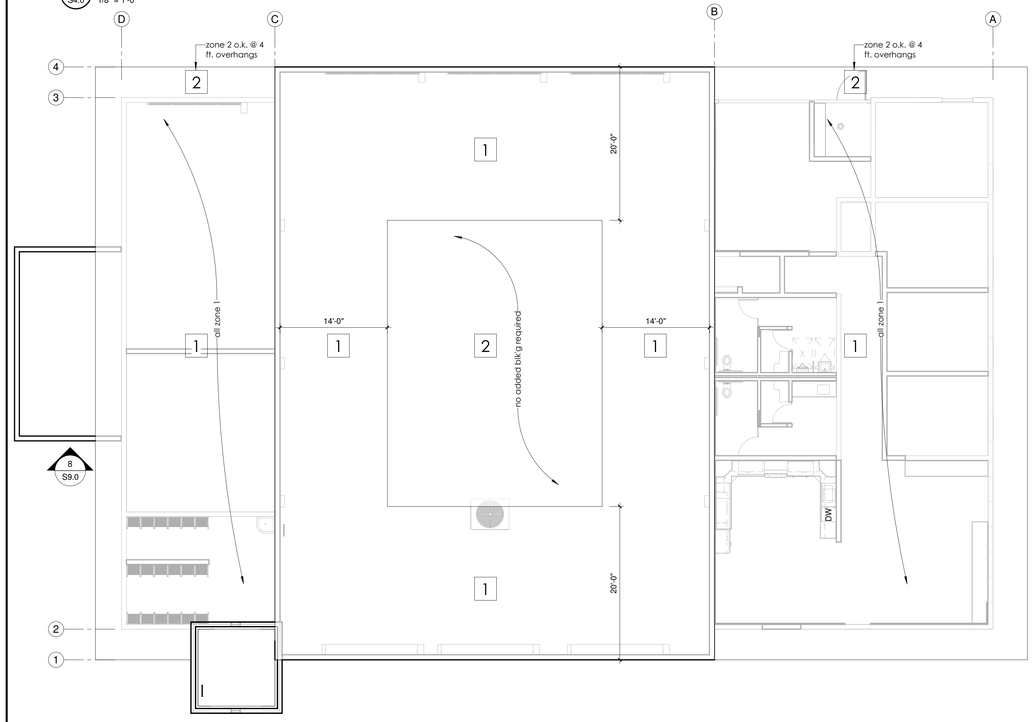

3 S4.0 **Roof Shear Zone Plan**
1/8" = 1'-0"

(N) Roof Nailing Schedule

Zone	Boundary	Cont. Edge	Edge	Field	Allowable Shear	Remarks
1	2" O.C.	2 1/2" O.C.	4" O.C.	12" O.C.	530 lb/ft	provide (N) 2x4 flat blocking @ panel edges as req'd. typ. U.N.O.
2	N/A	6" O.C.	6" O.C.	12" O.C.	240 lb/ft	

Contractor shall verify and/or provide these minimum nailing schedules & blocking as req'd.
The existing roof sheathing is to remain. Provide additional nails per new roof nailing schedule.

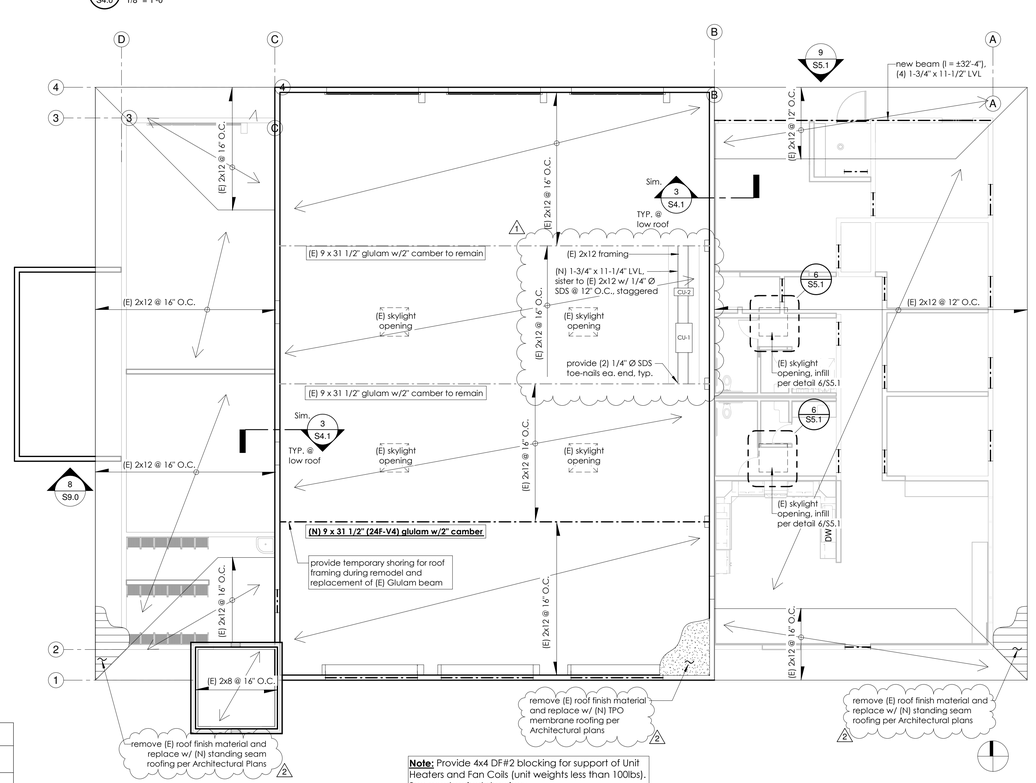

Note: Provide 4x4 DF#2 blocking for support of Unit Heaters and Fan Coils (unit weights less than 100lbs). See mechanical drawings.

2 S4.0 **(N) Roof Framing**
1/8" = 1'-0"

LDA DESIGNERS & ARCHITECTS

Architect:
LDA Partners, LLP
Designers & Architects
222 Central Court
Stockton, CA 95204
209.943.0405
www.ldapartners.com

Client:
LATHROP-MANTECA FIRE PROTECTION DISTRICT
19001 SOMERSTON PARKWAY
LATHROP, CA 95330
209.941.5102

Project:
FIRE STATION 31 UPGRADES

800 E J STREET
LATHROP, CA 95330

REGISTERED PROFESSIONAL ENGINEER KIRK N. ELLIS S 2214 EXP. 12-31-21 STRUCTURAL STATE OF CALIFORNIA

REGISTERED PROFESSIONAL ENGINEER DOUGLASS E. WAGNER C 76093 EXP. 12/31/20 CIVIL STATE OF CALIFORNIA

Project No.: 20086
Drawn By: CM
Checked By: Checker

No.	Description	Date	By
1	review cycle-1	11/16/2020	TAE
2	Plan Check #2 Addenda #1	12/02/2020	TAE

3RD-SUBMITTAL - BLDG. DEPT.
12/9/2020

Roof Framing Plan

S4.0

12/9/2020 3:11:14 PM

Notes:
- Predrill all nails & fasteners into (E) wood as req'd
- Typ. details shall be provided at all sim. conditions whether specifically referenced or not. Coord. all as req'd by contractor.

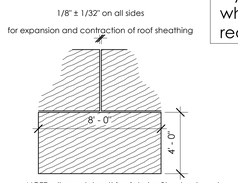

NOTE: all panel sheathing is to be Structural grade sheathing with 24" max. span - see 2016 CBC Table 2304.8(1)

13 S4.1 Typ. Roof Sheathing Detail
1/4" = 1'-0"

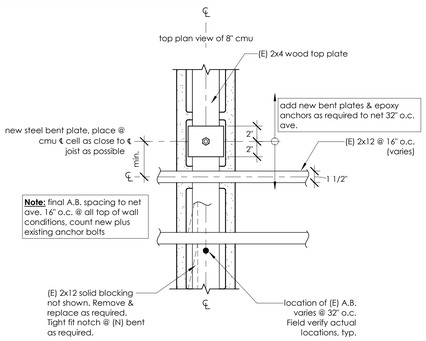

12 S4.1 Typ. Plan View Detail @ 2x4 Wood Top Plate
1 1/2" = 1'-0"

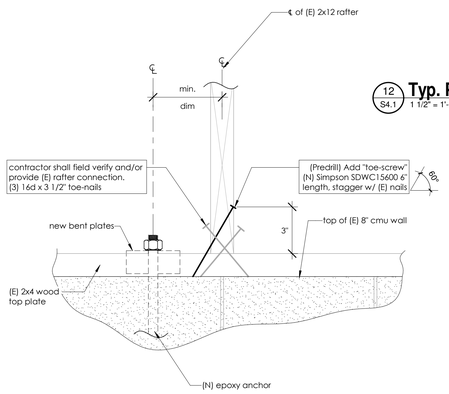

11 S4.1 Typical 2x12 Conn. to (E) 2x4 Top Plate (all locs.)
3" = 1'-0"

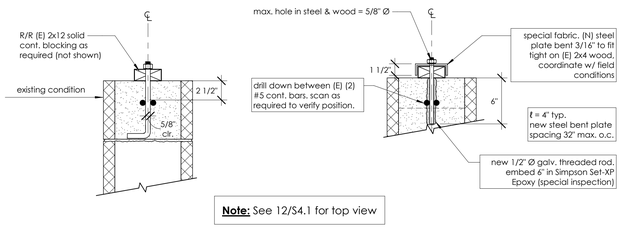

Note: See 12/S4.1 for top view

10 S4.1 Typical Reinf. @ 2x4 Top Plate Wood (all locs.)
1 1/2" = 1'-0"

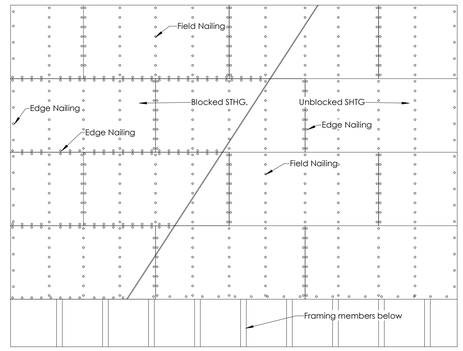

General Notes:
1. Min. size of plywood sheet shall be 2'-0" by 2'-0"
2. See plan for plywood thickness and nailing
3. Long Dimension of plywood shall run across (perpendicular to) joist or rafters.
4. Nail edge distance shall be min. 3/8" and shall not be driven through the outer plywood.
5. Continuous blocked panel edges shall receive edge nailing (blocked SHTG. only)
6. Stagger end joists 2'-0" min. as shown.
7. All joists and rafters shall be laid out in a 4'-0" module to coincide with plywood plans.
8. Nailing size and spacing as noted on plans.
9. Use tongue-in-groove plywood at floors.

8 S4.1 Roof/Floor Diaphragm Layout
3/4" = 1'-0"

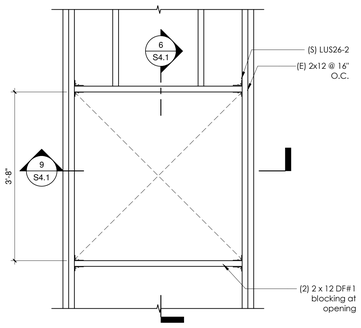

7 S4.1 Roof Access, Typ.
3/4" = 1'-0"

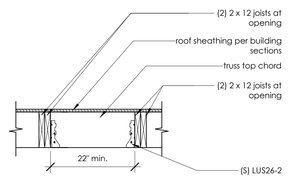

9 S4.1 Roof Access - Section 2
3/4" = 1'-0"

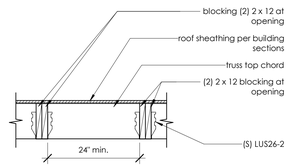

6 S4.1 Roof Access - Section 1
3/4" = 1'-0"

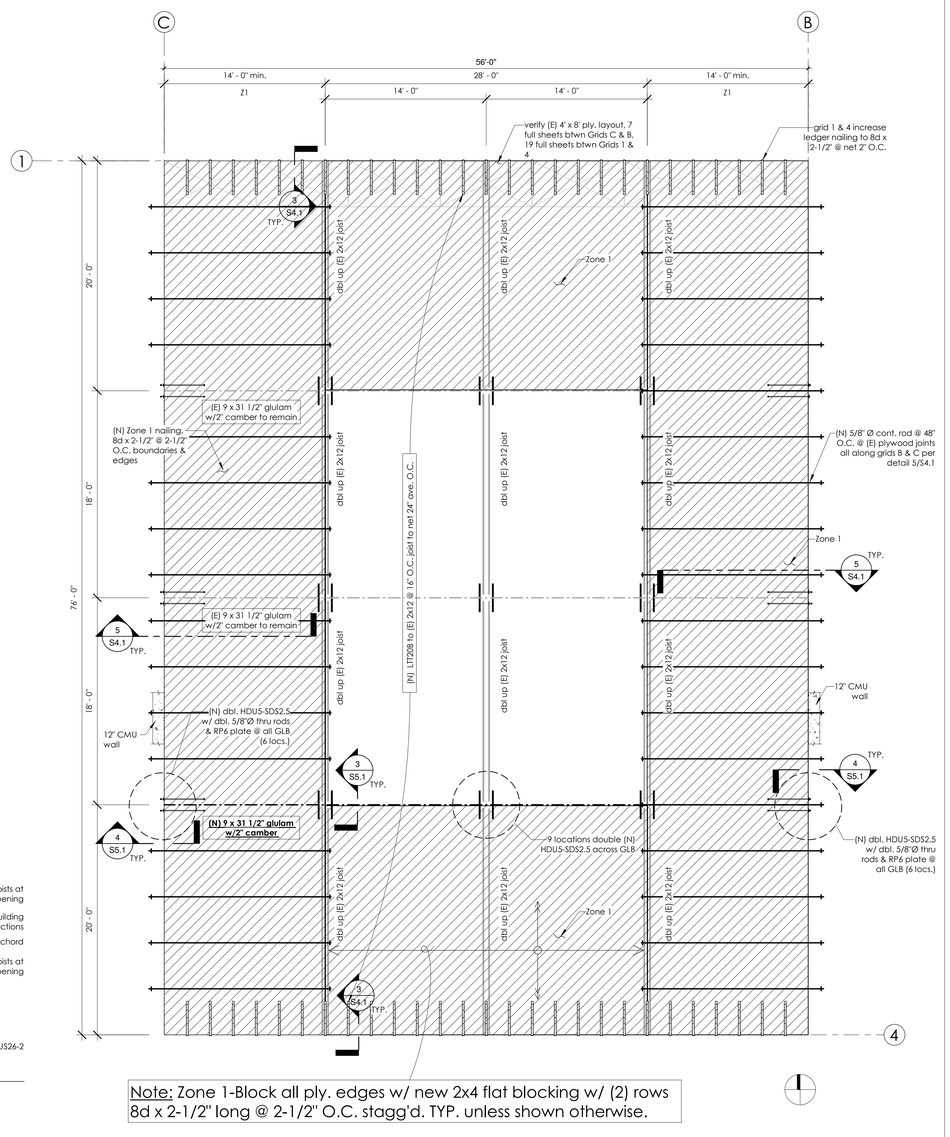

Note: Zone 1-Block all ply. edges w/ new 2x4 flat blocking w/ (2) rows 8d x 2-1/2" long @ 2-1/2" O.C. stagg'd. TYP. unless shown otherwise.

2 S4.1 Thru Wall Anchors @ Apparatus Room
3/16" = 1'-0"

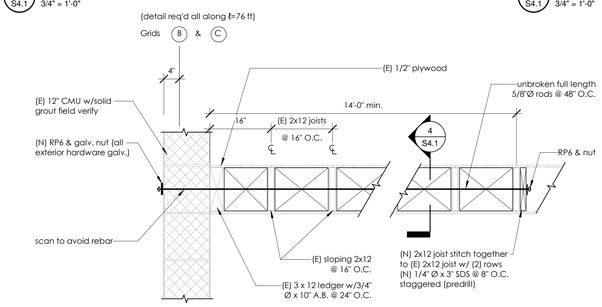

5 S4.1 Typ. Wall Anchor @ Apparatus Room
3/4" = 1'-0"

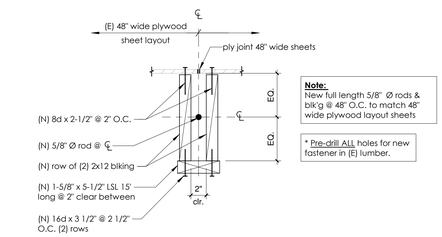

4 S4.1 Typ. Blocking Cross Section @ Apparatus Room
1 1/2" = 1'-0"

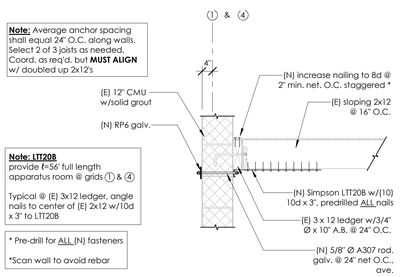

3 S4.1 Typ. Wall Anchor Section @ Apparatus Room
1/2" = 1'-0"

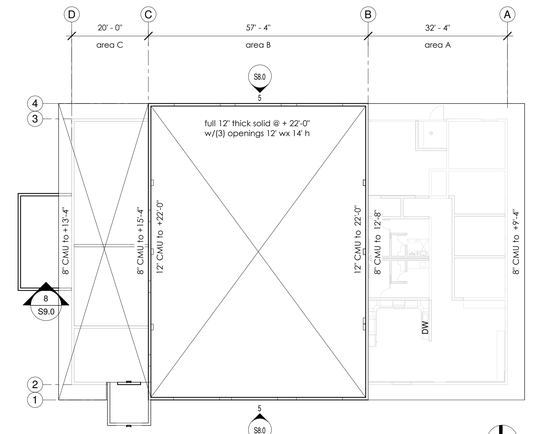

1 S4.1 Key Plan
1/16" = 1'-0"

Architect:
LDA Partners, LLP
Designers & Architects
222 Central Court
Stockton, CA 95204
209.943.0405
www.ldapartners.com

Client:
LATHROP-MANTECA FIRE PROTECTION DISTRICT
19001 SOMERSTON PARKWAY
LATHROP, CA 95330
209.941.5102

Project:
FIRE STATION 31 UPGRADES

800 E J STREET
LATHROP, CA 95330

Project No.: 20086
Drawn By: Author
Checked By: Checker

No.	Description	Date	By

3RD-SUBMITTAL - BLDG. DEPT. 12/9/2020

Structural Roof Reinf. Plan & Details

S4.1

12/9/2020 3:01:11 PM

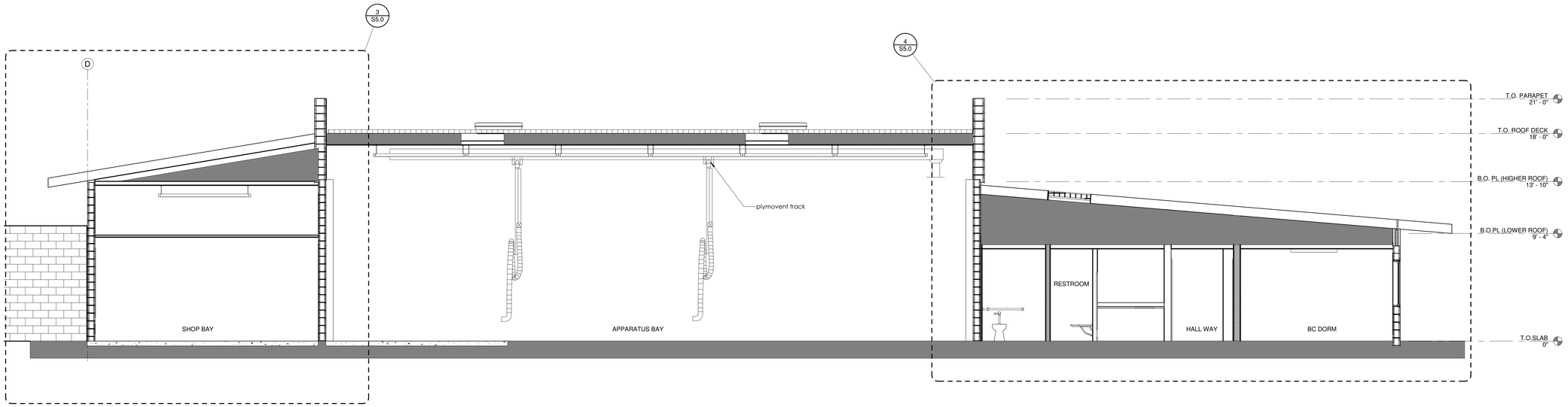

2 S5.0 Section 2
1/4" = 1'-0"

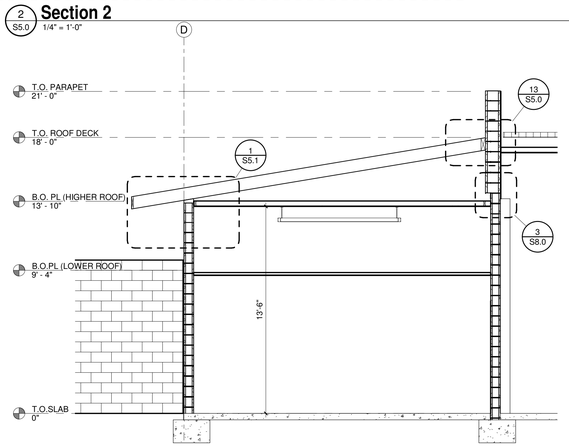

3 S5.0 Shop Section
1/4" = 1'-0"

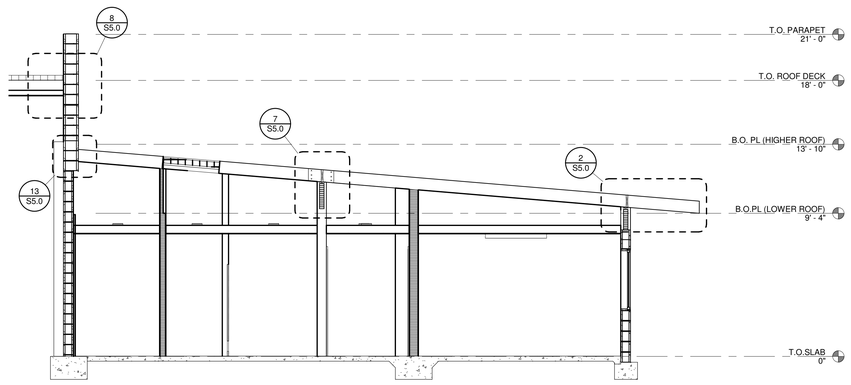

4 S5.0 Living Quarter Section
1/4" = 1'-0"

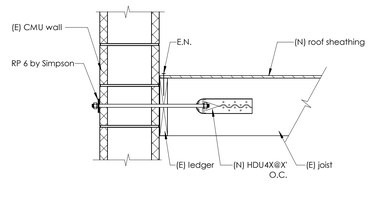

11 S5.0 (N) Diaphragm Holdown Parallel to Joist
1" = 1'-0"

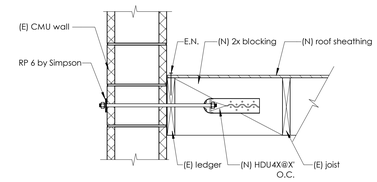

10 S5.0 (N) Diaphragm Holdown Perpendicular to Joist
1" = 1'-0"

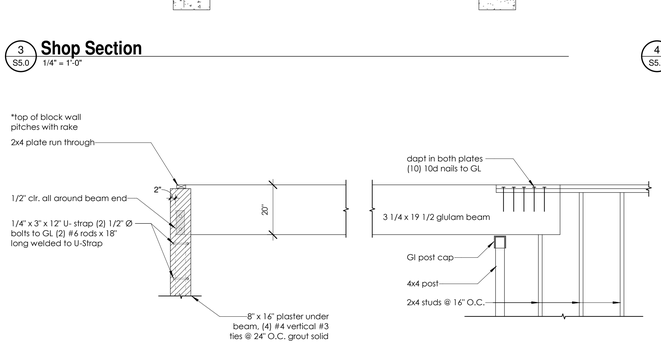

5 S5.0 Beam @ Multi - Use Room
1/2" = 1'-0"

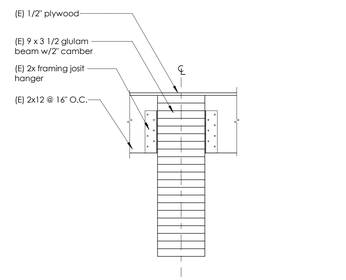

9 S5.0 (E) Beam Section
1" = 1'-0"

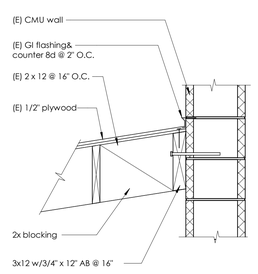

12 S5.0 (E) Diaphram Holdown Perpendicular to Joist
1" = 1'-0"

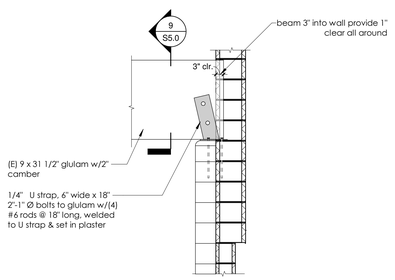

8 S5.0 (E) Beam Connection
1/2" = 1'-0"

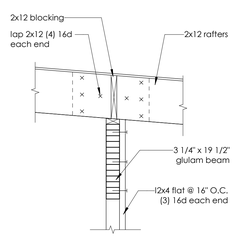

7 S5.0 (E) Beam @ Multi Rm - Cross Section
3/4" = 1'-0"

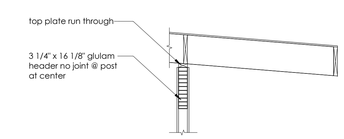

6 S5.0 (E) Typical Roof Overhang Detail
1/2" = 1'-0"

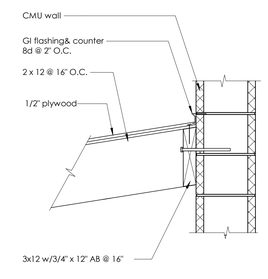

13 S5.0 (E) Diaphram Holdown Parallel to Joist
1" = 1'-0"

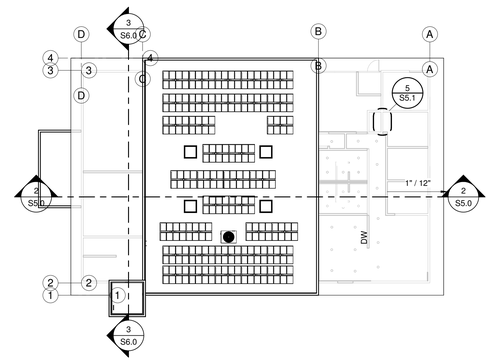

1 S5.0 Section C Key Plan
1" = 20'-0"

LDA DESIGNERS & ARCHITECTS

Architect:
LDA Partners, LLP
Designers & Architects
222 Central Court
Stockton, CA 95204
209.943.0405
www.ldapartners.com

Client:
LATHROP-MANTECA FIRE PROTECTION DISTRICT
19001 SOMERSTON PARKWAY
LATHROP, CA 95330
209.941.5102

Project:
FIRE STATION 31 UPGRADES

800 E J STREET
LATHROP, CA 95330

REGISTERED PROFESSIONAL ENGINEER
KEVIN N ELLIS
EXP. 12-31-21
STRUCTURAL
STATE OF CALIFORNIA

REGISTERED PROFESSIONAL ENGINEER
DOUGLAS E WALKER
C 76003
EXP. 12/31/20
CIVIL
STATE OF CALIFORNIA

Project No.: 20086
Drawn By: Author
Checked By: Checker

No.	Description	Date	By

3RD-SUBMITTAL - BLDG. DEPT.
12/9/2020

Building Section C

S5.0

12/9/2020 3:11:31 PM

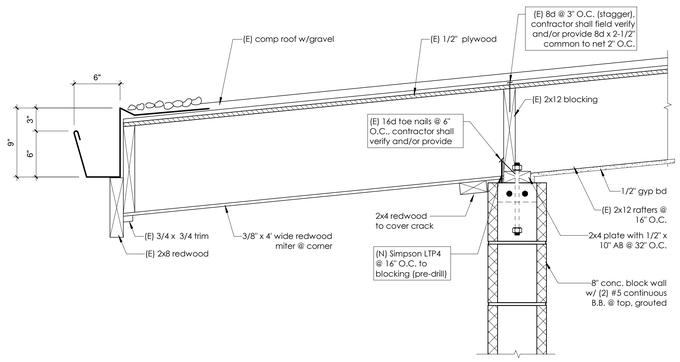

1 S5.1 **(E) Typical Low Eave Detail**
1 1/2" = 1'-0"

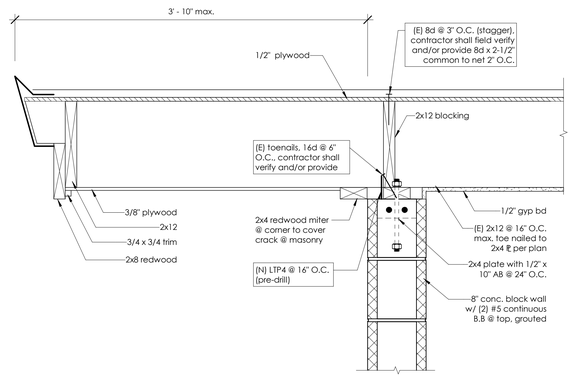

2 S5.1 **(E) Typ. Sloping Detail**
1 1/2" = 1'-0"

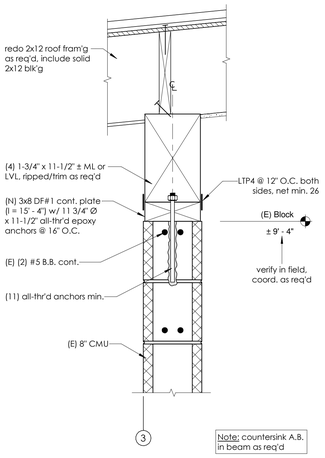

10 S5.1 **Drag/Collector Beam Section**
1 1/2" = 1'-0"

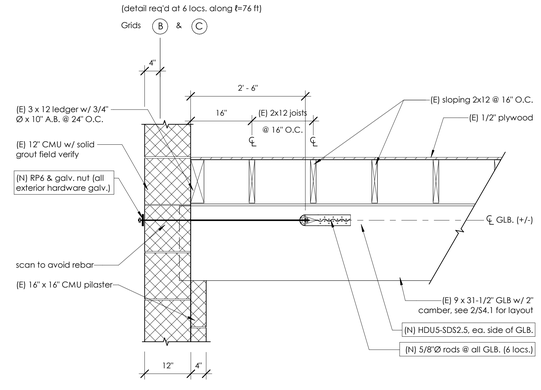

4 S5.1 **Typ. GLB Anchor @ Apparatus Room (6 Locs.)**
3/4" = 1'-0"

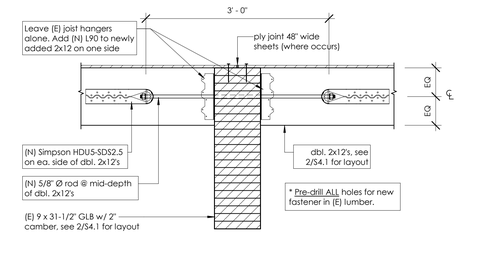

3 S5.1 **Typ. Thru Rod Detail @ Dbl. 2x12's (9 Locs.)**
1" = 1'-0"

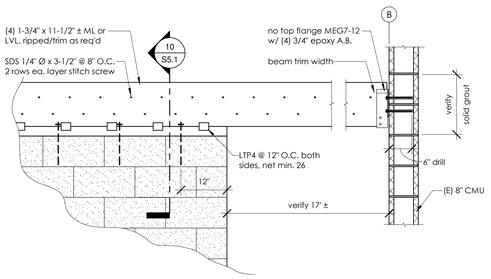

9 S5.1 **Drag/Collector Beam Detail**
3/4" = 1'-0"

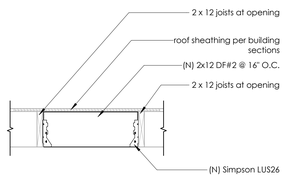

8 S5.1 **Roof Infill - Section 2**
3/4" = 1'-0"

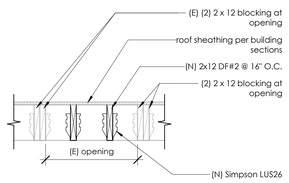

7 S5.1 **Roof Infill - Section 1**
3/4" = 1'-0"

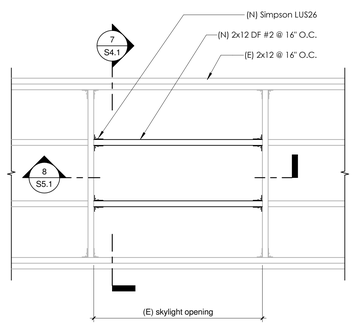

6 S5.1 **Roof Infill, Typ.**
3/4" = 1'-0"

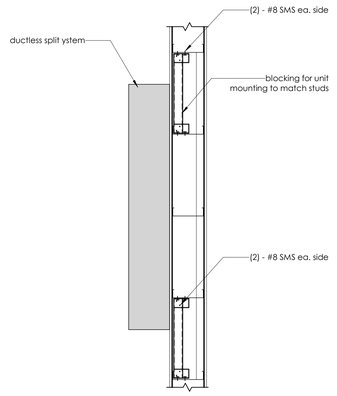

5 S5.1 **Ductless Split Mounting Detail - Plan View**
1" = 1'-0"

Architect:
LDA Partners, LLP
Designers & Architects
222 Central Court
Stockton, CA 95204
209.943.0405
www.ldapartners.com

Client:
LATHROP-MANTECA FIRE PROTECTION DISTRICT
19001 SOMERSTON PARKWAY
LATHROP, CA 95330
209.941.5102

Project:
FIRE STATION 31 UPGRADES

800 E J STREET
LATHROP, CA 95330

Project No.: 20086
Drawn By: Author
Checked By: Checker

No.	Description	Date	By

3RD-SUBMITTAL - BLDG. DEPT. 12/9/2020

Roof Framing Details

S5.1

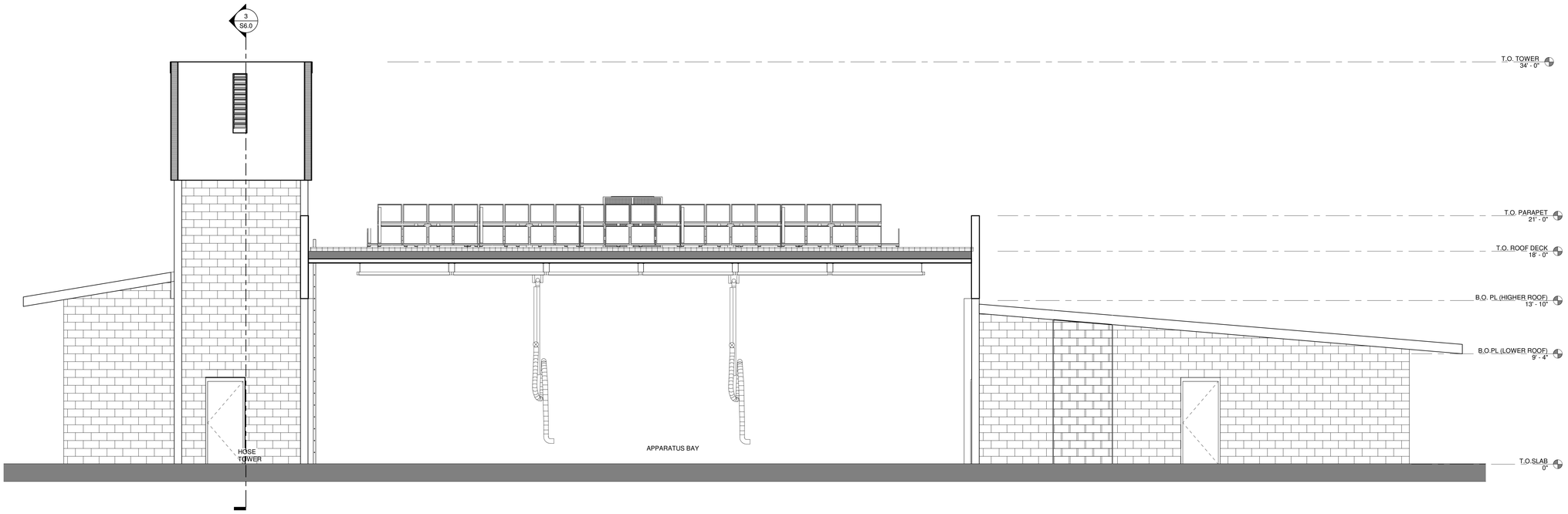

2 S6.0 **Section 3**
1/4" = 1'-0"

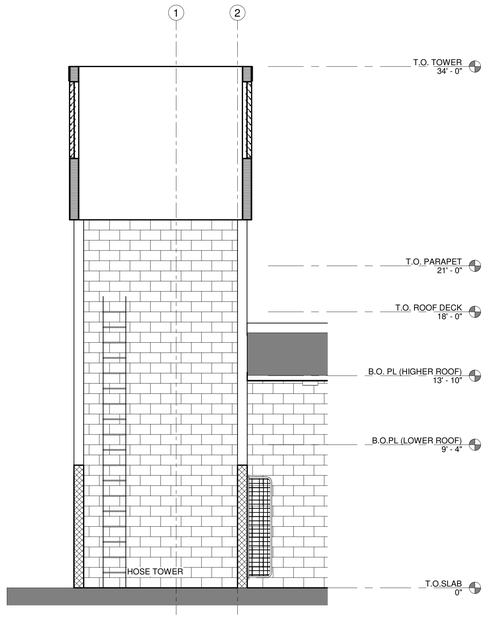

3 S6.0 **Hose Hang Tower**
1/4" = 1'-0"

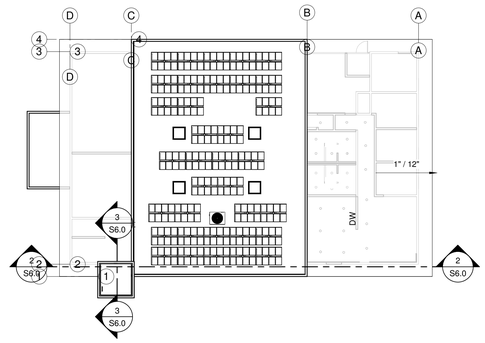

1 S6.0 **Section D Key Plan**
1" = 20'-0"

LDA
DESIGNERS & ARCHITECTS

Architect:
LDA Partners, LLP
Designers & Architects
222 Central Court
Stockton, CA 95204
209.943.0405
www.ldapartners.com

Client:
LATHROP-MANTECA FIRE PROTECTION DISTRICT
19001 SOMERSTON PARKWAY
LATHROP, CA 95330
209.941.5102

Project:
FIRE STATION 31 UPGRADES

800 E J STREET
LATHROP, CA 95330

Project No.: 20086
Drawn By: Author
Checked By: Checker

No.	Description	Date	By

3RD-SUBMITTAL - BLDG. DEPT.
12/9/2020

Building Section D

S6.0

12/9/2020 3:11:23 PM

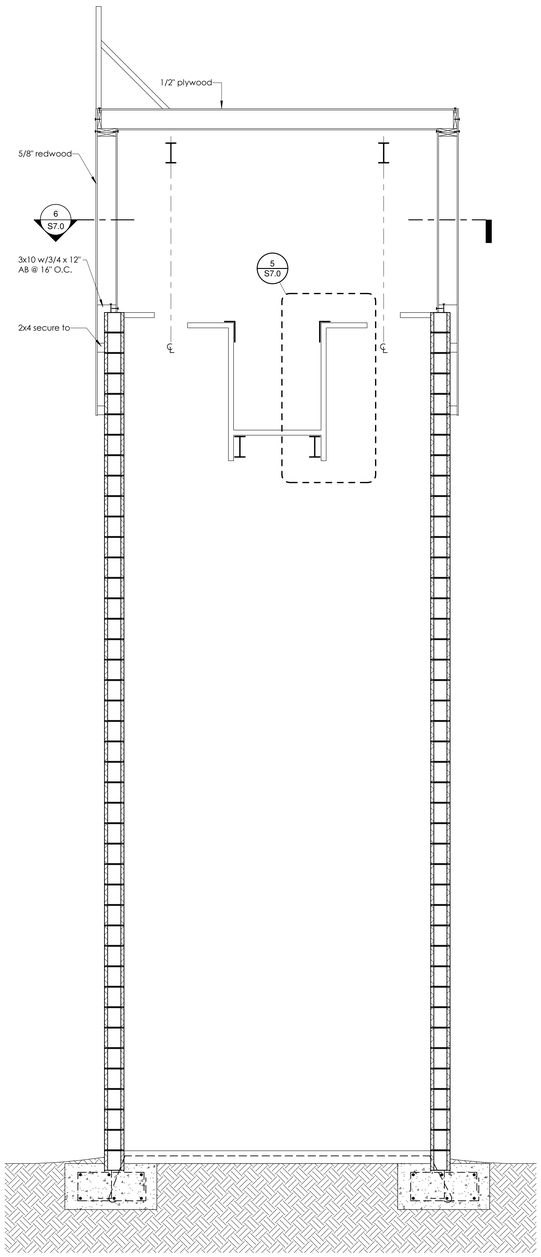

1 S7.0 Section A-S3
1/2" = 1'-0"

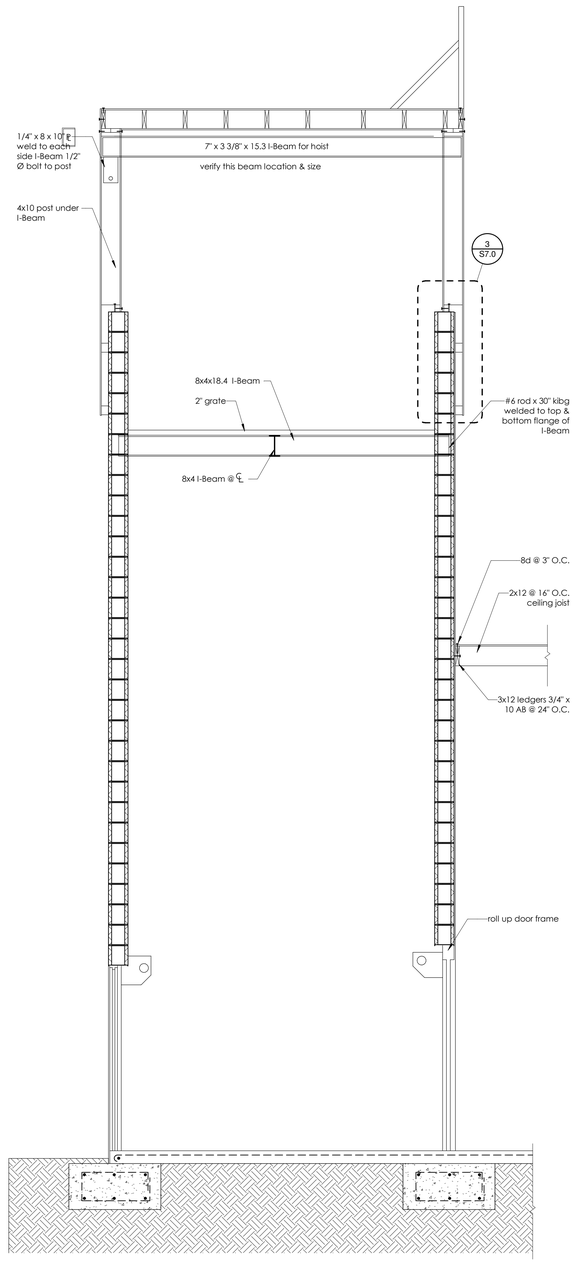

2 S7.0 Section B-S3
1/2" = 1'-0"

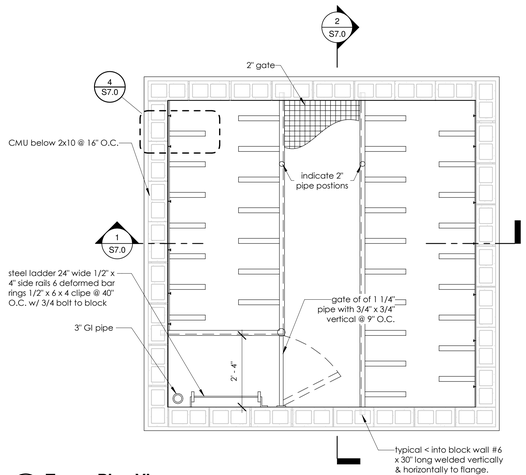

6 S7.0 Tower Plan View
1/2" = 1'-0"

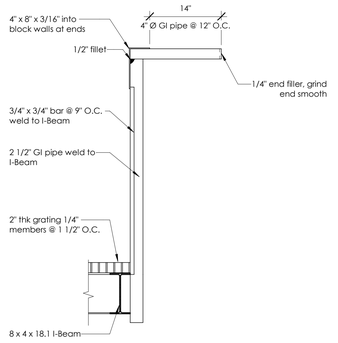

5 S7.0 Grate & I-Beam Connection
1" = 1'-0"

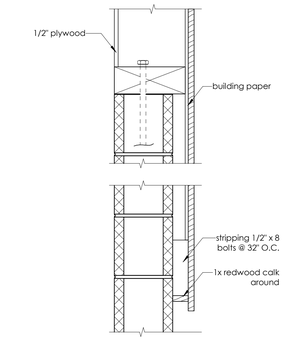

3 S7.0 Extended Tower Detail
1 1/2" = 1'-0"

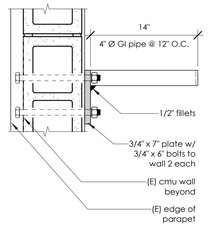

4 S7.0 Fire Hose Hanger Connection
1 1/2" = 1'-0"

LDA DESIGNERS & ARCHITECTS

Architect:
LDA Partners, LLP
Designers & Architects
222 Central Court
Stockton, CA 95204
209.943.0405
www.ldapartners.com

Client:
LATHROP-MANTECA FIRE PROTECTION DISTRICT
19001 SOMERSTON PARKWAY
LATHROP, CA 95330
209.941.5102

Project:
FIRE STATION 31 UPGRADES

800 E J STREET
LATHROP, CA 95330

REGISTERED PROFESSIONAL ENGINEER
DOUGLASS E. WALKER
C 76963
EXP 12/31/20
CIVIL
STATE OF CALIFORNIA

Project No.: 20086
Drawn By: Author
Checked By: Checker

No.	Description	Date	By

3RD-SUBMITTAL - BLDG. DEPT.
12/9/2020

Tower Plan

S7.0

PLOT: 12/9/2020 11:19:19 AM

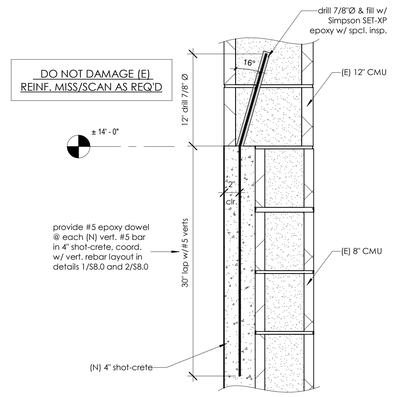

3 S8.0 Typ. Epoxy Dowel Detail to (E) CMU Wall
1 1/2" = 1'-0"

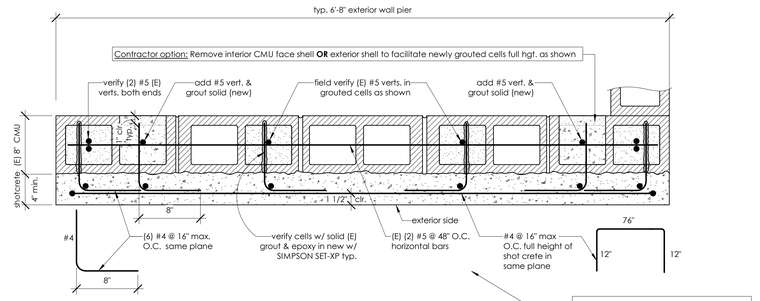

Notes:

1. Provide (6) new #5 verts as shown in 4" shot-crete. Roughen (E) CMU to bond
2. All new #5 verts. shall lap with epoxy dowels top & bottom per 3/S8.0 & 4/S8.0
3. For brick veneer finishing details, see architectural sheet AD0.1.

All shotcrete shall be f'c = 4,000 psi min. @ 28 days. Special inspection is req'd.

2 S8.0 Wall Pier Detail 2
1 1/2" = 1'-0"

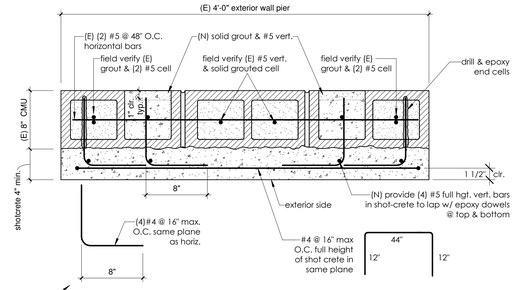

Notes:

1. (New) provide (4) #5 verts. in shot-crete. As shown.
2. Final result shall be a solid grouted sawcut interior CMU face shells & grout full height w/add #5 vert.
3. Scan to verify all (E) reinf. & grouted cells. Coord. as req'd.
4. Rough sand blast to roughen (E) ext. CMU block surfaces to bond w/new shot-crete.

1 S8.0 Wall Pier Detail 1
1 1/2" = 1'-0"

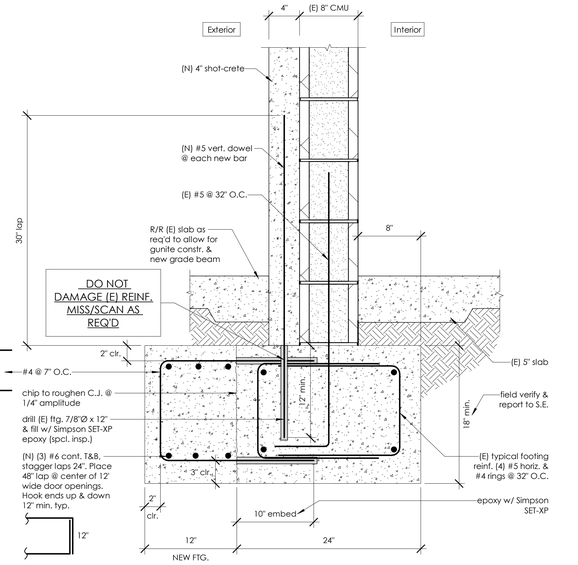

4 S8.0 Typ. Epoxy Dowels @ (E) Grade Beam Reinf. Detail
1 1/2" = 1'-0"

Notes:

1. Epoxy dowel all new #5 verts. drill 7/8" Ø x 12" deep into (E) concrete or masonry.
2. All Special Inspection: Angle drill inward @ 15° (+/-)

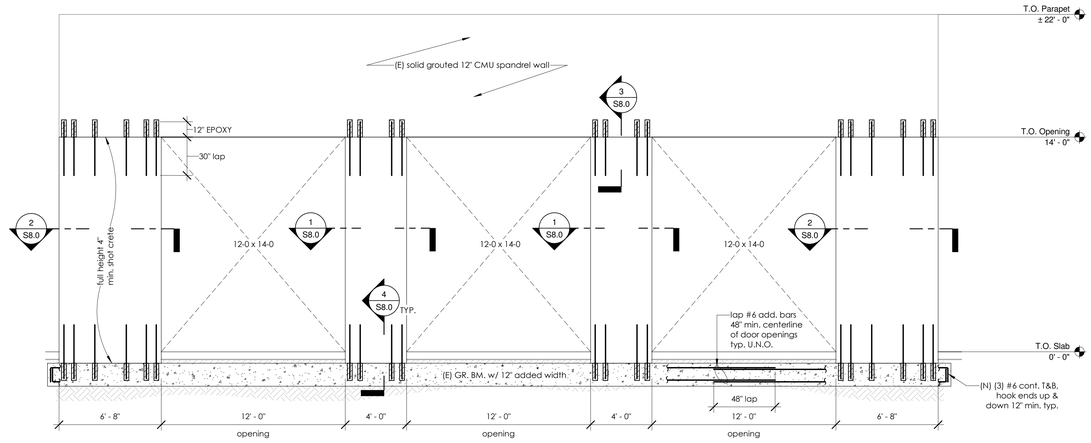

5 S8.0 Typ. Detail @ Apparatus Room Ext. Wall Elevation (Req'd 2 Locs.)
1/4" = 1'-0"

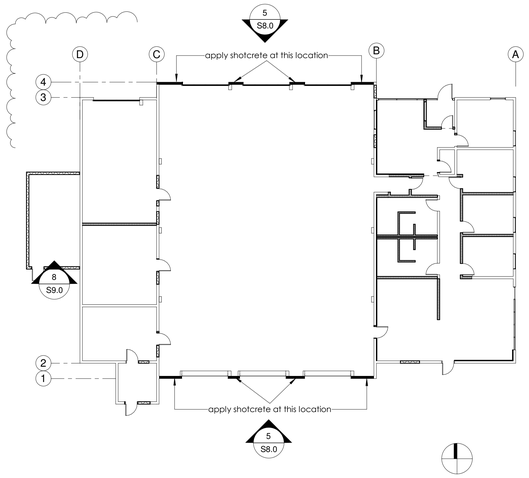

6 S8.0 Shotcrete Application Key Plan
1/16" = 1'-0"

LDA DESIGNERS & ARCHITECTS

Architect:
LDA Partners, LLP
Designers & Architects
222 Central Court
Stockton, CA 95204
209.943.0405
www.ldapartners.com

Client:
LATHROP-MANTECA FIRE PROTECTION DISTRICT
19001 SOMERSTON PARKWAY
LATHROP, CA 95330
209.941.5102

Project:
FIRE STATION 31 UPGRADES

800 E J STREET
LATHROP, CA 95330

REGISTERED PROFESSIONAL ENGINEER KEVIN E. ELLIS EXP 12-31-21 STRUCTURAL STATE OF CALIFORNIA

REGISTERED PROFESSIONAL ENGINEER DOUGLASS E. ANDERSEN C 76963 EXP 03/31/20 CIVIL STATE OF CALIFORNIA

Project No.: 20086
Drawn By: CM, TE
Checked By: KE

No.	Description	Date	By
2	Plan Check #2 Addenda #1	12/02/2020	TAE

3RD-SUBMITTAL - BLDG. DEPT. 12/9/2020

Exterior Shotcrete Reinf. Walls

S8.0

PM 8/6/2020 11:09:05 AM

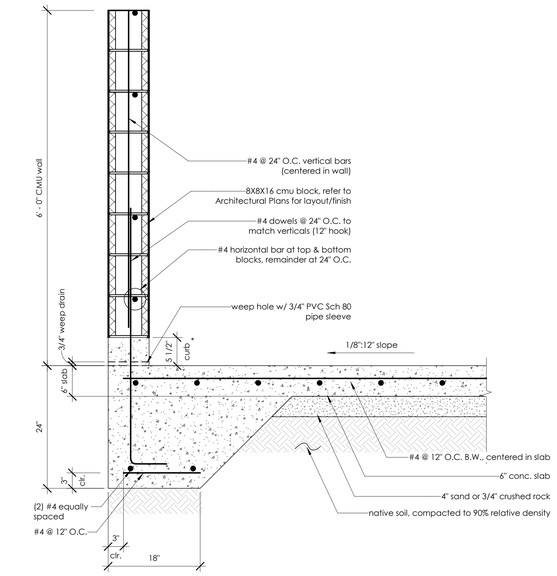

6 S9.0 Picnic Enclosure Wall Section
1" = 1'-0"

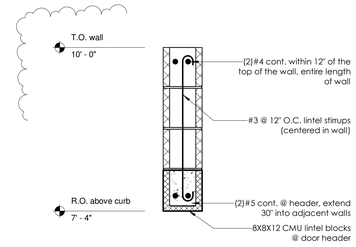

7 S9.0 CMU Header Detail
1" = 1'-0"

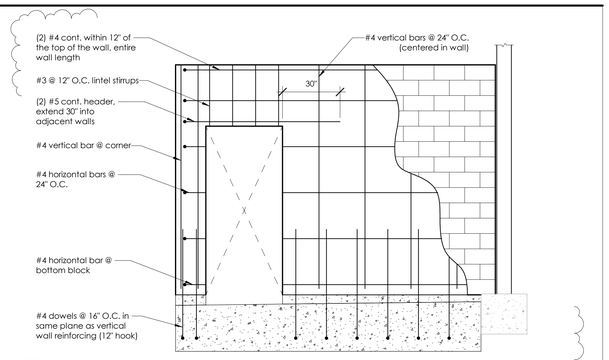

8 S9.0 CMU Reinforcing Elevation
3/8" = 1'-0"

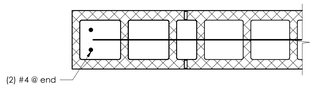

5 S9.0 Wall End Reinforcing
1 1/2" = 1'-0"

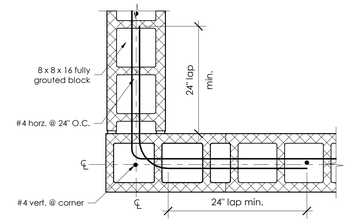

4 S9.0 Horizontal Corner Reinforcement Detail
1 1/2" = 1'-0"

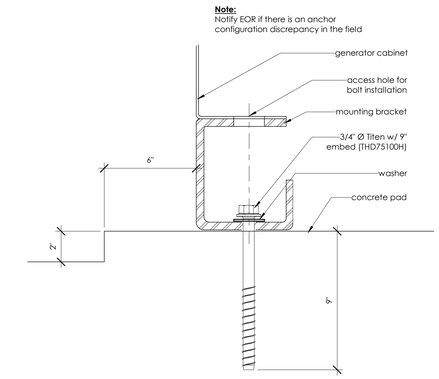

3 S9.0 Anchor Detail
3" = 1'-0"

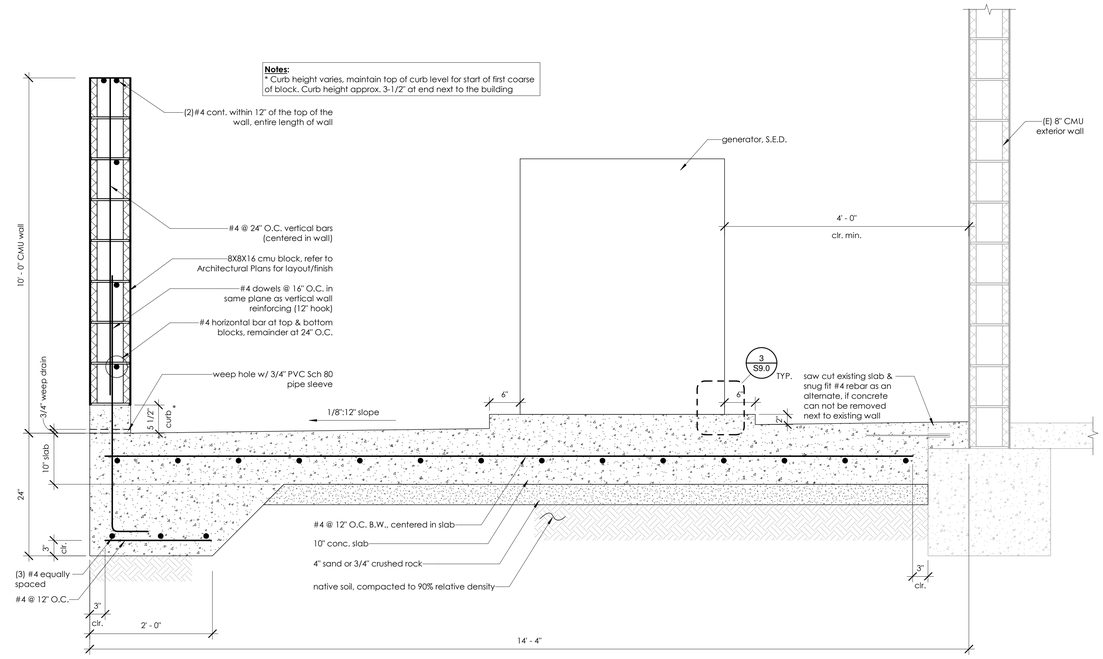

2 S9.0 Generator Enclosure Section
1" = 1'-0"

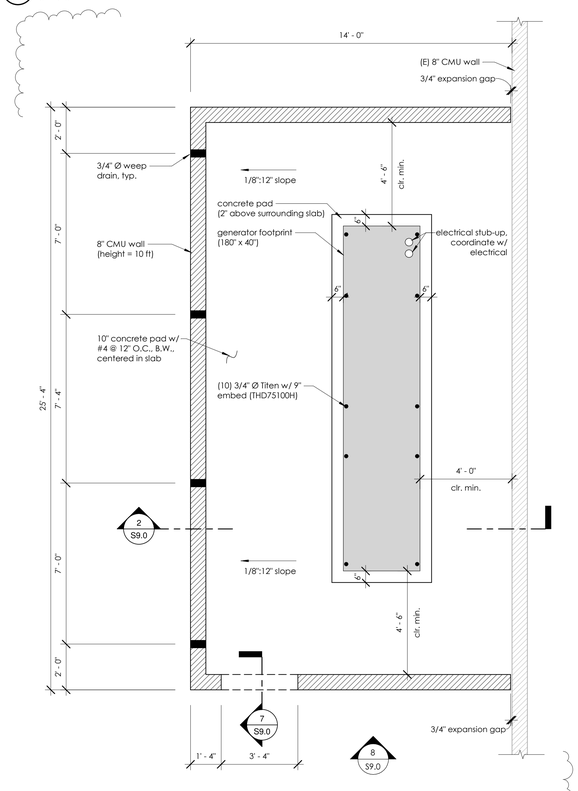

1 S9.0 Generator Enclosure Plan
3/8" = 1'-0"

Architect:
LDA Partners, LLP
Designers & Architects
222 Central Court
Stockton, CA 95204
209.943.0405
www.ldapartners.com

Client:
LATHROP-MANTECA FIRE PROTECTION DISTRICT
19001 SOMERSTON PARKWAY
LATHROP, CA 95330
209.941.5102

Project:
FIRE STATION 31 UPGRADES

800 E J STREET
LATHROP, CA 95330

REGISTERED PROFESSIONAL ENGINEER
DOUGLASS E. WALKER
C 70693
EXP 12/31/20
CIVIL
STATE OF CALIFORNIA

Project No.: 20086
Drawn By: Author
Checked By: Checker

No.	Description	Date	By
1	review cycle-1	11/16/2020	TAE
2	Plan Check #2 Addenda #1	12/02/2020	TAE

3RD-SUBMITTAL - BLDG. DEPT. 12/9/2020

CMU Wall Details

S9.0

2020013.00 PM

OUTDOOR VRF HEAT PUMP SCHEDULE

MARK NO.	MANUFACTURER & MODEL NUMBER	DESCRIPTION	HEATING CAPACITY	COOLING CAPACITY	SEER/EER RATING	COP/HSPF RATING	ELECTRICAL MCA	ELECTRICAL MOCP	ELECTRICAL VOLT	ELECTRICAL PH	OP. WT. (LBS)	REMARKS
CU-1	MITSUBISHI #TURYP1203AN40	OUTDOOR HEAT PUMP	135.0MBH	120.0MBH	12.1 EER	3.61 COP	43.0	70.0	208	3	622	NOTES 1, 2, 3, 4
CU-2	MITSUBISHI #PUZ-A24NHA7	OUTDOOR HEAT PUMP	24.0MBH	26.0MBH	21.4 SEER	11.0 HSPF	19.0	25.0	208	1	153	NOTES 1, 2, 3, 4

NOTES:
1. NOMINAL COOLING CAPACITIES ARE BASED ON INDOOR COIL EAT OF 80/67 DEG F (DB/WB). NOMINAL HEATING CAPACITIES ARE BASED ON INDOOR COIL EAT OF 45 DEG F (DB).
2. EFFICIENCY VALVES FOR EER, IEER, COP ARE BASED ON AHRI 1230 TEST METHOD FOR MIXTURE OF DUCTED & NON-DUCTED INDOOR UNITS.
3. FOR SYSTEMS WITH MULTIPLE MODULES, REFRIGERANT PIPE DIMENSIONS INDICATE TOTAL SYSTEM COMBINED PIPING DOWNSTREAM OF MODULE TWINNING.
4. ADDED FIELD CHARGE LISTED IS IN ADDITION TO FACTORY CHARGE, THIS MUST BE UPDATED BASED UPON FINAL AS-BUILT PIPING LAYOUT.

FAN COIL SCHEDULE

MARK NO.	MANUFACTURER & MODEL NUMBER	DESCRIPTION	CFM	S.P.	OSA CFM	HEATING CAPACITY	COOLING CAPACITY	ELECTRICAL MCA	ELECTRICAL MOCP	ELECTRICAL VOLT	ELECTRICAL PH	OP. WT. (LBS)	REMARKS
FC-1	MITSUBISHI #TPEFYP018MA143A	CEILING CONCEALED	600	0.6"	55	20.0MBH	18.0MBH	1.56	15.0	208	1	58	NOTES 1, 2, 3, 4, 5, 6, 7
FC-2	MITSUBISHI #TPEFYP008MA143A	CEILING CONCEALED	300	0.6"	30	9.0MBH	8.0MBH	1.05	15.0	208	1	49	NOTES 1, 2, 3, 4, 5, 6, 7
FC-3	MITSUBISHI #TPEFYP018MA143A	CEILING CONCEALED	600	0.6"	65	20.0MBH	18.0MBH	1.56	15.0	208	1	58	NOTES 1, 2, 3, 4, 5, 6, 7
FC-4	MITSUBISHI #TPEFYP054MA143A	CEILING CONCEALED	1485	0.6"	620	60.0MBH	54.0MBH	3.31	15.0	208	1	86	NOTES 1, 2, 3, 4, 5, 6, 7
FC-5	MITSUBISHI #TPEFYP006MA143A	CEILING CONCEALED	300	0.6"	65	6.7MBH	6.0MBH	1.05	15.0	208	1	49	NOTES 1, 2, 3, 4, 5, 6, 7
FC-6	MITSUBISHI #TPEFYP006MA143A	CEILING CONCEALED	300	0.6"	65	6.7MBH	6.0MBH	1.05	15.0	208	1	49	NOTES 1, 2, 3, 4, 5, 6, 7
FC-7	MITSUBISHI #TPEFYP006MA143A	CEILING CONCEALED	300	0.6"	65	6.7MBH	6.0MBH	1.05	15.0	208	1	49	NOTES 1, 2, 3, 4, 5, 6, 7
FC-8	MITSUBISHI #PKA-A24KA7.TH	WALL MOUNTED	775	-	-	26.0MBH	24.0MBH	POWERED BY OUTDOOR UNIT				46	NOTES 1, 2, 3, 4, 5, 6, 8

NOTES:
1. NOMINAL COOLING CAPACITIES ARE BASED ON INDOOR COIL EAT OF 80/67 DEG F (DB/WB). NOMINAL HEATING CAPACITIES ARE BASED ON INDOOR COIL EAT OF 45 DEG F (DB).
2. SEE OUTDOOR UNIT SCHEDULE FOR OUTDOOR AMBIENT CONDITIONS, CONNECTED CAPACITY, AND OTHER FACTORS ASSOCIATED WITH CORRECTED CAPACITIES.
3. SEE SCHEMATIC PIPING/CONTROL DIAGRAM FOR INDICATION OF REQUIRED INDOOR UNIT REMOTE CONTROLLERS, SYSTEM CONTROLLERS, AND INTEGRATION DEVICES.
4. N/A
5. N/A
6. SYSTEM SHALL AUTO-RESTART ON POWER FAILURE AND SHALL REMAIN OPERATIONAL IF ANY INDIVIDUAL INDOOR UNIT LOSES POWER.
7. PROVIDE WITH MITSUBISHI FB FILTER BOX & MERV-13 FILTERS.
8. PROVIDE CONDENSATE PUMP & CONDENSATE OVERFLOW SWITCH #X87-721.

BRANCH CONTROLLER SCHEDULE

MARK NO.	MANUFACTURER & MODEL NUMBER	DESCRIPTION	BRANCH QTY.	ELECTRICAL MCA	ELECTRICAL MOCP	ELECTRICAL VOLT	ELECTRICAL PH	OP. WT. (LBS)	REMARKS
BC-1	MITSUBISHI #TCMBM0108JA1IN4	REFRIGERANT BRANCH BOX	8	0.83	15.0	208	1	106	NOTE #1, 2, 3, 4

NOTES:
1. DISCONNECT BY ELECTRICAL, SEE M-4.02 FOR SYSTEM LAYOUT.
2. CENTRALIZED CONTROLLER TE-200A.
3. BRANCH CONTROLLER TO INCLUDE BALL VALVES, REMOVABLE BOTTOM ACCESS SERVICING PANEL, AND 2 PIPE DISTRIBUTION PIPING.
4. SYSTEM SHALL AUTO-RESTART ON POWER FAILURE AND SHALL REMAIN OPERATIONAL IF ANY INDIVIDUAL INDOOR UNIT LOSES POWER.

UNIT HEATER SCHEDULE

MK. NO.	MANUFACTURER & MODEL #	DESCRIPTION	HTG. MBH IN	HTG. MBH OUT	ELECTRICAL TYPE	ELECTRICAL FLA	ELECTRICAL VOLT	ELECTRICAL PH	ELECTRICAL MOCP	AFUE %	OP. WT. LBS. (EA.)	REMARKS
UH-1	REZNOR #UDAS-100	UNIT HEATER	105.0	87.1	H.P.	3.9	115	1	15	83.0	97	SEE NOTE 1
UH-2	REZNOR #UDAS-100	UNIT HEATER	105.0	87.1	H.P.	3.9	115	1	15	83.0	97	SEE NOTE 1
UH-3	REZNOR #UDAS-100	UNIT HEATER	105.0	87.1	H.P.	3.9	115	1	15	83.0	97	SEE NOTE 1
UH-4	REZNOR #UDAS-100	UNIT HEATER	105.0	87.1	H.P.	3.9	115	1	15	83.0	97	SEE NOTE 1

NOTES:
1. PROVIDED WITH ALUMINIZED STEEL HEAT EXCHANGER, SINGLE BURNER COMBUSTION SYSTEM, INTEGRATED CIRCUIT BOARD, MULTI-TRY DIRECT IGNITION, FAN RELAY, SINGLE-STAGE GAS VALVE, BUILT-IN DISCONNECT SWITCH, 20A., FULL FAN GUARD, THERMOSTAT MOUNTED TOP AT +48"AFF., CONCENTRIC VENT SYSTEM.

FAN SCHEDULE

MK NO	MANUFACTURER & MODEL #	DESCRIPTION	CFM	FAN RPM	SONES	S.P.	MOTOR POWER	ELECTRICAL VOLT	ELECTRICAL PH	OP. WEIGHT	REMARKS
CEF-1	GREENHECK #SP-A700-VG	CEILING EXHAUST FAN	625	1405	6.0	0.35"	144 WATT	115	1	39 LBS	SEE NOTE 1
CEF-2	GREENHECK #SP-A700-VG	CEILING EXHAUST FAN	385	1210	3.5	0.35"	64 WATT	115	1	39 LBS	SEE NOTE 2
CEF-3	GREENHECK #SP-A700-VG	CEILING EXHAUST FAN	385	1210	3.5	0.35"	64 WATT	115	1	39 LBS	SEE NOTE 2

NOTES:
1. PROVIDE WITH CURB & CURB CAP (GREENHECK GRS-10), BACKDRAFT DAMPER, AND WALL SWITCH.
2. PROVIDE WITH CURB & CURB CAP (GREENHECK GRS-10), BACKDRAFT DAMPER, INTERLOCK WITH FC-4

AIR DISTRIBUTION DEVICE SCHEDULE

MK. NO.	MANUFACTURER & MODEL #	FRAME TYPE	BLOW PATTERN	OBD	REMARKS
CS-1	NAILOR #7500-S	SURFACE	SEE PLAN	YES	WHITE FINISH, MODULAR CORE
CS-2	NAILOR #7500-L	LAY-IN	SEE PLAN	NO	WHITE FINISH, MODULAR CORE
CR-1	NAILOR #4260-S	SURFACE	---	YES	WHITE FINISH
CR-2	NAILOR #4260-L	LAY-IN	---	NO	WHITE FINISH

GRAVITY VENTILATOR SCHEDULE

MK NO	MANUFACTURER & MODEL #	DESCRIPTION	CFM	S.P.	OP. WT. (LBS)	REMARKS
GV-1	GREENHECK #GRSI-8	ROUND GRAVITY INTAKE HOOD	65	0.05"	7	SEE NOTE 1
GV-2	GREENHECK #GRSI-18	ROUND GRAVITY INTAKE HOOD	900	0.05"	19	SEE NOTE 1

NOTES:
1. PROVIDE WITH INTEGRAL BIRD SCREEN. PROVIDE WITH ROOF CURB.

VEHICLE EXHAUST REMOVAL SYSTEM SCHEDULE

MK NO	MANUFACTURER & MODEL #	DESCRIPTION	SUPPORTS	WEIGHT (LBS)	REMARKS
SBTA 21	PLYMOVENT SBTA-21	SBTA TRACK SYSTEM, BACK-IN, 19' LONG, 6" UNDER DOOR HEIGHT	2	150	SEE NOTE 1
VSRX 70-2	PLYMOVENT VSRX 70-2	VSRA RAIL SYSTEM, DRIVE THRU, 66.5' LONG MAX, 6" UNDER DOOR HEIGHT	7	629	SEE NOTE 1
CP-1	PLYMOVENT OS-3	CONTROL PANEL, 48" AFF	N/A	N/A	SEE NOTE 1
FAN-1	PLYMOVENT TEV-585	7.5HP/208-230V/1PH FAN	1	185	SEE NOTE 1,2

NOTES:
1. SEE SHEET M5.00 FOR ADDITIONAL PLYMOVENT INFORMATION.

RESIDENTIAL HOOD SCHEDULE

MK NO	MANUFACTURER & MODEL #	DESCRIPTION	CFM	REMARKS	OP. WEIGHT
H-1	WOLF #PW482718	RANGE HOOD	500	15 AMP DEDICATED CIRCUIT, 10"ϕ DUCT, (3) HALOGEN LIGHTS. WITH WALL SWITCH	96 LBS

MECHANICAL GENERAL NOTES

1. SCOPE:
DEMOLISH AND REMODEL HVAC SYSTEM, INCLUDING MECHANICAL EQUIPMENT & DUCTWORK AS GENERALLY DELINEATED ON THE DRAWINGS. EQUIPMENT SHALL COMPLY WITH TITLE 24 CALIFORNIA CODE OF REGULATIONS.
2. CODES:
ALL WORK MATERIAL AND EQUIPMENT SHALL BE FURNISHED AND INSTALLED IN COMPLIANCE WITH THE FOLLOWING CODES AS ADOPTED AND AMENDED BY THE INSPECTING AUTHORITY HAVING JURISDICTION. NOTHING IN THESE PLANS SHALL BE CONSTRUED TO PERMIT THE INSTALLATION OF WORK, MATERIAL OR EQUIPMENT NOT CONFORMING TO THESE OR OTHER CODES APPLICABLE TO THIS PROJECT:
   - A. 2019 CALIFORNIA ADMINISTRATIVE CODE (CAC) PART 1, TITLE 24, CALIFORNIA CODE OF REGULATIONS (CCR)
   - B. 2019 CALIFORNIA BUILDING CODE (CBC) PART 2, TITLE 24, CCR BASED ON THE 2018 INTERNATIONAL BUILDING CODE (IBC)
   - C. 2019 CALIFORNIA ELECTRICAL CODE (CEC) PART 3, TITLE 24, CCR BASED ON THE 2017 NATIONAL ELECTRICAL CODE (NEC)
   - D. 2019 CALIFORNIA MECHANICAL CODE (CMC) PART 4, TITLE 24, CCR BASED ON THE 2018 UNIFORM MECHANICAL CODE (UMC)
   - E. 2019 CALIFORNIA PLUMBING CODE (CPC) PART 5, TITLE 24, CCR BASED ON THE 2018 UNIFORM PLUMBING CODE (UPC)
   - F. 2019 CALIFORNIA ENERGY CODE (CEC) PART 6, TITLE 24 CCR.
   - G. 2019 CALIFORNIA FIRE CODE (CFC) PART 9, TITLE 24, CCR BASED ON THE 2018 INTERNATIONAL FIRE CODE (IFC)
   - H. 2019 CALIFORNIA GREEN BUILDING STANDARDS (CGBSC) PART 11, TITLE 24, CCR
3. WORKMANSHIP:
ALL WORKMANSHIP SHALL BE DONE IN A NEAT AND ORDERLY MANNER ACCORDING TO THE BEST TRADE PRACTICE BY THOSE SKILLED IN THE PARTICULAR TRADE. EQUIPMENT, DUCTS, GRILLES, ETC., SHALL BE PLUMB, LEVEL, SQUARE OR CENTERED ETC., TO GIVE A NEAT AND PLEASING APPEARANCE. ALL EQUIPMENT SHALL BE INSTALLED IN STRICT COMPLIANCE WITH MANUFACTURER'S RECOMMENDATIONS.
4. AVAILABLE POWER:
THE MECHANICAL CONTRACTOR SHALL CONFIRM ALL SYSTEMS VOLTAGES BEFORE BIDDING OR ORDERING EQUIPMENT, AND SHALL ALLOW FOR BUCK & BOOST TRANSFORMERS IF REQUIRED.
5. AIR BALANCE:
THE AIR DISTRIBUTION SYSTEM SHALL BE BALANCED TO DELIVER SPECIFIED AIR QUANTITIES FOLLOWING THE PROCEDURES OF THE LATEST EDITION OF THE SMACNA PUBLICATION PROCEDURAL STANDARDS FOR TESTING ADJUSTING & BALANCING OF ENVIRONMENTAL SYSTEMS. CONTRACTOR SHALL PROVIDE ACCESSIBLE & ADJUSTABLE VOLUME DAMPERS AS REQUIRED TO BALANCE THE SYSTEMS AND MAINTAIN A NOISE CRITERIA LEVEL NOT TO EXCEED 30.
THE AIR BALANCE TECHNICIAN SHALL BE RESPONSIBLE TO MODIFY ALL SUPPLY, RETURN, AND EXHAUST FAN SHEAVES & VFD OUTPUT FREQUENCY LIMITS AS APPLICABLE SUCH THAT THE DESIGN AIR FLOWS ARE MET. ALL SUPPLY FANS CONTROLLED FOR FILTER LOADING SHALL SIMILARLY BE MODIFIED TO ENSURE THE FULL RANGE OF MOTOR POWER IS AVAILABLE TO THE CONTROL SYSTEM. RATED MAXIMUM FAN SPEED SHALL NOT BE EXCEEDED.
6. PERMITS AND UTILITY SERVICE FEES:
CONTRACTOR TO ARRANGE AND PAY FOR ALL PERMITS, INSPECTIONS AND SERVICE CHARGES REQUIRED IN THE INSTALLATION OF THE WORK.
7. EXISTING INFORMATION:
LOCATION, SIZE, MATERIAL, ETC. OF EXISTING SYSTEMS, IS PROVIDED FROM SOURCES DEEMED TO BE RELIABLE BUT IS NOT GUARANTEED. CONTRACTOR SHALL FIELD VERIFY ALL DATA BEFORE PROCEEDING WITH ANY WORK. NO EXTRA COST WILL BE ALLOWED FOR CONDITIONS NOT AS SHOWN.
8. ACCURACY:
PLANS ARE DIAGRAMMATIC. CONTRACTOR SHALL CONFIRM ALL DIMENSIONS AND LOCATIONS OF AC UNITS, EXHAUST FANS, WALLS, PARTITIONS ETC., AGAINST ARCHITECTURAL AND STRUCTURAL DESIGN PLANS FOR LOCATION CONSISTENCY & ACCURACY PRIOR TO COMMENCING WITH ANY WORK.
9. PAINTING:
PAINT ALL VISIBLE INTERIOR PORTIONS OF TERMINAL DEVICES & CANS WITH FLAT BLACK ENAMEL PAINT.
10. SIZES:
DUCTWORK SIZES ON PLANS ARE INSIDE NET FREE AREA.
11. MECHANICAL EQUIPMENT:
ALL EQUIPMENT SHALL BE LISTED BY AN APPROVED TESTING AGENCY AND INSTALLED IN ACCORDANCE WITH ITS INSTALLATION INSTRUCTIONS AND LISTING.

DUCTWORK NOTES

1. ALL WORK TO BE DONE IN ACCORDANCE WITH THE LATEST EDITIONS OF THE APPLICABLE SMACNA STANDARDS AND FABRICATION GUIDELINES.
2. PRIOR TO CONSTRUCTION, CONTRACTOR SHALL SUBMIT DETAILED SHOP DRAWINGS SHOWING ACTUAL EQUIPMENT SELECTION, CONFIGURATION AND LOCATION; DUCTWORK SIZE, ROUTING AND PENETRATION LOCATIONS.
3. ALL SUPPLY AND RETURN DUCTS SHALL BE INSULATED PER T24 THICKNESS AND R-VALUE REQUIREMENTS. EXTERIOR INSULATION EXPOSED TO WEATHER SHALL BE WEATHERPROOFED AND SHALL BE PAINTED TO MATCH ADJACENT SURFACE.
4. ALL METAL DUCTS SHALL BE CONSTRUCTED OF GALVANIZED SHEET METAL PER CALIFORNIA MECHANICAL CODE STANDARDS.
5. ALL RECTANGULAR BRANCHES SHALL BE CONSTRUCTED OF WYE FITTINGS.
6. PROVIDE TURNING VANES ON ALL SQUARE AND RECTANGULAR ELBOWS.

DEMOLITION NOTES

1. THE CONTRACTOR SHALL VISIT THE PROJECT SITE AND MAKE HIMSELF AWARE OF ALL EXISTING CONDITIONS WHICH CAN BE OBSERVED. ADDITIONAL COSTS WILL NOT BE ALLOWED FOR CORRECTION OF ITEMS WHICH CAN BE OBSERVED AND THEREFORE SHOULD BE INCLUDED IN HIS BID. THE CONTRACTOR IS RESPONSIBLE FOR ALL DEMOLITION WORK REQUIRED TO COMPLETE THIS PROPOSED PROJECT.
2. THE NOTES AND DRAWINGS CONTAINED ON THIS SHEET DESCRIBE IN A GENERAL SENSE THE EXTENT OF ITEMS TO BE MODIFIED, REMOVED OR INSTALLED. THIS DESCRIPTION DOES NOT NECESSARILY INCLUDE A DESCRIPTION OF ITEMS TO BE REPAIRED OR REFINISHED AS A RESULT OF THIS REMOVAL OR MODIFICATION. IN THE ABSENCE OF ANY SPECIFIC DIRECTION, THE CONTRACTOR SHALL REPAIR THE AFFECTED AREA(S) TO A CONDITION EQUAL TO THE ADJACENT AREA(S) AND/OR SIMILAR EXISTING CONDITIONS ON PROJECT.
3. THE CONTRACTOR SHALL PROVIDE DUST AND DEBRIS CONTROL THROUGHOUT THE PROJECT'S CONSTRUCTION. THE CONTRACTOR SHALL COORDINATE HIS WORK WITH THE BUILDING OWNER TO PROVIDE THE LEAST INTERRUPTION OF EXISTING BUILDING OPERATIONS. COORDINATE WITH THE OWNER THE LOCATION OF ON-SITE STORAGE AND STAGING.
4. NOT ALL REQUIRED PATCHING AND/OR REPAIRS ARE SPECIFICALLY NOTED ON THIS PLAN.
5. COORDINATE DEMOLITION WORK WITH NEW PROPOSED FLOOR PLANS.
6. CONTRACTOR SHALL DISCARD AND DISPOSE OF ALL DEMOLISHED ITEMS.
7. EXISTING PIPING AND ELECTRICAL OR COMMUNICATION CONDUITS WHICH INTERFERE WITH THE WORK SHALL BE RE-ROUTED BY THE CONTRACTOR.

MECHANICAL LEGEND

DESCRIPTION	SYMBOL
SUPPLY AIR DUCT SECTION	SA
RETURN AIR DUCT SECTION	RA
DUCT SIZE NET INSIDE DIMENSION	12 x 8
EXHAUST AIR DUCT SECTION	EA
SPLITTER DAMPER W/ LOCKING QUADRANT	
FLEXIBLE DUCT CONNECTION	
DUCT DROP/RISE	
DOOR LOUVER	
AIR EXTRACTOR	
ACCESS DOOR - A.D.	AD
VOLUME DAMPER W/ LOCKING QUADRANT	
AUTO MOTORIZED CONTROLLED DAMPER	MD
FIRE DAMPER / CEILING FIRE DAMPER	FD / FD/CFD
MOTORIZED FIRE / SMOKE DAMPER	FSD

1ST LETTER - LOCATION: C-CEILING, W-WALL, F-FLOOR
2ND LETTER - SERVICE: S-SUPPLY, R-RETURN, E-EXHAUST
NUMBER: 5-SEE SCH FOR TYPE
CS-5 300 CFM 12x12
CS-5 300 CFM 12x12
WS-1 300 CFM 14x8
300 CFM = CUBIC FEET PER MINUTE
12 X 12 = NECK SIZE

DESCRIPTION	SYMBOL
SMOKE DETECTOR	SD
DUCT WITH ACOUSTICAL LINING	
TO BE REMOVED	-X-X-X-X-X-X-X-
THERMOSTAT	T 1-8
SENSOR	S 1-8
2-WAY CONTROL VALVE	
3-WAY CONTROL VALVE	
BALANCE VALVE	
BUTTERFLY VALVE	
CHECK VALVE	
FLEXIBLE COUPLING	
GLOBE VALVE	
MANUAL AIR VENT - MAV	
PETES PLUG	
PRESSURE GAUGE	P
REDUCER	
SHUT OFF COCK	
SHUT OFF VALVE	
STRAINER	
THERMOMETER	T
UNION	
CHILLED WATER SUPPLY	CHWS
CHILLED WATER RETURN	CHWR
CONDENSATE DRAIN	CD
COOLING TOWER MAKE-UP (WATER)	CT MU
CONDENSER WATER SUPPLY	CWS
CONDENSER WATER RETURN	CWR
HEATING HOT WATER SUPPLY	HHWS
HEATING HOT WATER RETURN	HHWR
HIGH PRESSURE STEAM	HPS
LOW PRESSURE STEAM	LPS
MAKE-UP WATER	MU
ABOVE	ABV
ABOVE FINISHED FLOOR	A.F.F.
ACCESS DOOR / ACCESS PANEL	A.D. / A.P.
ANALOG INPUT / ANALOG OUTPUT	AI / AO
AUTOMATIC AIR VENT	AAV
BELOW	BEL.
CEILING	CLG
CONCRETE	CONC.
CUBIC FEET PER HOUR (1000 BTU)	CFH
CUBIC FEET PER MINUTE	CFM
DIFFERENTIAL PRESSURE TRANSDUCER	DPT
DIGITAL INPUT / DIGITAL OUTPUT	DI / DO
EXISTING	(E)
FLOW SWITCH	FS
GALLONS PER MINUTE	GPM
THOUSANDS OF BTU'S PER HOUR	MBH
NEW	(N)
NOT IN MECHANICAL CONTRACT	N.I.M.C.
OUTSIDE AIR	OSA
POINT OF CONNECTION	POC
REFRIGERANT LIQUID / REFRIGERANT SUCTION	RL / RS
TEMPERATURE CONTROL PANEL	TCP
VALVE	V
WELL TEMPERATURE SENSOR	WTS

SHEET INDEX

SHEET NO.	DESCRIPTION
M1.00	MECHANICAL - LEGEND, NOTES AND SCHEDULES
M1.01	MECHANICAL - GREEN BUILDING CODE NOTES
M2.00	MECHANICAL - DEMOLITION FLOOR PLAN
M2.01	MECHANICAL - DEMOLITION ROOF PLAN
M3.00	MECHANICAL - FLOOR PLAN
M3.01	MECHANICAL - ROOF PLAN
M4.00	MECHANICAL - DETAILS
M4.01	MECHANICAL - DETAILS
M4.02	MECHANICAL - DETAILS
M5.00	MECHANICAL - PLYMOVENT LAYOUT, DETAILS, & SCHEDULE
M5.01	MECHANICAL - DETAILS (PLYMOVENT - SBTA SYSTEM)
M5.02	MECHANICAL - DETAILS (PLYMOVENT - VSRX SYSTEM)
T24.01	ENERGY COMPLIANCE
T24.02	ENERGY COMPLIANCE
T24.03	ENERGY COMPLIANCE

DESIGNERS & ARCHITECTS

Architect:
LDA Partners, LLP
Designers & Architects
222 Central Court
Stockton, CA 95204
209.943.0405
www.ldapartners.com

LICENSED ARCHITECT
ERIC WILLIAM WOHLE
C28388
September 2021
STATE OF CALIFORNIA

Client:
LATHROP-MANTECA FIRE PROTECTION DISTRICT
19001 SOMERSTON PARKWAY
LATHROP, CA 95330
209.941.5102

Project:
FIRE STATION 31 UPGRADES

800 J STREET
LATHROP CA 95330

Project No.: ###-#-##
Drawn By: DW
Checked By: GL

No.	Description	Date	By
1	PLAN CHECK #1 1ST REVIEW CYCLE	10-21-2020	
2	PLAN CHECK #2 ADDENDA 1	12-09-2020	

3RD SUBMITTAL - BLDG. DEPT.
12/09/2020

MECHANICAL -
LEGEND, NOTES & SCHEDULES

REGISTERED PROFESSIONAL ENGINEER
ALLEN LAYMAN
M30029
JUNE 30, 2022
MECHANICAL
STATE OF CALIFORNIA

neXus engineering
Consulting Mechanical Engineers
1400 Lone Palm Ave, Suite A
Modesto, CA 95351
Tel: 209.572.7399 Fax: 209.236.1579
www.nexusengineering.net
HVAC . Plumbing/Piping . Fire Sprinklers
Process/Plant Engineering . Refrigeration

M1.00

J:\2020 Jobs\20140 - Lathrop Fire Station\20140 - Mechanical.dwg, 12/9/2020 2:24:39 PM, DWG To PDF.pc3

MECHANICAL GREEN BUILDING CODE NOTES

REQUIRED

SECTION 5.410 BUILDING MAINTENANCE AND OPERATIONS

5.410.1 RECYCLING BY OCCUPANTS. PROVIDE READILY ACCESSIBLE AREAS THAT SERVE THE ENTIRE BUILDING AND ARE IDENTIFIED FOR THE DEPOSITING, STORAGE AND COLLECTION OF NON-HAZARDOUS MATERIALS FOR RECYCLING, INCLUDING (AT A MINIMUM) PAPER, CORRUGATED CARDBOARD, GLASS, PLASTICS, ORGANIC WASTE, AND METALS OR MEET A LAWFULLY ENACTED LOCAL RECYCLING ORDINANCE, IF MORE RESTRICTIVE.

EXCEPTION: RURAL JURISDICTIONS THAT MEET AND APPLY FOR THE EXEMPTION IN PUBLIC RESOURCES
CODE 42649.82 (A)(2)(A) ET SEQ. SHALL ALSO BE EXEMPT FROM THE ORGANIC WASTE PORTION OF THIS SECTION.

5.410.1.1 ADDITIONS. ALL ADDITIONS CONDUCTED WITHIN A 12-MONTH PERIOD UNDER SINGLE OR MULTIPLE PERMITS, RESULTING IN AN INCREASE OF 30% OR MORE IN FLOOR AREA, SHALL PROVIDE RECYCLING AREAS ON SITE.

EXCEPTION: ADDITIONS WITHIN A TENANT SPACE RESULTING IN LESS THAN A 30% INCREASE IN THE TENANT SPACE FLOOR AREA.

5.410.1.2 SAMPLE ORDINANCE. SPACE ALLOCATION FOR RECYCLING AREAS SHALL COMPLY WITH CHAPTER 18, PART 3, DIVISION 30 OF THE PUBLIC RESOURCES CODE. CHAPTER 18 IS KNOWN AS THE CALIFORNIA SOLID WASTE REUSE AND RECYCLING ACCESS ACT OF 1991 (ACT).

NOTE: A SAMPLE ORDINANCE FOR USE BY LOCAL AGENCIES MAY BE FOUND IN APPENDIX A OF THE DOCUMENT AT THE CALRECYCLE'S WEB SITE.

[ ] 5.410.2 COMMISSIONING. [N] FOR NEW BUILDINGS 10,000 SQUARE FEET AND OVER, BUILDING COMMISSIONING SHALL BE INCLUDED IN THE DESIGN AND CONSTRUCTION PROCESSES OF THE BUILDING PROJECT TO VERIFY THAT THE BUILDING SYSTEMS AND COMPONENTS MEET THE OWNER'S OR OWNER REPRESENTATIVE'S PROJECT REQUIREMENTS. COMMISSIONING SHALL BE PERFORMED IN ACCORDANCE WITH THIS SECTION BY TRAINED PERSONNEL WITH EXPERIENCE ON PROJECTS OF COMPARABLE SIZE AND COMPLEXITY. ALL OCCUPANCIES OTHER THAN I-OCCUPANCIES AND L-OCCUPANCIES SHALL COMPLY WITH THE CALIFORNIA ENERGY CODE AS PRESCRIBED IN CALIFORNIA ENERGY CODE SECTION 120.8. FOR I-OCCUPANCIES THAT ARE NOT REGULATED BY OSHPD OR FOR I-OCCUPANCIES AND L-OCCUPANCIES THAT ARE NOT REGULATED BY THE CALIFORNIA ENERGY CODE SECTION 100.0 SCOPE, ALL REQUIREMENTS IN SECTIONS 5.410.2 THROUGH 5.410.2.6 SHALL APPLY.

COMMISSIONING REQUIREMENTS SHALL INCLUDE:

1. OWNER'S OR OWNER REPRESENTATIVE'S PROJECT REQUIREMENTS.
2. BASIS OF DESIGN.
3. COMMISSIONING MEASURES SHOWN IN THE CONSTRUCTION DOCUMENTS.
4. COMMISSIONING PLAN.
5. FUNCTIONAL PERFORMANCE TESTING.
6. DOCUMENTATION AND TRAINING.
7. COMMISSIONING REPORT.

[X] EXCEPTIONS:

1. UNCONDITIONED WAREHOUSES OF ANY SIZE.
2. AREAS LESS THAN 10,000 SQUARE FEET USED FOR OFFICES OR OTHER CONDITIONED ACCESSORY SPACES WITHIN UNCONDITIONED WAREHOUSES.
3. TENANT IMPROVEMENTS LESS THAN 10,000 SQUARE FEET AS DESCRIBED IN SECTION 303.1.1.
4. OPEN PARKING GARAGES OF ANY SIZE, OR OPEN PARKING GARAGE AREAS, OF ANY SIZE, WITHIN A STRUCTURE.

NOTE: FOR THE PURPOSES OF THIS SECTION, UNCONDITIONED SHALL MEAN A BUILDING, AREA, OR ROOM WHICH DOES NOT PROVIDE HEATING AND OR AIR CONDITIONING.

INFORMATIONAL NOTES:

1. IAS AC 476 IS AN ACCREDITATION CRITERIA FOR ORGANIZATIONS PROVIDING TRAINING AND/OR CERTIFICATION OF COMMISSIONING PERSONNEL. AC 476 IS AVAILABLE TO THE AUTHORITY HAVING JURISDICTION AS A REFERENCE FOR QUALIFICATIONS OF COMMISSIONING PERSONNEL. AC 476 DES NOT CERTIFY INDIVIDUALS TO CONDUCT FUNCTIONAL PERFORMANCE TESTS OR TO ADJUST AND BALANCE SYSTEMS.

2. FUNCTIONAL PERFORMANCE TESTING FOR HEATING, VENTILATION, AIR CONDITIONING SYSTEMS AND LIGHTING CONTROLS MUST BE PERFORMED IN COMPLIANCE WITH THE CALIFORNIA ENERGY CODE.

5.410.2.1 OWNER'S OR OWNER REPRESENTATIVE'S PROJECT REQUIREMENTS (OPR). [N] THE EXPECTATIONS AND REQUIREMENTS OF THE BUILDING APPROPRIATE TO ITS PHASE SHALL BE DOCUMENTED BEFORE THE DESIGN PHASE OF THE PROJECT BEGINS. THIS DOCUMENTATION SHALL INCLUDE THE FOLLOWING:
1. ENVIRONMENTAL AND SUSTAINABILITY GOALS.
2. ENERGY EFFICIENCY GOALS.
3. INDOOR ENVIRONMENTAL QUALITY REQUIREMENTS.
4. PROJECT PROGRAM, INCLUDING FACILITY FUNCTIONS AND HOURS OF OPERATION, AND NEED FOR AFTER HOURS OPERATION.
5. EQUIPMENT AND SYSTEMS EXPECTATIONS.
6. BUILDING OCCUPANT AND OPERATION AND MAINTENANCE (O&M) PERSONNEL EXPECTATIONS.

5.410.2.2 BASIS OF DESIGN (BOD). [N] A WRITTEN EXPLANATION OF HOW THE DESIGN OF THE BUILDING SYSTEMS MEETS THE OPR SHALL BE COMPLETED AT THE DESIGN PHASE OF THE BUILDING PROJECT. THE BASIS OF DESIGN DOCUMENT SHALL COVER THE FOLLOWING SYSTEMS:

1. HEATING, VENTILATION, AIR CONDITIONING (HVAC) SYSTEMS AND CONTROLS.
2. INDOOR LIGHTING SYSTEM AND CONTROLS.
3. WATER HEATING SYSTEM.
4. RENEWABLE ENERGY SYSTEMS.
5. WATER REUSE SYSTEMS.

5.410.2.3 COMMISSIONING PLAN. [N] PRIOR TO PERMIT ISSUANCE A COMMISSIONING PLAN SHALL BE COMPLETED TO DOCUMENT HOW THE PROJECT WILL BE COMMISSIONED. THE COMMISSIONING PLAN SHALL INCLUDE THE FOLLOWING:
1. GENERAL PROJECT INFORMATION.
2. COMMISSIONING GOALS.
3. SYSTEMS TO BE COMMISSIONED. PLANS TO TEST SYSTEMS AND COMPONENTS SHALL INCLUDE:
   A. AN EXPLANATION OF THE ORIGINAL DESIGN INTENT.
   B. EQUIPMENT AND SYSTEMS TO BE TESTED, INCLUDING THE EXTENT OF TESTS.
   C. FUNCTIONS TO BE TESTED.
   D. CONDITIONS UNDER WHICH THE TEST SHALL BE PERFORMED.
   E. MEASURABLE CRITERIA FOR ACCEPTABLE PERFORMANCE.
4. COMMISSIONING TEAM INFORMATION.
5. COMMISSIONING PROCESS ACTIVITIES, SCHEDULES AND RESPONSIBILITIES. PLANS FOR THE COMPLETION OF COMMISSIONING SHALL BE INCLUDED.

5.410.2.4 FUNCTIONAL PERFORMANCE TESTING. [N] FUNCTIONAL PERFORMANCE TESTS SHALL DEMONSTRATE THE CORRECT INSTALLATION AND OPERATION OF EACH COMPONENT, SYSTEM AND SYSTEM-TO-SYSTEM INTERFACE IN ACCORDANCE WITH THE APPROVED PLANS AND SPECIFICATIONS. FUNCTIONAL PERFORMANCE TESTING REPORTS SHALL CONTAIN INFORMATION ADDRESSING EACH OF THE BUILDING COMPONENTS TESTED, THE TESTING METHODS UTILIZED, AND INCLUDE ANY READINGS AND ADJUSTMENTS MADE.

REQUIRED

5.410.2.5 DOCUMENTATION AND TRAINING. [N] A SYSTEMS MANUAL AND SYSTEMS OPERATIONS TRAINING ARE REQUIRED, INCLUDING OCCUPATIONAL SAFETY AND HEALTH ACT (OSHA) REQUIREMENTS IN CALIFORNIA CODE OF REGULATIONS (CCR), TITLE 8, SECTION 5142, AND OTHER RELATED REGULATIONS.

5.410.2.5.1 SYSTEMS MANUAL. [N] DOCUMENTATION OF THE OPERATIONAL ASPECTS OF THE BUILDING SHALL BE COMPLETED WITHIN THE SYSTEMS MANUAL AND DELIVERED TO THE BUILDING OWNER OR REPRESENTATIVE. THE SYSTEMS MANUAL SHALL INCLUDE THE FOLLOWING:
1. SITE INFORMATION, INCLUDING FACILITY DESCRIPTION, HISTORY AND CURRENT REQUIREMENTS.
2. SITE CONTACT INFORMATION.
3. BASIC OPERATIONS AND MAINTENANCE, INCLUDING GENERAL SITE OPERATING PROCEDURES, BASIC TROUBLESHOOTING, RECOMMENDED MAINTENANCE REQUIREMENTS, SITE EVENTS LOG.
4. MAJOR SYSTEMS.
5. SITE EQUIPMENT INVENTORY AND MAINTENANCE NOTES.
6. A COPY OF VERIFICATIONS REQUIRED BY THE ENFORCING AGENCY OR THIS CODE.
7. OTHER RESOURCES AND DOCUMENTATION, IF APPLICABLE.

5.410.2.5.2 SYSTEMS OPERATIONS TRAINING. [N] A PROGRAM FOR TRAINING OF THE APPROPRIATE MAINTENANCE STAFF FOR EACH EQUIPMENT TYPE AND/OR SYSTEM SHALL BE DEVELOPED AND DOCUMENTED IN THE COMMISSIONING REPORT AND SHALL INCLUDE THE FOLLOWING:
1. SYSTEM/EQUIPMENT OVERVIEW (WHAT IT IS, WHAT IT DOES AND WITH WHAT OTHER SYSTEMS AND/OR EQUIPMENT IT INTERFACES).
2. REVIEW AND DEMONSTRATION OF SERVICING/PREVENTIVE MAINTENANCE.
3. REVIEW OF THE INFORMATION IN THE SYSTEMS MANUAL.
4. REVIEW OF THE RECORD DRAWINGS ON THE SYSTEM/EQUIPMENT.

5.410.2.6 COMMISSIONING REPORT. [N] A REPORT OF COMMISSIONING PROCESS ACTIVITIES UNDERTAKEN THROUGH THE DESIGN AND CONSTRUCTION PHASES OF THE BUILDING PROJECT SHALL BE COMPLETED AND PROVIDED TO THE OWNER OR REPRESENTATIVE.

[X] 5.410.4 TESTING AND ADJUSTING. TESTING AND ADJUSTING OF SYSTEMS SHALL BE REQUIRED FOR BUILDINGS LESS THAN 10,000 SQUARE FEET OR NEW SYSTEMS TO SERVE AN ADDITION OR ALTERATION SUBJECT TO SECTION 303.1.

5.410.4.2 SYSTEMS. DEVELOP A WRITTEN PLAN OF PROCEDURES FOR TESTING AND ADJUSTING SYSTEMS. SYSTEMS TO BE INCLUDED FOR TESTING AND ADJUSTING SHALL INCLUDE AT A MINIMUM, AS APPLICABLE TO THE PROJECT:

1. HVAC SYSTEMS AND CONTROLS.
2. INDOOR AND OUTDOOR LIGHTING AND CONTROLS.
3. WATER HEATING SYSTEMS.
4. RENEWABLE ENERGY SYSTEMS.
5. LANDSCAPE IRRIGATION SYSTEMS.
6. WATER REUSE SYSTEMS.

[X] 5.410.4.3 PROCEDURES. PERFORM TESTING AND ADJUSTING PROCEDURES IN ACCORDANCE WITH MANUFACTURER'S SPECIFICATIONS AND APPLICABLE STANDARDS ON EACH SYSTEM.

5.410.4.3.1 HVAC BALANCING. IN ADDITION TO TESTING AND ADJUSTING, BEFORE A NEW SPACE-CONDITIONING SYSTEM SERVING A BUILDING OR SPACE IS OPERATED FOR NORMAL USE, THE SYSTEM SHALL BE BALANCED IN ACCORDANCE WITH THE PROCEDURES DEFINED BY THE TESTING ADJUSTING AND BALANCING BUREAU NATIONAL STANDARDS; THE NATIONAL ENVIRONMENTAL BALANCING BUREAU PROCEDURAL STANDARDS; ASSOCIATED AIR BALANCE COUNCIL NATIONAL STANDARDS OR AS APPROVED BY THE ENFORCING AGENCY.

[X] 5.410.4.4 REPORTING. AFTER COMPLETION OF TESTING, ADJUSTING AND BALANCING, PROVIDE A FINAL REPORT OF TESTING SIGNED BY THE INDIVIDUAL RESPONSIBLE FOR PERFORMING THESE SERVICES.

[X] 5.410.4.5 OPERATION AND MAINTENANCE (O & M) MANUAL. PROVIDE THE BUILDING OWNER OR REPRESENTATIVE WITH DETAILED OPERATING AND MAINTENANCE INSTRUCTIONS AND COPIES OF GUARANTIES/WARRANTIES FOR EACH SYSTEM. O & M INSTRUCTIONS SHALL BE CONSISTENT WITH OSHA REQUIREMENTS IN CCR, TITLE 8, SECTION 5142, AND OTHER RELATED REGULATIONS.

5.410.4.5.1 INSPECTIONS AND REPORTS. INCLUDE A COPY OF ALL INSPECTION VERIFICATIONS AND REPORTS REQUIRED BY THE ENFORCING AGENCY.

DIVISION 5.5 ENVIRONMENTAL QUALITY

SECTION 5.501 GENERAL

5.501.1 SCOPE. THE PROVISIONS OF THIS CHAPTER SHALL OUTLINE MEANS OF REDUCING THE QUANTITY OF AIR CONTAMINANTS THAT ARE ODOROUS, IRRITATING, AND/OR HARMFUL TO THE COMFORT AND WELL-BEING OF A BUILDING'S INSTALLERS, OCCUPANTS AND NEIGHBORS.

SECTION 5.502 DEFINITIONS

5.502.1 DEFINITIONS. THE FOLLOWING TERMS ARE DEFINED IN CHAPTER 2 (AND ARE INCLUDED HERE FOR REFERENCE)

ARTERIAL HIGHWAY. A GENERAL TERM DENOTING A HIGHWAY PRIMARILY FOR THROUGH TRAFFIC USUALLY ON A CONTINUOUS ROUTE.

A-WEIGHTED SOUND LEVEL (DBA). THE SOUND PRESSURE LEVEL IN DECIBELS AS MEASURED ON A SOUND LEVEL METER USING THE INTERNATIONALLY STANDARDIZED A-WEIGHTING FILTER OR AS COMPUTED FROM SOUND SPECTRAL DATA TO WHICH A-WEIGHTING ADJUSTMENTS HAVE BEEN MADE.

1 BTU/HOUR. BRITISH THERMAL UNITS PER HOUR, ALSO REFERRED TO AS BTU. THE AMOUNT OF HEAT REQUIRED TO RAISE ONE POUND OF WATER ONE DEGREE FAHRENHEIT PER HOUR, A COMMON MEASURE OF HEAT TRANSFER RATE. A TON OF REFRIGERATION IS 12,000 BTU, THE AMOUNT OF HEAT REQUIRED TO MELT A TON (2,000 POUNDS) OF ICE AT 32^0 FAHRENHEIT.

COMMUNITY NOISE EQUIVALENT LEVEL (CNEL). A METRIC SIMILAR TO THE DAY-NIGHT AVERAGE SOUND LEVEL (LDN), EXCEPT THAT A 5 DECIBEL ADJUSTMENT IS ADDED TO THE EQUIVALENT CONTINUOUS SOUND EXPOSURE LEVEL FOR EVENING HOURS (7PM TO 10PM) IN ADDITION TO THE 10 DB NIGHTTIME ADJUSTMENT USED IN THE LDN.

COMPOSITE WOOD PRODUCTS. COMPOSITE WOOD PRODUCTS INCLUDE HARDWOOD PLYWOOD, PARTICLEBOARD AND MEDIUM DENSITY FIBERBOARD. ©COMPOSITE WOOD PRODUCTS" DOES NOT INCLUDE HARDBOARD, STRUCTURAL PLYWOOD, STRUCTURAL PANELS, STRUCTURAL COMPOSITE LUMBER, ORIENTED STRAND BOARD, GLUED LAMINATED TIMBER, TIMBER, PREFABRICATED WOOD I-JOISTS OR FINGER-JOINTED LUMBER, ALL AS SPECIFIED IN CALIFORNIA CODE OF REGULATIONS (CCR), TITLE 17, SECTION 93120.1(A).

NOTE: SEE CCR, TITLE 17, SECTION 93120.1.

DAY-NIGHT AVERAGE SOUND LEVEL (LDN). THE A-WEIGHTED EQUIVALENT CONTINUOUS SOUND EXPOSURE LEVEL FOR A 24-HOUR PERIOD WITH A 10 DB ADJUSTMENT ADDED TO SOUND LEVELS OCCURRING DURING NIGHTTIME HOURS (10P.M. TO 7 A.M.).

DECIBEL (DB). A MEASURE ON A LOGARITHMIC SCALE OF THE MAGNITUDE OF A PARTICULAR QUANTITY (SUCH AS SOUND PRESSURE, SOUND POWER, SOUND INTENSITY) WITH RESPECT TO A REFERENCE QUANTITY.

ELECTRIC VEHICLE (EV). AN AUTOMOTIVE-TYPE VEHICLE FOR ON-ROAD USE, SUCH AS PASSENGER AUTOMOBILES, BUSES, TRUCKS, VANS, NEIGHBORHOOD ELECTRIC VEHICLES, ELECTRIC MOTORCYCLES, AND THE LIKE, PRIMARILY POWERED BY AN ELECTRIC MOTOR THAT DRAWS CURRENT FROM A RECHARGEABLE STORAGE BATTERY, FUEL CELL, PHOTOVOLTAIC ARRAY, OR OTHER SOURCE OF ELECTRIC CURRENT. PLUG-IN HYBRID ELECTRIC VEHICLES (PHEV) ARE CONSIDERED ELECTRIC VEHICLES. FOR PURPOSES OF THE CALIFORNIA ELECTRICAL CODE, OFF-ROAD, SELF-PROPOELLED ELECTRIC VEHICLES, SUCH AS INDUSTRIAL TRUCKS, HOISTS, LIFTS, TRANSPORTS, GOLF CARTS, AIRLINE GROUND SUPPORT EQUIPMENT, TRACTORS, BOATS, AND THE LIKE, ARE NOT INCLUDED.

REQUIRED

SECTION 5.502 DEFINITIONS (CONT)

ELECTRIC VEHICLE CHARGING STATION(S) (EVCSJ). ONE OR MORE SPACES INTENDED FOR CHARGING ELECTRIC VEHICLES.

ELECTRIC VEHICLE SUPPLY EQUIPMENT (EVSE). THE CONDUCTORS, INCLUDING THE UNGROUNDED, GROUNDED, AND EQUIPMENT GROUNDING CONDUCTORS AND THE ELECTRIC VEHICLE CONNECTORS, ATTACHMENT PLUGS, AND ALL OTHER FITTINGS, DEVICES, POWER OUTLETS, OR APPARATUS INSTALLED SPECIFICALLY FOR THE PURPOSE OF TRANSFERRING ENERGY BETWEEN THE PREMISES WIRING AND THE ELECTRIC VEHICLE.

ENERGY EQUIVALENT (NOISE) LEVEL (LEQ). THE LEVEL OF A STEADY NOISE WHICH WOULD HAVE THE SAME ENERGY AS THE FLUCTUATING NOISE LEVEL INTEGRATED OVER THE TIME OF PERIOD OF INTEREST.

EXPRESSWAY. AN ARTERIAL HIGHWAY FOR THROUGH TRAFFIC WHICH MAY HAVE PARTIAL CONTROL OF ACCESS, BUT WHICH MAY OR MAY NOT BE DIVIDED OR HAVE GRADE SEPARATIONS AT INTERSECTIONS.

FREEWAY. A DIVIDED ARTERIAL HIGHWAY WITH FULL CONTROL OF ACCESS AND WITH GRADE SEPARATIONS AT INTERSECTIONS.

GLOBAL WARMING POTENTIAL (GWP). THE RADIATIVE FORCING IMPACT OF ONE MASS-BASED UNIT OF A GIVEN GREENHOUSE GAS RELATIVE TO AN EQUIVALENT UNIT OF CARBON DIOXIDE OVER A GIVEN PERIOD OF TIME. CARBON DIOXIDE IS THE REFERENCE COMPOUND WITH A GWP OF ONE.

GLOBAL WARMING POTENTIAL VALUE (GWP VALUE). A 100-YEAR GWP VALUE PUBLISHED BY THE INTERGOVERNMENTAL PANEL ON CLIMATE CHANGE (IPCC) IN EITHER ITS SECOND ASSESSMENT REPORT (SAR) (IPCC, 1995); OR ITS FOURTH ASSESSMENT A-3 REPORT (AR4) (IPCC, 2007). THE SAR GWP VALUES ARE FOUND IN COLUMN "SAR (100-YR)" OF TABLE 2.14.; THE AR4 GWP VALUES ARE FOUND IN COLUMN "100 YR" OF TABLE 2.14.

HIGH-GWP REFRIGERANT. A COMPOUND USED AS A HEAT TRANSFER FLUID OR GAS THAT IS: (A) A CHLOROFLUOROCARBON, A HDROCHLOROFLUOROCARBON, A HYDROFLUOROCARBON, A PERFLUOROCARBON, OR ANY COMPOUND OR BLEND OF COMPOUNDS, WITH A GWP VALUE EQUAL TO OR GREATER THAN 150, OR (B) ANY OZONE DEPLETING SUBSTANCE AS DEFINED IN TITLE 40 OF THE CODE OF FEDERAL REGULATIONS, PART 82, SEC.82.3 (AS AMENDED MARCH 10, 2009).

LONG RADIUS ELBOW. PIPE FITTING INSTALLED BETWEEN TWO LENGTHS OF PIPE OR TUBING TO ALLOW A CHANGE OF DIRECTION, WITH A RADIUS 1.5 TIMES THE PIPE DIAMETER.

LOW-GWP REFRIGERANT. A COMPOUND USED AS A HEAT TRANSFER FLUID OR GAS THAT: (A) HAS A GWP VALUE LESS THAN 150, AND (B) IS NOT AN OZONE DEPLETING SUBSTANCE AS DEFINED IN TITLE 40 OF THE CODE OF FEDERAL REGULATIONS, PART 82, SEC.82.3 (AS AMENDED MARCH 10, 2009).

MERV. FILTER MINIMUM EFFICIENCY REPORTING VALUE, BASED ON ASHRAE 52.2-1999.

MAXIMUM INCREMENTAL REACTIVITY (MIR). THE MAXIMUM CHANGE IN WEIGHT OF OZONE FORMED BY ADDING A COMPOUND TO THE "BASE REACTIVE ORGANIC GAS (ROG) MIXTURE" PER WEIGHT OF COMPOUND ADDED, EXPRESSED TO HUNDRETHS OF A GRAM ($G\ O^3/G$ ROC).

PRODUCT-WEIGHTED MIR (PWMIR). THE SUM OF ALL WEIGHTED-MIR FOR ALL INGREDIENTS IN A PRODUCT SUBJECT TO THIS ARTICLE. THE PWMIR IS THE TOTAL PRODUCT REACTIVITY EXPRESSED TO HUNDREDTHS OF A GRAM OF OZONE FORMED PER GRAM OF PRODUCT (EXCLUDING CONTAINER AND PACKAGING).

PSIG. POUNDS PER SQUARE INCH, GUAGE.

REACTIVE ORGANIC COMPOUND (ROC). ANY COMPOUND THAT HAS THE POTENTIAL, ONCE EMITTED, TO CONTRIBUTE TO OZONE FORMATION IN THE TROPOSPHERE.

SCHRADER ACCESS VALVES. ACCESS FITTINGS WITH A VALVE CORE INSTALLED.

SHORT RADIUS ELBOW. PIPE FITTING INSTALLED BETWEEN TWO LENGTHS OF PIPE OR TUBING TO ALLOW A CHANGE OF DIRECTION, WITH A RADIUS 1.0 TIMES THE PIPE DIAMETER.

SUPERMARKET. FOR THE PURPOSES OF SECTION 5.508.2, A SUPERMARKET IS ANY RETAIL FOOD FACILITY WITH 8,000 SQUARE FEET OR MORE CONDITIONED AREA, AND THAT UTILIZES EITHER REFRIGERATED DISPLAY CASES, OR WALK-IN COOLERS OR FREEZERS CONNECTED TO REMOTE COMPRESSOR UNITS OR CONDENSING UNITS.

VOC. A VOLATILE ORGANIC COMPOUND BROADLY DEFINED AS A CHEMICAL COMPOUND BASED ON CARBON CHAINS OR RINGS WITH VAPOR PRESSURES GREATER THAN 0.1 MILLIMETERS OF MERCURY AT ROOM TEMPERATURE. THESE COMPOUNDS TYPICALLY CONTAIN HYDROGEN AND MAY CONTAIN OXYGEN, NITROGEN AND OTHER ELEMENTS. SEE CCR TITLE 17, SECTION 94508(A).

NOTE: WHERE SPECIFIC REGULATIONS ARE CITED FROM DIFFERENT AGENCIES SUCH AS SCAQMD, ARB, ETC., THE VOC DEFINITION INCLUDED IN THAT SPECIFIC REGULATION IS THE ONE THAT PREVAILS FOR THE SPECIFIC MEASURE IN QUESTION.

SECTION 5.503 FIREPLACES

5.503.1 FIREPLACES. INSTALL ONLY A DIRECT-VENT SEALED-COMBUSTION GAS OR SEALED WOOD-BURNING FIREPLACE, OR A SEALED WOODSTOVE OR PELLET STOVE, AND REFER TO RESIDENTIAL REQUIREMENTS IN THE CALIFORNIA ENERGY CODE, TITLE 24, PART 6, SUBCHAPTER 7, SECTION 150. WOODSTOVES, PELLET STOVES AND FIREPLACES SHALL COMPLY WITH APPLICABLE LOCAL ORDINANCES.

5.503.1.1 WOODSTOVES. WOODSTOVES AND PELLET STOVES SHALL COMPLY WITH U.S. EPA NEW SOURCE PERFORMANCE STANDARDS (NSPS) EMISSION LIMITS AS APPLICABLE, AND SHALL HAVE A PERMANENT LABEL INDICATING THEY ARE CERTIFIED TO MEET THE EMISSION LIMITS.

SECTION 5.504 POLLUTANT CONTROL

[X] 5.504.1 TEMPORARY VENTILATION. THE PERMANENT HVAC SYSTEM SHALL ONLY BE USED DURING CONSTRUCTION IF NECESSARY TO CONDITION THE BUILDING OR AREAS OF ADDITION OR ALTERATION WITHIN THE REQUIRED TEMPERATURE RANGE FOR MATERIAL AND EQUIPMENT INSTALLATION. IF THE HVAC SYSTEM IS USED DURING CONSTRUCTION, USE RETURN AIR FILTERS WITH A MINIMUM EFFICIENCY REPORTING VALUE (MERV) OF 8, BASED ON ASHRAE 52.2-1999, OR AN AVERAGE EFFICIENCY OF 30% BASED ON ASHRAE 52.1-1992 REPLACE ALL FILTERS IMMEDIATELY PRIOR TO OCCUPANCY, OR, IF THE BUILDING IS OCCUPIED DURING ALTERATION, AT THE CONCLUSION OF CONSTRUCTION.

[X] 5.504.3 COVERING OF DUCT OPENINGS AND PROTECTION OF MECHANICAL EQUIPMENT DURING CONSTRUCTION. AT THE TIME OF ROUGH INSTALLATION, OR DURING STORAGE ON THE CONSTRUCTION SITE AND UNTIL FINAL STARTUP OF THE HEATING, COOLING AND VENTILATING EQUIPMENT, ALL DUCT AND OTHER RELATED AIR DISTRIBUTION COMPONENT OPENINGS SHALL BE COVERED WITH TAPE, PLASTIC, SHEET METAL OR OTHER METHODS ACCEPTABLE TO THE ENFORCING AGENCY TO REDUCE THE AMOUNT OF DUST, WATER AND DEBRIS WHICH MAY COLLECT IN THE SYSTEM.

LDA
DESIGNERS & ARCHITECTS

Architect:
LDA Partners, LLP
Designers & Architects
222 Central Court
Stockton, CA 95204
209.943.0405
www.ldapartners.com

LICENSED ARCHITECT
ERIC WILLIAM WOHLE
C28388
September 2021
STATE OF CALIFORNIA

Client:
LATHROP-MANTECA FIRE PROTECTION DISTRICT
19001 SOMERSTON PARKWAY
LATHROP, CA 95330
209.941.5102

Project:
FIRE STATION 31 UPGRADES

800 J STREET
LATHROP CA 95330

Project No.: ###-#-##
Drawn By: DW
Checked By: GL

No.	Description	Date	By
1	PLAN CHECK #1 1ST REVIEW CYCLE	10-21-2020	
2	PLAN CHECK #2 ADDENDA 1	12-09-2020	

3RD SUBMITTAL - BLDG. DEPT.
12/09/2020

REGISTERED PROFESSIONAL ENGINEER
ALLEN LAYMAN
M30029
JUNE 30, 2022
MECHANICAL
STATE OF CALIFORNIA

neXus engineering
Consulting Mechanical Engineers
1400 Lone Palm Ave, Suite A
Modesto, CA 95351
Tel: 209.572.7399 Fax: 209.236.1579
www.nexusengineering.net
HVAC . Plumbing/Piping . Fire Sprinklers
Process/Plant Engineering . Refrigeration

MECHANICAL -
GREEN BUILDING CODE NOTES

M1.01

J:\2020 Jobs\20140 - Lathrop Fire Station\20140 - Mechanical.dwg, 12/9/2020 2:24:41 PM, DWG To PDF.pc3

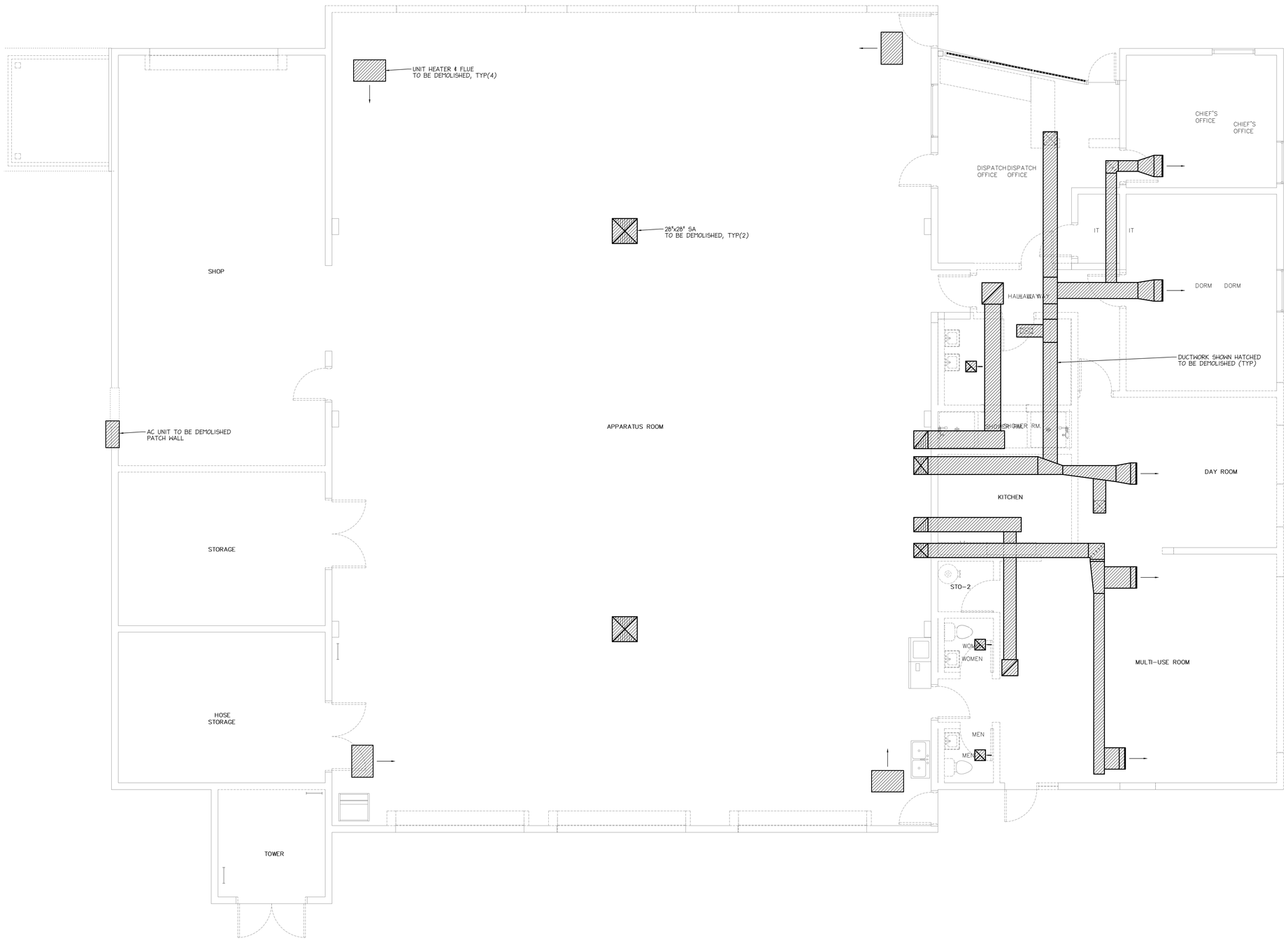

1 M2.00 MECHANICAL - DEMOLITION FLOOR PLAN

SCALE: 1/4" = 1'-0"

NORTH

LDA
DESIGNERS & ARCHITECTS

Architect:
LDA Partners, LLP
Designers & Architects
222 Central Court
Stockton, CA 95204
209.943.0405
www.ldapartners.com

LICENSED ARCHITECT
ERIC WILLIAM WHITE
C28388
September 2021
STATE OF CALIFORNIA

Client:
LATHROP-MANTECA FIRE
PROTECTION DISTRICT
19001 SOMERSTON PARKWAY
LATHROP, CA 95330
209.941.5102

Project:
FIRE STATION 31 UPGRADES

800 J STREET
LATHROP CA 95330

Project No.: ###-#-##
Drawn By: DW
Checked By: GL

No.	Description	Date	By
1	PLAN CHECK #1 1ST REVIEW CYCLE	10-21-2020	
2	PLAN CHECK #2 ADDENDA 1	12-09-2020	

3RD SUBMITTAL - BLDG. DEPT.
12/09/2020

MECHANICAL -
DEMOLITION FLOOR PLAN

M2.00

REGISTERED PROFESSIONAL ENGINEER
LEN LAU
C-35708
MECHANICAL
STATE OF CALIFORNIA

neXus engineering
Consulting Mechanical Engineers
1400 Lone Palm Ave, Suite A
Modesto, CA 95351
Tel: 209.572.7399 Fax: 209.236.1579
www.nexusengineering.net
HVAC . Plumbing/Piping . Fire Sprinklers
Process/Plant Engineering . Refrigeration

I:\2020 Jobs\20140 - Lathrop Fire Station\20140 - Mechanical.dwg, 12/9/2020 2:24:42 PM, DWG To PDF.pc3

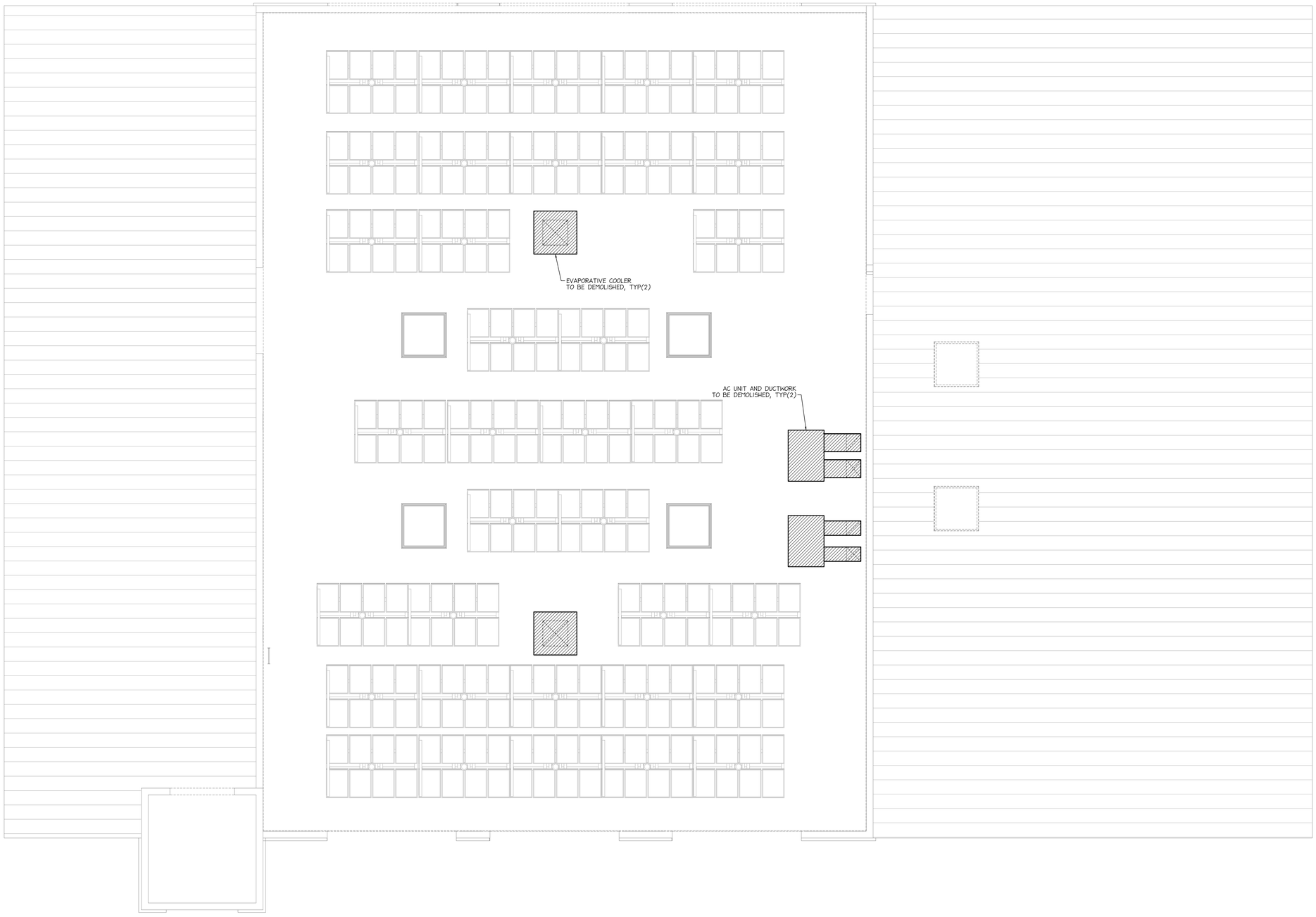

1 / M2.01 MECHANICAL - DEMOLITION ROOF PLAN

SCALE: 1/4" = 1'-0"

NORTH

LDA
DESIGNERS & ARCHITECTS

Architect:
LDA Partners, LLP
Designers & Architects
222 Central Court
Stockton, CA 95204
209.943.0405
www.ldapartners.com

LICENSED ARCHITECT
ERIC WILLIAM WHITE
C28388
September 2021
STATE OF CALIFORNIA

Client:
LATHROP-MANTECA FIRE PROTECTION DISTRICT
19001 SOMERSTON PARKWAY
LATHROP, CA 95330
209.941.5102

Project:
FIRE STATION 31 UPGRADES

800 J STREET
LATHROP CA 95330

Project No.: ###-#-##
Drawn By: DW
Checked By: GL

No.	Description	Date	By
1	PLAN CHECK #1 1ST REVIEW CYCLE	10-21-2020	
2	PLAN CHECK #2 ADDENDA 1	12-09-2020	

3RD SUBMITTAL - BLDG. DEPT.
12/09/2020

MECHANICAL -
DEMOLITION ROOF PLAN

M2.01

REGISTERED PROFESSIONAL ENGINEER
KEN LEE
MECHANICAL
STATE OF CALIFORNIA

neXus engineering
Consulting Mechanical Engineers
1400 Lone Palm Ave, Suite A
Modesto, CA 95351
Tel: 209.572.7399 Fax: 209.236.1579
www.nexusengineering.net
HVAC . Plumbing/Piping . Fire Sprinklers
Process/Plant Engineering . Refrigeration

J:\2020 Jobs\20140 - Lathrop Fire Station\20140 - Mechanical.dwg, 12/9/2020 2:24:43 PM, DWG To PDF.pc3

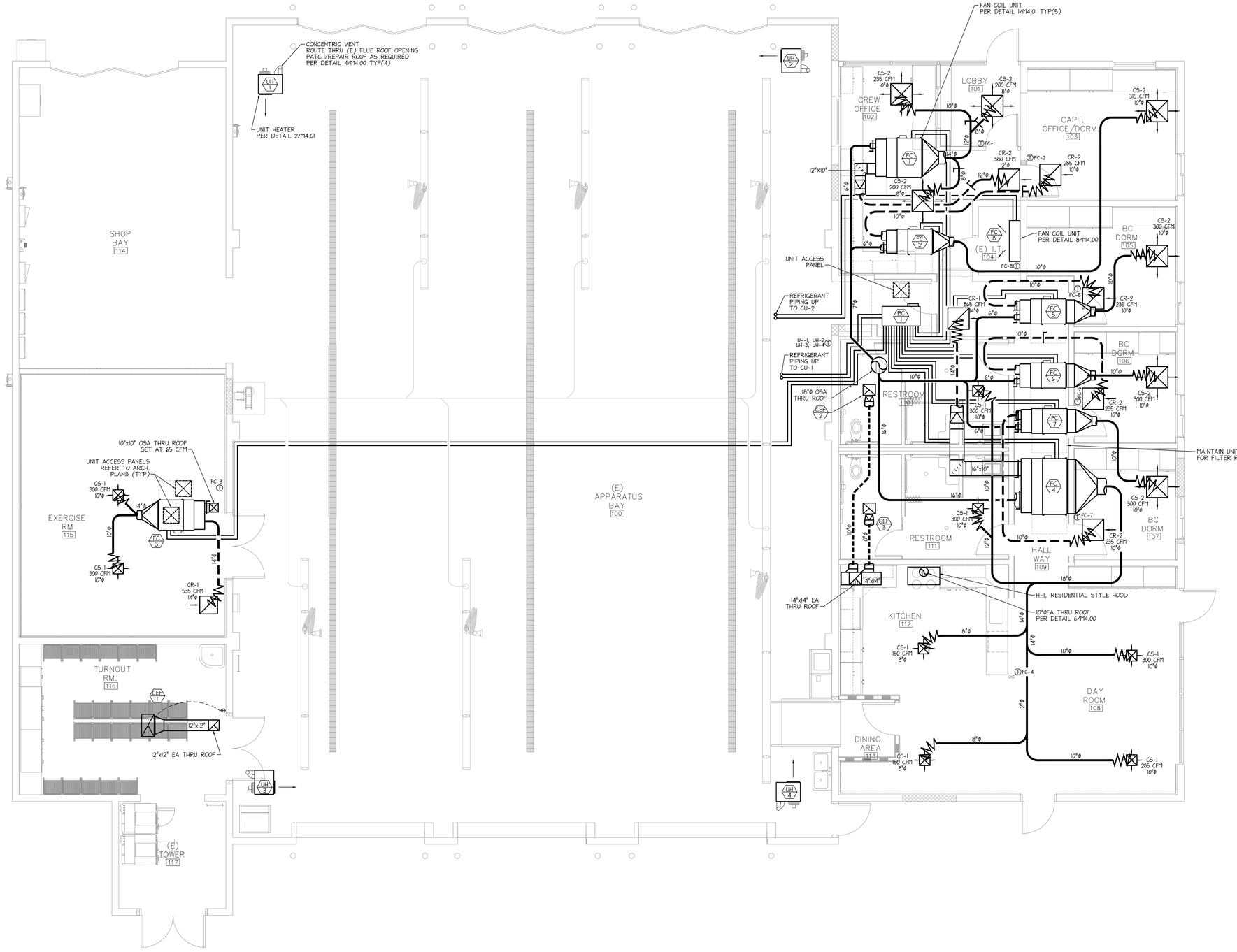

1 M3.00 MECHANICAL - FLOOR PLAN
SCALE: 1/4" = 1'-0"

NORTH

LDA DESIGNERS & ARCHITECTS

Architect:
LDA Partners, LLP
Designers & Architects
222 Central Court
Stockton, CA 95204
209.943.0405
www.ldapartners.com

LICENSED ARCHITECT ERIC WILLIAM WOHLE C28388 September 2021 STATE OF CALIFORNIA

Client:
LATHROP-MANTECA FIRE PROTECTION DISTRICT
19001 SOMERSTON PARKWAY
LATHROP, CA 95330
209.941.5102

Project:
FIRE STATION 31 UPGRADES

800 J STREET
LATHROP CA 95330

Project No.: ###-#-##
Drawn By: DW
Checked By: GL

No.	Description	Date	By
1	PLAN CHECK #1 1ST REVIEW CYCLE	10-21-2020	
2	PLAN CHECK #2 ADDENDA 1	12-09-2020	

3RD SUBMITTAL - BLDG. DEPT.
12/09/2020

MECHANICAL - FLOOR PLAN

M3.00

REGISTERED PROFESSIONAL ENGINEER ALLEN LAWRENCE 30709 12/12/2020 MECHANICAL STATE OF CALIFORNIA

neXus engineering
Consulting Mechanical Engineers
1400 Lone Palm Ave, Suite A
Modesto, CA 95351
Tel: 209.572.7399 Fax: 209.236.1579
www.nexusengineering.net
HVAC . Plumbing/Piping . Fire Sprinklers
Process/Plant Engineering . Refrigeration

J:\2020 Jobs\20140 - Lathrop Fire Station\20140 - Mechanical.dwg, 12/9/2020 2:24:44 PM, DWG To PDF.pc3

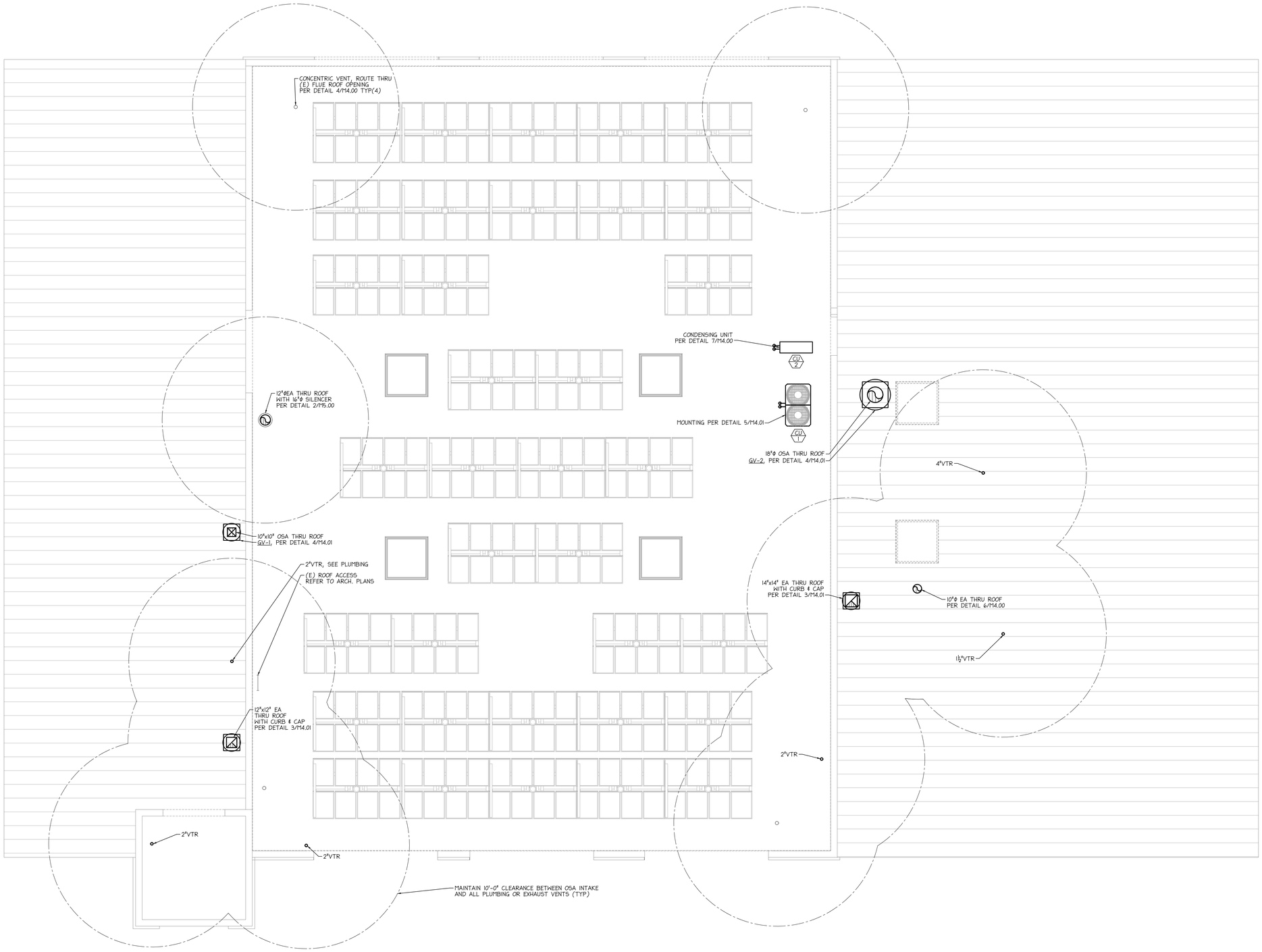

1 M3.01 MECHANICAL - ROOF PLAN
SCALE: ¼" = 1'-0"

NORTH

LDA
DESIGNERS & ARCHITECTS

Architect:
LDA Partners, LLP
Designers & Architects
222 Central Court
Stockton, CA 95204
209.943.0405
www.ldapartners.com

LICENSED ARCHITECT
ERIC WILLIAM WHITE
C28388
September 2021
STATE OF CALIFORNIA

Client:
LATHROP-MANTECA FIRE PROTECTION DISTRICT
19001 SOMERSTON PARKWAY
LATHROP, CA 95330
209.941.5102

Project:
FIRE STATION 31 UPGRADES

800 J STREET
LATHROP CA 95330

Project No.: ###-#-##
Drawn By: DW
Checked By: GL

No.	Description	Date	By
1	PLAN CHECK #1 1ST REVIEW CYCLE	10-21-2020	
2	PLAN CHECK #2 ADDENDA 1	12-09-2020	

3RD SUBMITTAL - BLDG. DEPT.
12/09/2020

MECHANICAL -
ROOF PLAN

M3.01

REGISTERED PROFESSIONAL ENGINEER
GREGORY LEE
MECHANICAL
STATE OF CALIFORNIA

neXus engineering
Consulting Mechanical Engineers
1400 Lone Palm Ave, Suite A
Modesto, CA 95351
Tel: 209.572.7399 Fax: 209.236.1579
www.nexusengineering.net
HVAC , Plumbing/Piping , Fire Sprinklers
Process/Plant Engineering , Refrigeration

12/2020 Jobs\20140 - Lathrop Fire Station\20140 - Mechanical.dwg, 12/9/2020 2:24:45 PM, DWG To PDF.pc3

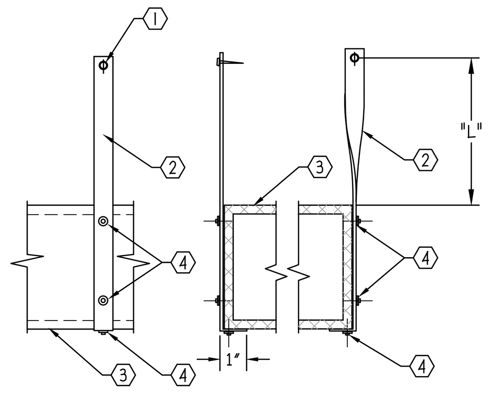

1. UPPER ATTACHMENT - SEE HVAC DUCT CONSTRUCTION STANDARDS - METAL AND FLEXIBLE, THIRD EDITION, SMACNA - 2006, FIGURES 5-2, 5-3 AND 5-4. PROVIDE FRAMING, BLOCKING OR STRUCTURAL MEMBER AS MAY BE REQUIRE, COORDINATE STRUCTURAL COMPONENTS WITH STRUCTURAL PLANS OR STRUCTURAL ENGINEER OF RECORD.
2. DUCT SUPPORT STRAP, WIRE OR ROD SEE TABLE BELOW FOR DETAILS.
3. GALV. SHEET METAL DUCT W/ ACOUSTIC LINING, SEE MECHANICAL PLANS FOR SIZES.
4. #10 x 3/4" SELF-TAPPING CADMIUM PLATED SHEET METAL SCREWS TO ANCHOR STRAPS TO DUCT. ALL STRAPS TO BE TIGHT AGAINST DUCT AND SUPPORT MEMBERS.

NOTES:
1. DUCTWORK SHALL CONFORM WITH, HVAC DUCT CONSTRUCTION STANDARDS - METAL AND FLEXIBLE, THIRD EDITION, SMACNA - 2006.
2. HANGER SHALL BE POSITIVELY ATTACHED TO THE DUCT WITHIN 2" OF THE TOP OF THE DUCT WITH A MINIMUM OF TWO #10 SHEET METAL SCREWS EACH SIDE AND #10 SHEET METAL SCREW ON THE BOTTOM OF DUCT WITHIN 1" OF EACH SIDE.
3. DUCT WITH A CROSS-SECTIONAL AREA EQUAL TO OR GREATER THAN 6 SQUARE FEET, AND "L" GREATER THAN 12" REQUIRE SEISMIC BRACING.

TABLE 5-1 RECTANGLE DUCT HANGERS MINIMUM SIZE

MAXIMUM HALF OF DUCT PERIMETER	PAIR @ 10'-0" SPACING		PAIR @ 8'-0" SPACING		PAIR @ 5'-0" SPACING		PAIR @ 4'-0" SPACING	
	STRAP	WIRE/ROD	STRAP	WIRE/ROD	STRAP	WIRE/ROD	STRAP	WIRE/ROD
P/2 = 30"	1"x0.030" (22 GA)	10 GA	1"x0.030" (22 GA)	10 GA	1"x0.030" (22 GA)	12 GA	1"x0.030" (22 GA)	12 GA
P/2 = 72"	1"x0.047" (18 GA)	3/8"	1"x0.036" (20 GA)	1/4"	1"x0.030" (22 GA)	1/4"	1"x0.030" (22 GA)	1/4"
P/2 = 96"	1"x0.058" (16 GA)	3/8"	1"x0.047" (18 GA)	3/8"	1"x0.036" (20 GA)	3/8"	1"x0.030" (22 GA)	1/4"
P/2 = 120"	1½"x0.058" (16 GA)	1/2"	1"x0.058" (16 GA)	3/8"	1"x0.047" (18 GA)	3/8"	1"x0.036" (20 GA)	1/4"
P/2 = 168"	1½"x0.058" (16 GA)	1/2"	1½"x0.058" (16 GA)	1/2"	1"x0.058" (16 GA)	3/8"	1"x0.047" (18 GA)	3/8"
P/2 = 192"	-	1/2"	1½"x0.058" (16 GA)	1/2"	1"x0.058" (16 GA)	3/8"	1"x0.058" (16 GA)	3/8"
P/2 ≥ 193"	SPECIAL ANALYSIS REQUIRED							

WHEN STRAPS ARE LAP-JOINED, USE THESE MINIMUM FASTENERS:
1"x0.047", 0.036" 0.030" - TWO NO. 10 OR ONE 1/4" BOLT
1"x0.058" - TWO 1/4" BOLT
1½"x0.058" - TWO 3/8" BOLT
PLACE FASTENERS IN SERIES, NOT SIDE-BY-SIDE.

SINGLE HANGER MAXIMUM ALLOWABLE LOAD:

STRAP	WIRE OR ROD (DIA.)
1"x0.030" - 260 LBS	0.106" - 80 LBS
1"x0.036" - 320 LBS	0.135" - 120 LBS
1"x0.047" - 420 LBS	0.162" - 160 LBS
1"x0.058" - 700 LBS	1/4" - 270 LBS
1½"x0.058" - 1100 LBS	3/8" - 680 LBS
	1/2" - 1250 LBS
	5/8" - 2000 LBS
	3/4" - 3000 LBS

NOTES:
1. DIMENSIONS OTHER THAN GAGE ARE IN INCHES.
2. TABLES ALLOW FOR DUCT WEIGHT 1 LB./SF INSULATION WEIGHT NORMAL REINFORCEMENT AND TRAPEZE WEIGHT BUT NO EXTERNAL LOADS.
3. STRAPS ARE GALVANIZED STEEL; OTHER MATERIALS ARE UNCOATED STEEL.
4. ALLOWABLE LOADS FOR P/2 ASSUME THAT DUCTS ARE 0.058" (16 GA) MAXIMUM, EXCEPT THAT WHEN MAXIMUM DUCT DIMENSION (W) IS OVER 60", THEN P/2 MAXIMUM IS 1.25W.
5. FOR TRAPEZE SIZES SEE, HVAC DUCT CONSTRUCTION STANDARDS - METAL AND FLEXIBLE, THIRD EDITION, SMACNA - 2006, TABLE 5-3 ALLOWABLE LOADS IN POUNDS FOR TRAPEZE BARS AND FIGURE 5-6 TRAPEZE LOAD DIAGRAM.
6. 12 GA, 10 GA OR 8 GA WIRE IS STEEL OF BLACK-ANNEALED, BRIGHT BASIC OR GALVANIZED TYPE.
7. CABLE HANGING SYSTEMS WITH ADJUSTABLE MECHANICAL DEVICE.

1 (M4.00) DUCT HANGER DETAIL
SCALE: NONE

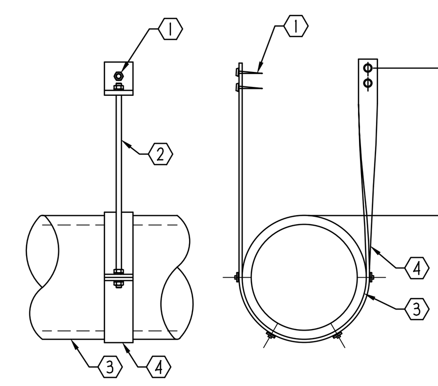

1. UPPER ATTACHMENT - SEE HVAC DUCT CONSTRUCTION STANDARDS - METAL AND FLEXIBLE, THIRD EDITION, SMACNA - 2006, FIGURES 5-2, 5-3 AND 5-4. PROVIDE FRAMING, BLOCKING OR STRUCTURAL MEMBER AS MAY BE REQUIRE,COORDINATE STRUCTURAL COMPONENTS WITH STRUCTURAL PLANS OR STRUCTURAL ENGINEER OF RECORD.
2. HANGER ROD SEE TABLE, FOR SIZE SEE TABLE.
3. GALV. SHEET METAL DUCT W/ ACOUSTIC LINING, SHEET METAL DUCT W/ EXTERNAL INSULATION OR VENT, SEE PLANS FOR SIZE.
4. STRAP, SEE TABLE FOR SIZE.

NOTES:
1. DUCTWORK SHALL CONFORM WITH, HVAC DUCT CONSTRUCTION STANDARDS - METAL AND FLEXIBLE, THIRD EDITION, SMACNA - 2006.
2. DUCT WITH A CROSS-SECTIONAL AREA EQUAL TO OR GREATER THAN 6 SQUARE FEET, AND "L" GREATER THAN 12" REQUIRE SEISMIC BRACING.

TABLE 5-2 MINIMUM HANGER SIZES FOR ROUND DUCT

DUCT DIAMETER	MAXIMUM SPACING	ROD DIAMETER	STRAP
≥ 10"	12'	1/4"	1" x 0.030" (22 GA.)
11" TO 18"	12'	1/4"	1" x 0.030" (22 GA.)
19" TO 24"	12'	1/4"	1" x 0.030" (22 GA.)
25" TO1 36"	12'	3/8"	1" x 0.036" (20 GA.)
37" TO 50"	12'	2 @ 3/8"	2 @ 1" x 0.036" (20 GA.)
51" TO 80"	12'	2 @ 3/8"	2 @ 1" x 0.037" (18 GA.)
81" TO 94"	12'	2 @ 3/8"	2 @ 1" x 0.058" (16 GA.)

NOTES:
1. STRAPS ARE GALVANIZED STEEL; RODS ARE UNCOATED OR GALVANIZED STEEL; WIRE IS BLACK ANNEALED, BRIGHT BASIC OR GALVANIZED STEEL. ALL ARE ALTERNATIVES.
2. TABLE ALLOWS FOR CONVENTIONAL WALL THICKNESS, AND JOINT SYSTEMS PLUS 1 LB./SF INSULATION WEIGHT. IF HEAVIER DUCTS ARE TO BE INSTALLED, ADJUST HANGER SIZES TO BE WITHIN THEIR LOAD LIMITS; SEE ALLOWABLE LOAD LIMITS WITH TABLE 5-1. HANGER SPACING MAY BE ADJUSTED BY SPECIAL ANALYSIS.
3. FOR INDUSTRIAL GRADE SUPPORTS, INCLUDING SADDLES, SINGLE POINT TRAPEZE LOADS, LONGER SPANS AND FLANGED JOINT LOADS, SEE SMACNA'S ROUND INDUSTRIAL DUCT CONSTRUCTION STANDARDS.

2 (M4.00) ROUND DUCT HANGER DETAIL
SCALE: NONE

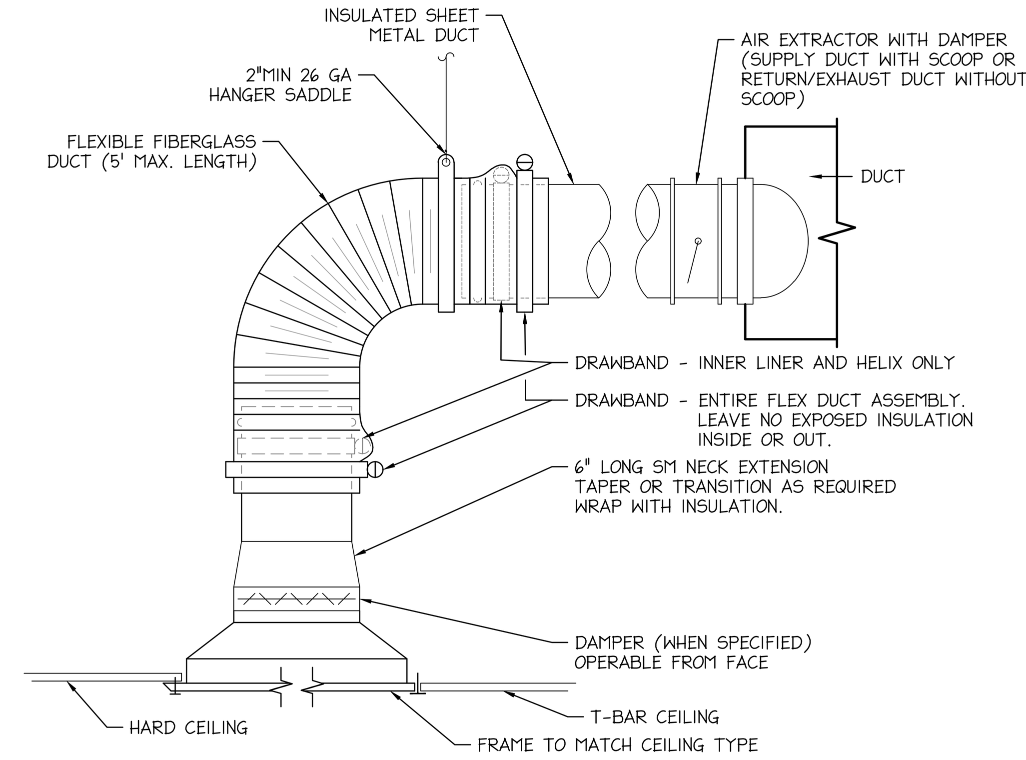

FLEXIBLE DUCT NOTES:
1. FLEXIBLE DUCTS SHALL CONSIST OF AN EXTERIOR REINFORCED LAMINATED VAPOR BARRIER, FIBER GLASS INSULATION (PER CEC STANDARDS), ENCAPSULATED SPRING STEEL WIRE HELIX AND IMPERVIOUS, SMOOTH, NON-PERFORATED INTERIOR VINYL LINER. INDIVIDUAL LENGTH OF FLEXIBLE DUCT SHALL CONTAIN FACTORY FABRICATED STEEL CONNECTION COLLARS.
2. FLEXIBLE DUCTS SHALL BE SUPPORTED AT OR NEAR MID-LENGTH WITH 2" WIDE 28 GA. STEEL HANGER COLLAR ATTACHED TO THE STRUCTURE WITH AN APPROVED DUCT HANGER. INSTALLATION SHALL MINIMIZE SHARP RADIUS TURNS OR OFFSETS. THE MAXIMUM LENGTH WILL BE FIVE (5) FEET AND CAN BE USED AT THE TERMINAL ENDS ONLY, AND SHALL NOT BE USED IN LIEU OF RIGID ELBOWS OR FITTINGS. EXCEPT THAT FLEXIBLE DUCTS PROPERLY INSTALLED MAY BE USED TO CROSS SEISMIC JOINTS WITHOUT OFFSETS.

3 (M4.00) TYPICAL REGISTER DETAIL
SCALE: NONE

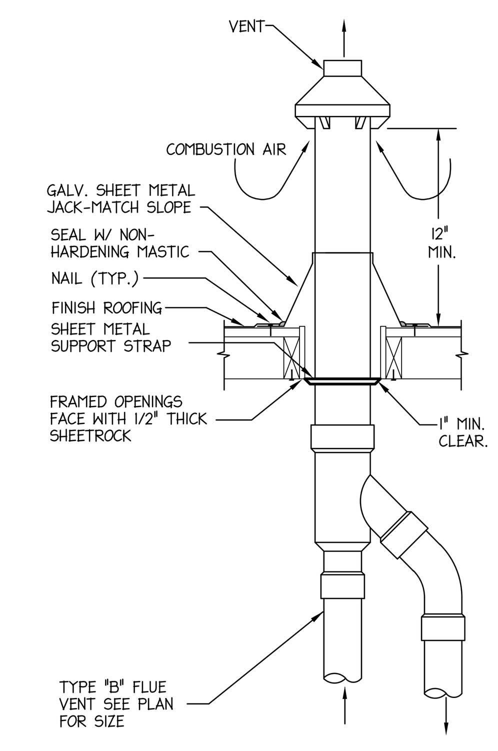

4 (M4.00) FLUE THROUGH ROOF DETAIL
SCALE: NONE

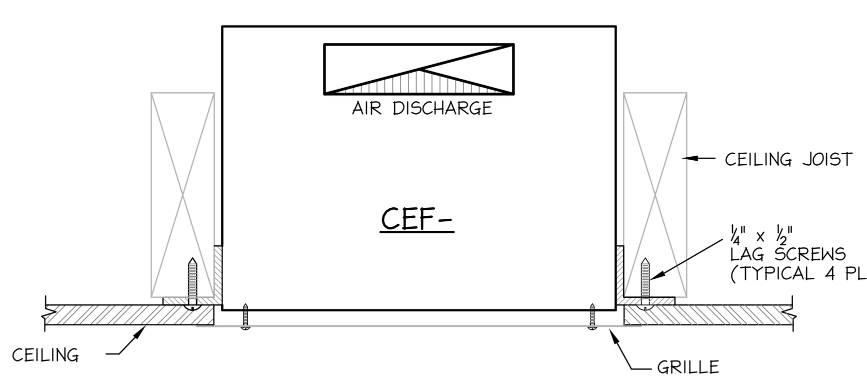

5 (M4.00) CEILING EXHAUST FAN DETAIL
SCALE: NONE

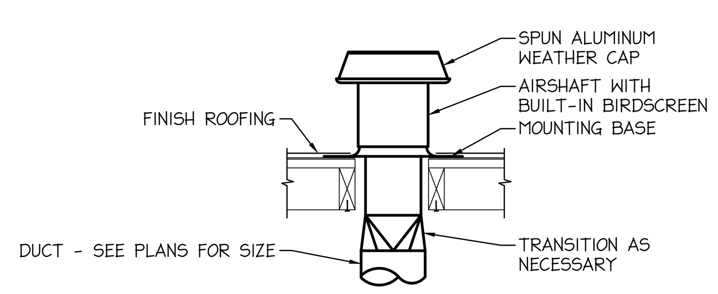

6 (M4.00) ROOF CAP DETAIL
SCALE: NONE

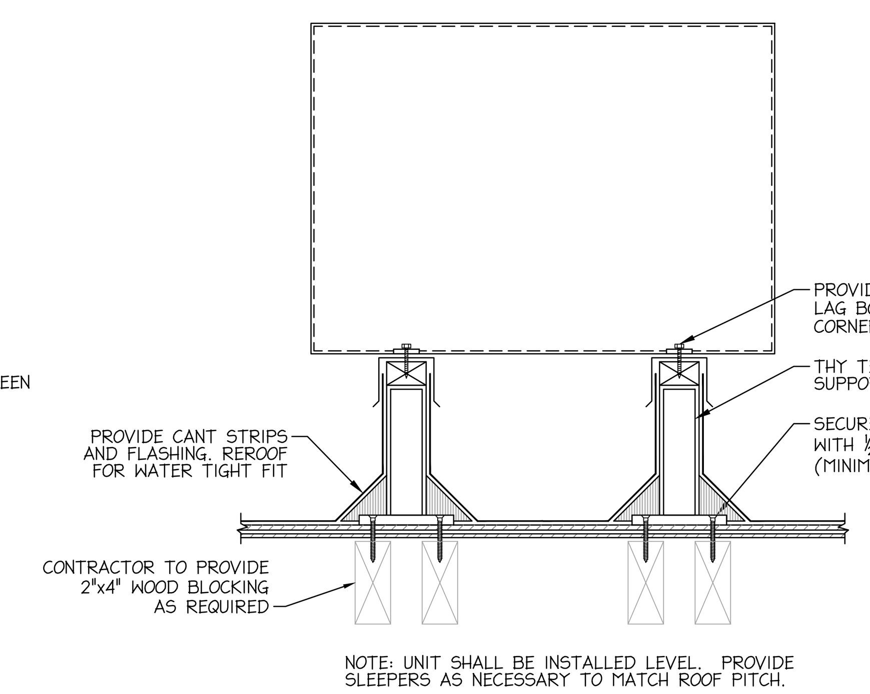

NOTE: UNIT SHALL BE INSTALLED LEVEL. PROVIDE SLEEPERS AS NECESSARY TO MATCH ROOF PITCH.

7 (M4.00) CONDENSING UNIT CU-2 MOUNTING DETAIL
SCALE: NONE

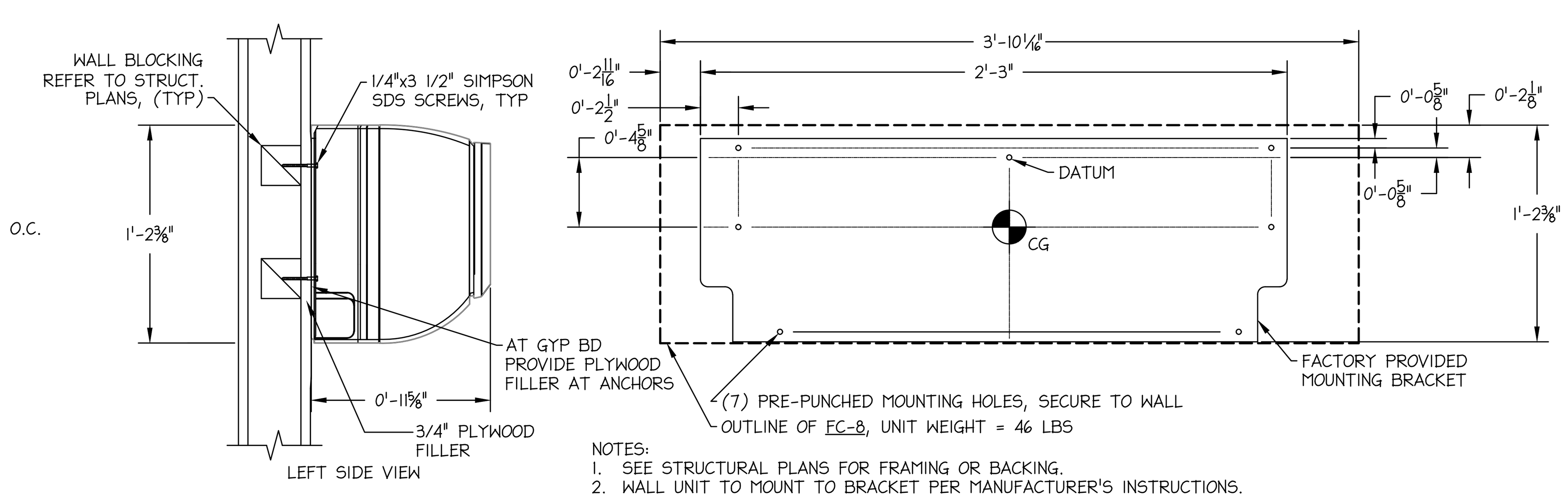

NOTES:
1. SEE STRUCTURAL PLANS FOR FRAMING OR BACKING.
2. WALL UNIT TO MOUNT TO BRACKET PER MANUFACTURER'S INSTRUCTIONS.

8 (M4.00) DUCTLESS SPLIT FC-8 MOUNTING DETAIL
SCALE: NONE

LDA
DESIGNERS & ARCHITECTS

Architect:
LDA Partners, LLP
Designers & Architects
222 Central Court
Stockton, CA 95204
209.943.0405
www.ldapartners.com

LICENSED ARCHITECT ERIC WILLIAM WOHLE C28388 September 2021 STATE OF CALIFORNIA

Client:
LATHROP-MANTECA FIRE PROTECTION DISTRICT
19001 SOMERSTON PARKWAY
LATHROP, CA 95330
209.941.5102

Project:
FIRE STATION 31 UPGRADES

800 J STREET
LATHROP CA 95330

Project No.: ###-#-##
Drawn By: DW
Checked By: GL

No.	Description	Date	By
1	PLAN CHECK #1 1ST REVIEW CYCLE	10-21-2020	
2	PLAN CHECK #2 ADDENDA 1	12-09-2020	

3RD SUBMITTAL - BLDG. DEPT.
12/09/2020

MECHANICAL - DETAILS

REGISTERED PROFESSIONAL ENGINEER ALLEN LAXMAN M30029 JUNE 30, 2022 MECHANICAL STATE OF CALIFORNIA

neXus engineering
Consulting Mechanical Engineers
1400 Lone Palm Ave, Suite A
Modesto, CA 95351
Tel: 209.572.7399 Fax: 209.236.1579
www.nexusengineering.net
HVAC . Plumbing/Piping . Fire Sprinklers
Process/Plant Engineering . Refrigeration

M4.00

J:\2020 Jobs\20140 - Lathrop Fire Station\20140 - Mechanical.dwg, 12/9/2020 2:24:46 PM, DWG To PDF.pc3

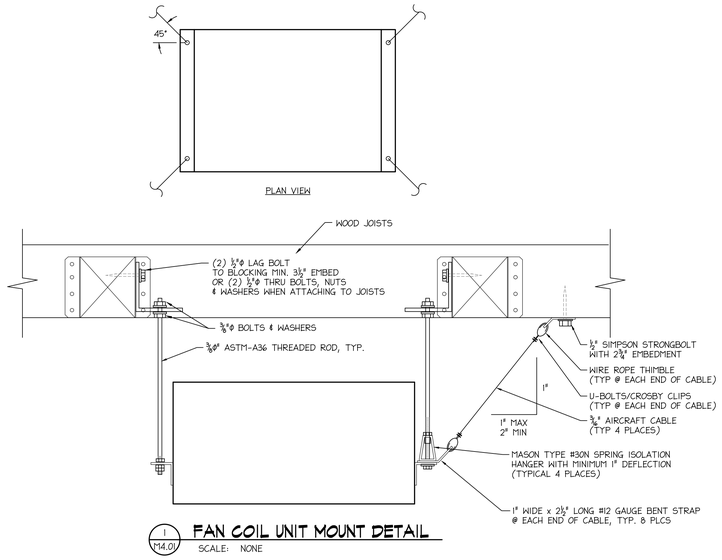

1 / M4.01 **FAN COIL UNIT MOUNT DETAIL**
SCALE: NONE

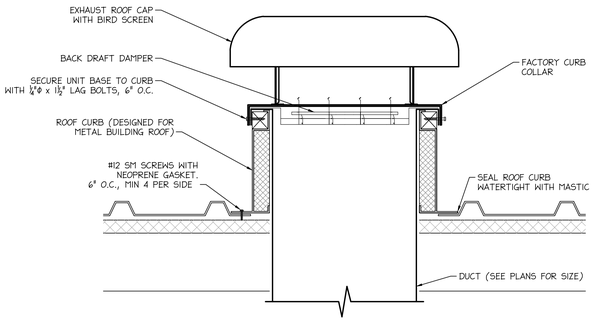

3 / M4.01 **ROOF EXHAUST CAP DETAIL**
SCALE: NONE

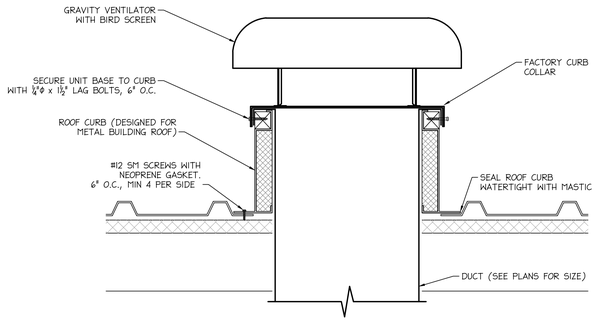

4 / M4.01 **GRAVITY VENTILATOR DETAIL**
SCALE: NONE

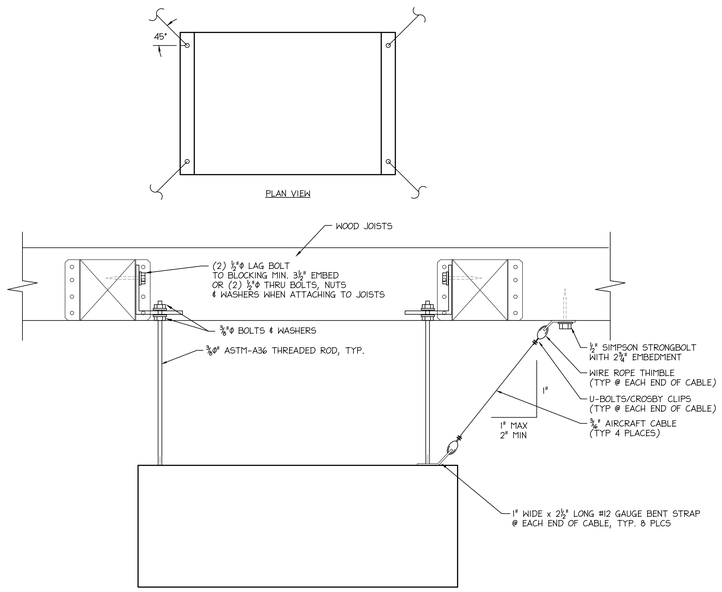

2 / M4.01 **UNIT HEATER MOUNT DETAIL**
SCALE: NONE

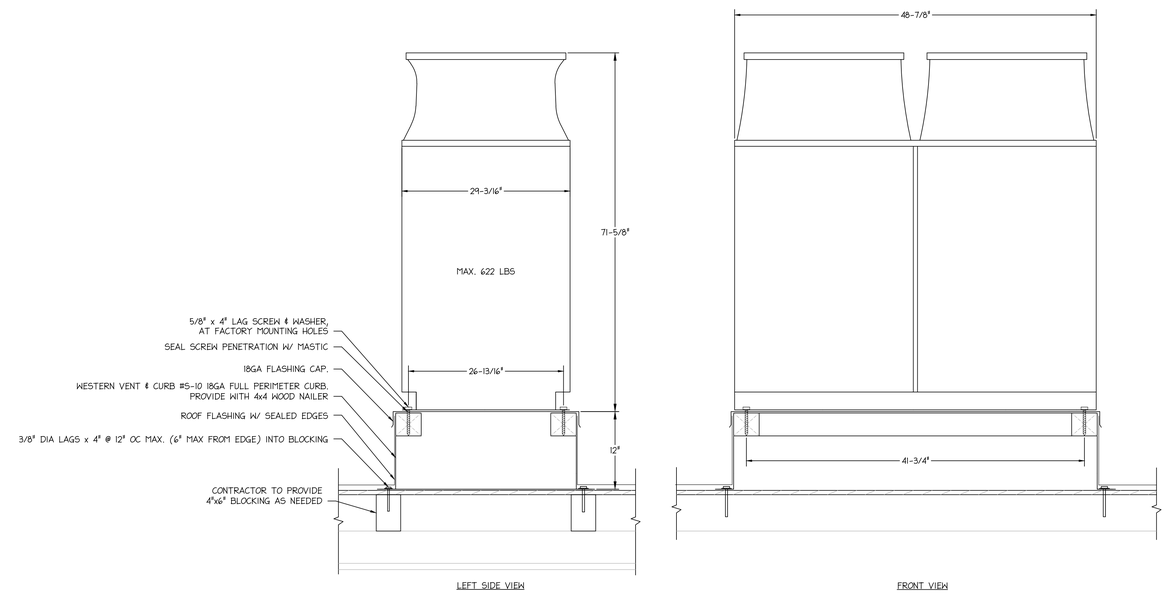

5 / M4.01 **HEAT PUMP CU-1 MOUNTING DETAIL**
SCALE: NONE

LDA
DESIGNERS & ARCHITECTS

Architect:
LDA Partners, LLP
Designers & Architects
222 Central Court
Stockton, CA 95204
209.943.0405
www.ldapartners.com

LICENSED ARCHITECT
ERIC WILLIAM WHITE
C28388
September 2021
STATE OF CALIFORNIA

Client:
LATHROP-MANTECA FIRE
PROTECTION DISTRICT
19001 SOMERSTON PARKWAY
LATHROP, CA 95330
209.941.5102

Project:
FIRE STATION 31 UPGRADES

800 J STREET
LATHROP CA 95330

Project No.: ###-#-##
Drawn By: DW
Checked By: GL

No.	Description	Date	By
1	PLAN CHECK #1 1ST REVIEW CYCLE	10-21-2020	
2	PLAN CHECK #2 ADDENDA 1	12-09-2020	

3RD SUBMITTAL - BLDG. DEPT.
12/09/2020

MECHANICAL - DETAILS

REGISTERED PROFESSIONAL ENGINEER
JEN LAMB
No. 31028
MECHANICAL
STATE OF CALIFORNIA

neXus engineering
Consulting Mechanical Engineers
1400 Lone Palm Ave, Suite A
Modesto, CA 95351
Tel: 209.572.7399 Fax: 209.236.1579
www.nexusengineering.net
HVAC . Plumbing/Piping . Fire Sprinklers
Process/Plant Engineering . Refrigeration

M4.01

J:\2020 Jobs\20140 - Lathrop Fire Station\20140 - Mechanical.dwg, 12/9/2020 2:24:47 PM, DWG To PDF.pc3

DIAGRAM SYMBOL LEGEND	
DISPLAY	DESCRIPTION
—///—	POWER WIRE
———	CONTROL WIRE
— — —	REF. PIPE

CONT.No		PAGE	

CITY MULTI

SYSTEM SCHEMATIC DWG.

Additional refrigerant charge is needed depending on the size and length of extended piping. Please refer the amount of pre-charge and the formula of calculation which is mentioned on the data book.
1.25mm²(16 AWG) : 1.25mm²(16 AWG) or more. 0.75mm²(20 AWG) : between 0.5mm²(24 AWG) and 0.75mm²(20 AWG).

PIPING AND CONTROLS		
SYMBOL	LIQUID PIPE/GAS PIPE SIZE	
P1	1/4	/ 1/2
P2	3/8	/ 5/8
P3		/ 3/4 / 1-1/8
SYMBOL	MODEL NUMBER	
MA	TAR-CT01MAU-SB	

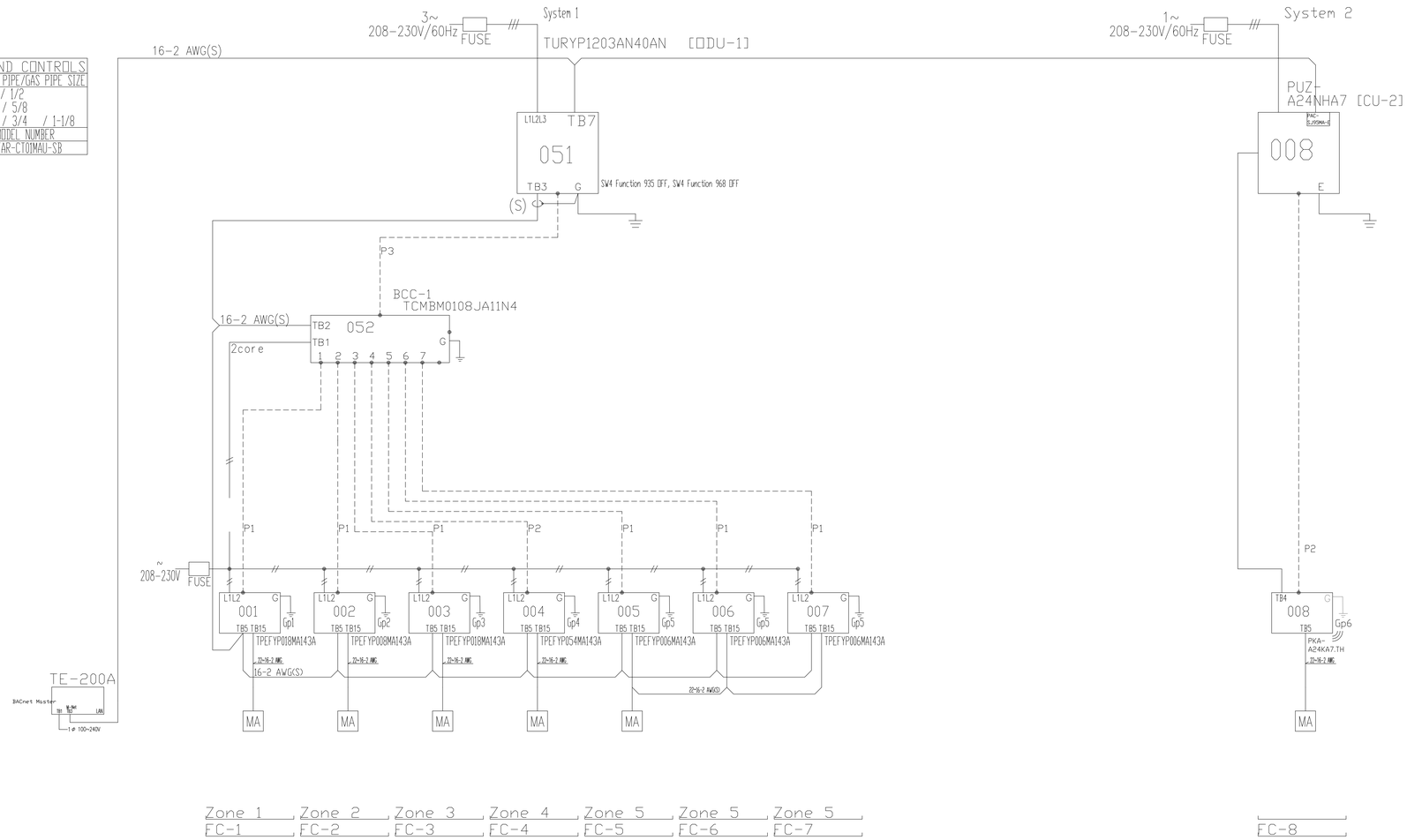

1 / M4.02 **PIPING / WIRING DIAGRAM**
SCALE: NONE

LDA
DESIGNERS & ARCHITECTS

Architect:
LDA Partners, LLP
Designers & Architects
222 Central Court
Stockton, CA 95204
209.943.0405
www.ldapartners.com

LICENSED ARCHITECT
ERIC WILLIAM NOHLE
C28388
September 2021
STATE OF CALIFORNIA

Client:
LATHROP-MANTECA FIRE PROTECTION DISTRICT
19001 SOMERSTON PARKWAY
LATHROP, CA 95330
209.941.5102

Project:
FIRE STATION 31 UPGRADES

800 J STREET
LATHROP CA 95330

Project No.: ###-#-##
Drawn By: DW
Checked By: GL

No.	Description	Date	By
1	PLAN CHECK #1 1ST REVIEW CYCLE	10-21-2020	
2	PLAN CHECK #2 ADDENDA 1	12-09-2020	

3RD SUBMITTAL - BLDG. DEPT.
12/09/2020

MECHANICAL - DETAILS

REGISTERED PROFESSIONAL ENGINEER
LEN LAVAY
MECHANICAL
STATE OF CALIFORNIA

neXus engineering
Consulting Mechanical Engineers
1400 Lone Palm Ave, Suite A
Modesto, CA 95351
Tel: 209.572.7399 Fax: 209.236.1579
www.nexusengineering.net
HVAC . Plumbing/Piping . Fire Sprinklers
Process/Plant Engineering . Refrigeration

M4.02

J:\2020 Jobs\20140 - Lathrop Fire Station\20140 - Mechanical.dwg, 12/9/2020 2:24:47 PM, DWG To PDF.pc3

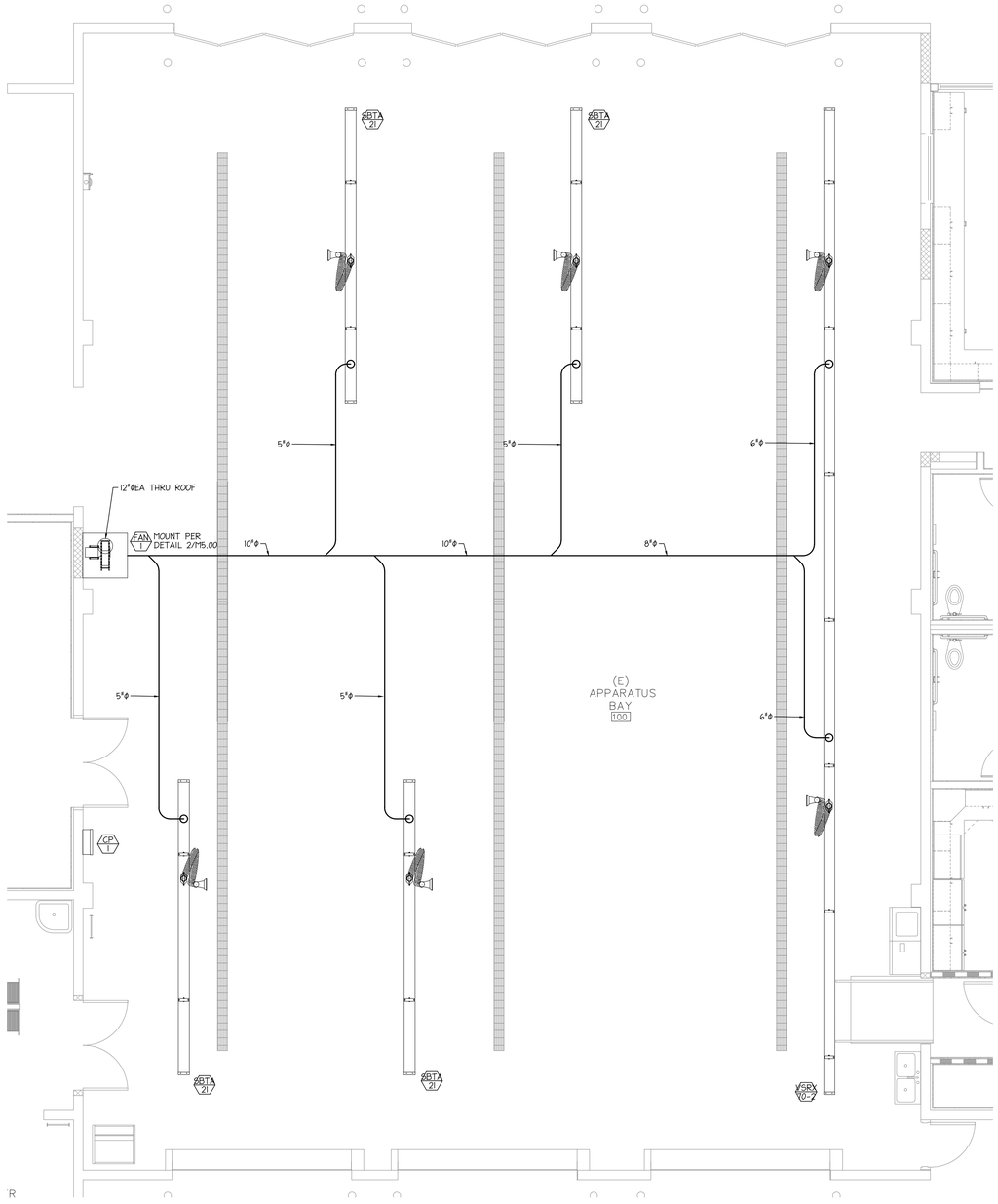

1 M5.00 MECHANICAL - VEHICLE EXHAUST REMOVAL SYSTEM LAYOUT

SCALE: 1/4" = 1'-0"

NORTH

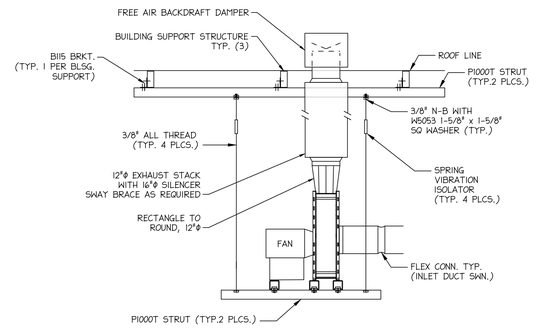

2 M5.00 PLYMOVENT FAN MOUNT DETAIL

SCALE: NONE

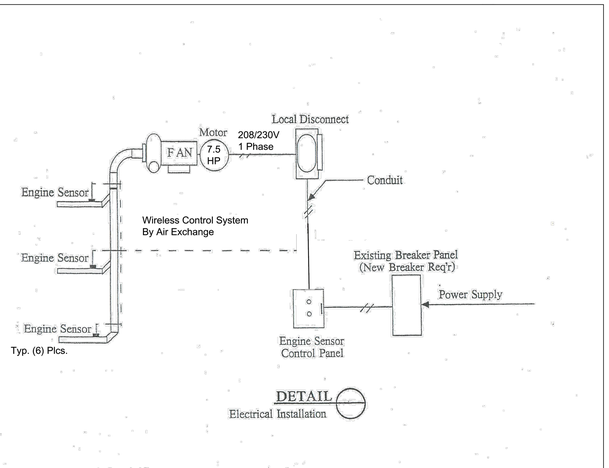

DETAIL Electrical Installation

VEHICLE EXHAUST REMOVAL SYSTEM SCHEDULE

MK NO	MANUFACTURER & MODEL #	DESCRIPTION	SUPPORTS	WEIGHT (LBS)	REMARKS
SBTA 21	PLYMOVENT SBTA-21	SBTA TRACK SYSTEM, BACK-IN, 19' LONG, 6' UNDER DOOR HEIGHT	2	150	SEE NOTE 1
VSRX 70-2	PLYMOVENT VSRX 70-2	VSRA RAIL SYSTEM, DRIVE THRU, 66.5' LONG MAX, 6' UNDER DOOR HEIGHT	7	629	SEE NOTE 1
CP-1	PLYMOVENT 05-3	CONTROL PANEL, 48" AFF	N/A	N/A	SEE NOTE 1
FAN-1	PLYMOVENT TEV-585	7.5HP/208-230V/1PH FAN	1	185	SEE NOTE 1,2

NOTES:
1. DRAWINGS ARE DIAGRAMMATICAL. IT SHALL BE THE VEHICLE EXHAUST SYSTEM SPECIALIST'S OPTION TO MODIFY LOCATIONS, ELEVATIONS AND DETAILS AT THE PROPOSED POINTS OF CONNECTION AND IN AREAS OF POSSIBLE CONFLICT.
2. EXHAUST TERMINATION 36" ABOVE ROOF PER 2019 CMC 502.2.2.

AIR EXCHANGE powered by PLYMOVENT

Lathrop Manteca 31
800 J Street
Lathrop, CA 95330

ISSUE:	DATE:	DESCRIPTION:
A	06/26/20	Plymovent Vehicle Exhaust System

DRAWN BY: Bob Tredinnick

REVIEWED BY:

APPROVED BY: Chris Koss

AE PROJECT :

AIR EXCHANGE, INC.

495 Edison Ct., Suite A
Fairfield, Ca 94534
1494-B East Francis St.
Ontario, CA 91761

PH:800-300-2945
FX:707-864-2705
INFO@AIREXCHANGE.COM
WWW.AIREXCHANGE.COM

LDA DESIGNERS & ARCHITECTS

Architect:
LDA Partners, LLP
Designers & Architects
222 Central Court
Stockton, CA 95204
209.943.0405
www.ldapartners.com

LICENSED ARCHITECT ERIC WILLIAM MOORE C28388 September 2021 STATE OF CALIFORNIA

Client:
LATHROP-MANTECA FIRE PROTECTION DISTRICT
19001 SOMERSTON PARKWAY
LATHROP, CA 95330
209.941.5102

Project:
FIRE STATION 31 UPGRADES

800 J STREET
LATHROP CA 95330

Project No.: ###-#-##
Drawn By: DW
Checked By: GL

No.	Description	Date	By
1	PLAN CHECK #1 1ST REVIEW CYCLE	10-21-2020	
2	PLAN CHECK #2 ADDENDA 1	12-09-2020	

3RD SUBMITTAL - BLDG. DEPT. 12/09/2020

MECHANICAL - PLYMOVENT LAYOUT, DETAILS, & SCHEDULE

LICENSED PROFESSIONAL ENGINEER STEVEN LAWRENCE GLOVER 15012 MECHANICAL STATE OF CALIFORNIA

neXus engineering
Consulting Mechanical Engineers
1400 Lone Palm Ave, Suite A
Modesto, CA 95351
Tel: 209.572.7399 Fax: 209.236.1579
www.nexusengineering.net
HVAC . Plumbing/Piping . Fire Sprinklers
Process/Plant Engineering . Refrigeration

M5.00

J:\2020 Jobs\20140 - Lathrop Fire Station\20140 - Mechanical.dwg, 12/9/2020 2:24:49 PM, DWG To PDF.pc3

SBTA SYSTEM OVERVIEW PROCEDURE

DATE: 8-28-95 | DIVISION: Fire systems | TAB: 2 - A | APPROVED BY: Wayne Lutz

1. SBTA - TRACK - 3 1/8 " hgh by 1 1/2 " wide and 1/8 " thick extruded aluminum alloy(AA 06063). Profile type SAPA 6063 HIP (PART # 516302 - 20).
2. DUCT CONNECTION - Location riser bracket meets 4" dia. yellow & black flex ducting. Riser bracket is located by calculating the tailpipe distance(vehicle rest position) to the door threshold, then divide that distance by 2 and then add 2 - 4 feet (depends on track height) to measurement back toward vehicle tailpipe.
3. TRACK HEIGHT - Height of the SBTA-track is determined by 3 Things:
   1. Door Height - Retraction of bay door won't allow track/ rail to be positioned higher then door.
   2. Tailpipe distance - Tailpipes close to exiting door (less then 20 ft). Tailpipe distances over 30 ft affect track height.
   3. Speed of the vehicle - Dictated by SOP's governing fire department.

Note: Typical track location is 12' high by 7' from door and 20 - 24 " off side of vehicle.

4. HOSE LOOP - Ideally above the top profile of vehicle.Allows the fire personel to move around freely.

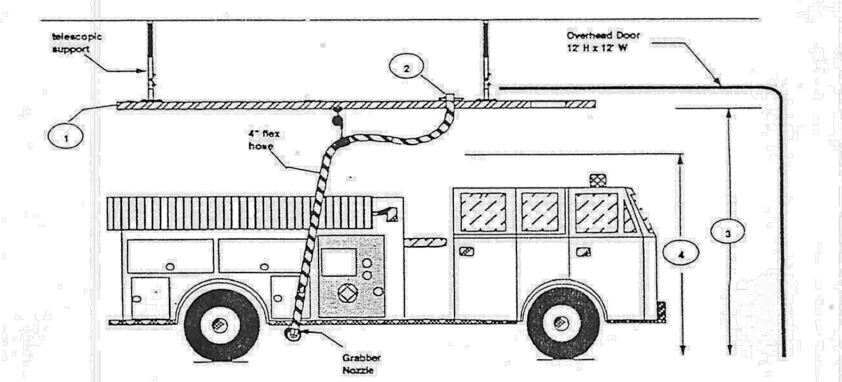

PLYMOVENT Vehicle Exhaust Ventilation Apparatus | Plymovent Corporation 375 Raritan Center Pkwy Edison, NJ 08837 Phone: 908-417-0808 Fax: 908-417-1818 | This drawing has been copyrighted and is the property of Plymovent Corp of Edison, NJ and shall not be disclosed without written consent to any 3rd party.

SBTA SUPPORT LOCATION PROCEDURE

DATE: 8-28-95 | DIVISION: Fire Systems | TAB: 2 - E | APPROVED BY: Wayne Lutz

1. FRONT SUPPORT - The front support must be located prior to back supports on the track system. The bay door is the reference point for the exact location of the first leg. Raise the bay door to the full up position and measure back 2" from the back edge of the door stop. When door height is 12' then first leg is approximately 12' -2 " back from the door threshold.

   Exceptions: Roll-up doors, folding doors, and doors that are 11' wide or less.

2. BACK SUPPORT - The back support shall be no more than 12 ft apart.

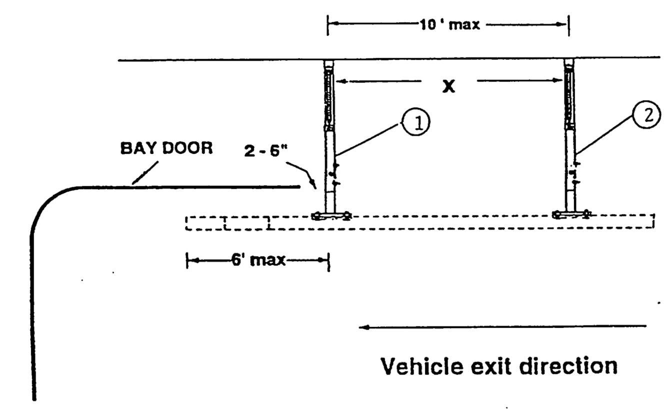

PLYMOVENT Vehicle Exhaust Ventilation Apparatus | Plymovent Corporation 375 Raritan Center Pkwy Edison, NJ 08837 Phone: 908-417-0808 Fax: 908-417-1818 | This drawing has been copyrighted and is the property of Plymovent Corp of Edison, NJ and shall not be disclosed without written consent to any 3rd party.

SBTA RISER BRACKET LOCATION PROCEDURE

DATE: 8-28-95 | DIVISION: Fire systems | TAB: 2 - F | APPROVED BY: Wayne Lutz

1. TAILPIPE - Locate SBTA-track on the side of exhaust pipe termination.

   Note: Insure that station house has informed Plymovent team of any vehicles using the same bays.

2. BAY DOOR - The entering and exiting door for fire apparatus. This is our hook-up and release point for the SBTA-system
3. DISTANCE TO DOOR - Distance measured from tailpipe to exiting door when fire apparatus is in parked position. Make sure that vehicle is parked consistently.

   Note: Chocking back wheel or marking wall for driver is a good preventative of inconsistent park locations.

4. SBTA - TRACK - 20' track located 20" - 24" off side of vehicle and 6 - 8' from the exiting door.
5. RISER BRACKET - The bracket that connects the spiral hard ducting to the SBTA-track. For Back-in applications calculate the distance from tailpipe to door and divide distance in half then slide riser back 2' - 4' toward tailpipe.

   Note: The riser bracket must stay a minimum of 6 feet from end stop.

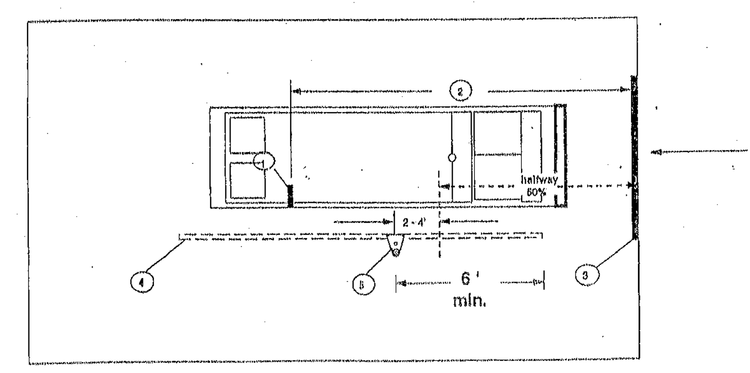

PLYMOVENT Vehicle Exhaust Ventilation Apparatus | Plymovent Corporation 375 Raritan Center Pkwy Edison, NJ 08837 Phone: 908-417-0808 Fax: 908-417-1818 | This drawing has been copyrighted and is the property of Plymovent Corp of Edison, NJ and shall not be disclosed without written consent to any 3rd party.

SBTA REGULATOR ATTACHMENT PROCEDURE

DATE: 8-28-95 | DIVISION: Fire systems | TAB: 8 - B | APPROVED BY: Wayne Lutz

1. TRACK - 3 3/16 " high by 1 1/2 " wide extruded aluminum 1/8 " thick boxloc construction.
2. RISER BRACKET - 8 1/2" wide by 12 " long riser bracket for connecting hard ductwork to 4 " diameter flex hose. Riser bracket will have 1 1/4 " dia opening punched in the middle designed for gauge attachment. (2) 1/4" dia holes will be predrilled for attaching regulator to riser bracket.
3. REGULATOR - Attachs to the riser bracket with 6mm O D fitting the outlet side and 8 mm O D branch tee type fitting on the inlet. Regulator airflow arrow points to the duct connection.
4. UNCOUPLING VALVE - Valve mounted in front of riser bracket toward exiting door. Uncoupling valve has a 6 mm O D push in fitting on top side and 8mm O D push in fitting on the bottom of valve.
5. UNREGULATED AIR - The longer clear teflon 6mm O D tubing passes through duct spool via preattached rubber grommit and runs around regulator to the 6 mm O D push in fitting on the uncoupling valve. Plymovent will supply the longer tubing in the hose drop.
6. REGULATED AIR - The shorter clear 6 mm O D tubing passes through duct spool via preattached rubber grommit and directly attaches to the outlet of the regulator.
7. BLACK TUBING - 8 mm O D black nylon tubing attached to compressor will connect to regulator and uncoupling valve via the branch tee located on the back of regulator.

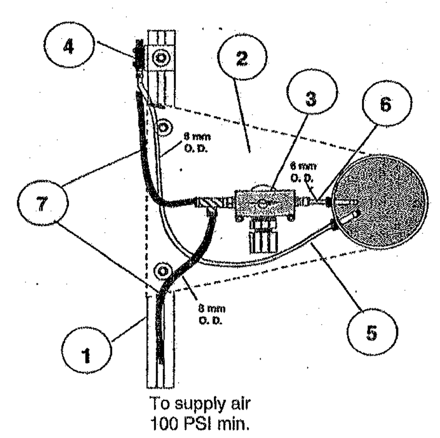

PLYMOVENT Vehicle Exhaust Ventilation Apparatus | Plymovent Corporation 375 Raritan Center Pkwy Edison, NJ 08837 Phone: 908-417-0808 Fax: 908-417-1818 | This drawing has been copyrighted and is the property of Plymovent Corp of Edison, NJ and shall not be disclosed without written consent to any 3rd party.

UNCOUPLING VALVE LOCATION PROCEDURE

DATE: 8-28-95 | DIVISION: Fire Systems | TAB: 3 - A | APPROVED: Wayne Lutz

1. VALVE LOCATION - The uncoupling valve should be located on the vehicle-side of sliding balancer track approximately 6 feet from end of track for the standard SBTA - 21 system. The factors that effect the precise location of the uncoupling valve are:

   (1) Speed of vehicle - move back toward vehicle tailpipe in 1 foot increments if speed is faster then normal.
   (2) Tailpipe distance - The run distance is critical in determining the proper location of valve. Move back from standard position (6 ' end of track) 1 foot for every 5 foot of distance back.

   Note : The only exception to locating valve on truck - side is the (2) vehicle drive thru senario.

2. VALVE TRIGGER - The valve trigger must always be pointing to the door in order to engage the uncoupling valve when vehicle exits apparatus bay.
3. RELEASE GAP - The valve trigger, when engaged, should slightly touch the bottom of the valve body .
4. TROLLEY - The trolley trip plate must engage the uncoupling valve.

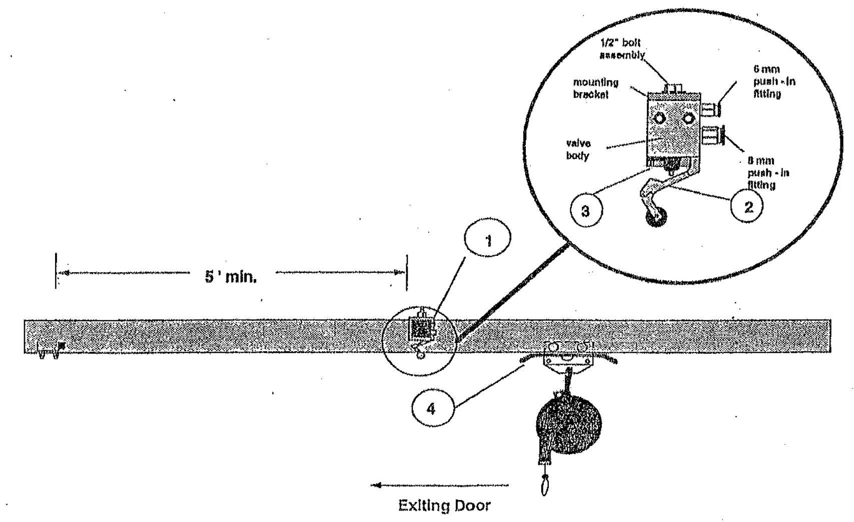

PLYMOVENT Vehicle Exhaust Ventilation Apparatus | Plymovent Corporation 375 Raritan Center Pkwy Edison, NJ 08837 Phone: 908-417-0808 Fax: 908-417-1818 | This drawing has been copyrighted and is the property of Plymovent Corp of Edison, NJ and shall not be disclosed without written consent to any 3rd party.

SBTA END STOP ATTACHMENT PROCEDURE

DATE: 8-28-95 | DIVISION: Fire Systems | TAB: 2 - I | APPROVED BY: Wayne Lutz

1. TRACK - 3 3/16 " high by 1 1/2 " wide extruded aluminum 1/8 " thick track material.
2. END STOP - 1 7/8 " long by 7/8 " wide u-shaped PLT-plated steel material with 1/4 " dia. hole punched at each end. The bottom of the end stop will have (2) 1/4 " square punched holes for (2) carriage bolts to slide through. Two assemblies required for each single track SBTA system and four required for double track systems.

   Note: the rubber bumper end stop goes on the primary track.

3. CARRIAGE BOLT - Two carriage bolts will be supplied to attach end stop to bottom side of track. The head of carriage bolt will drop down from inside of track through end stop and connection plate and attach with 1/2" nyloc nut.
4. ATTACHMENT PLATE - 1 7/8 " long by 7/8 " wide flat PLT-plated steel with two 1/4 " prepunched holes to accept (2) carriage bolts designed to pinch end stop agianst bottom lip of track.
5. RUBBER BUMPER - 3/4 " diameter by 1/2 " thick rubber bumper attaches using 3/4 " long by 3/16" threaded spindle anchored to back end of bumper for simple attachment to end stop.
6. SECURITY BOLT - Installer must drill 1/4 " dia hole 1/2 " in from end of disconnection side of track. Use 1/4 " x 2 1/2 " long PLT - plated bolt with 1/4" nyloc nut.

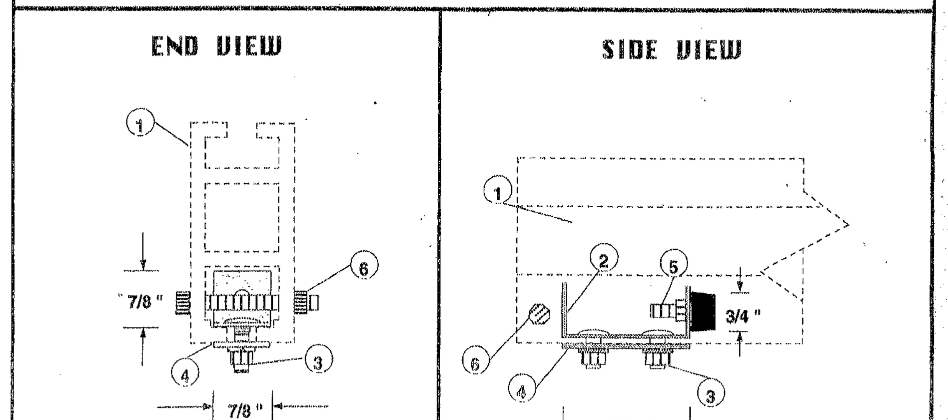

PLYMOVENT Vehicle Exhaust Ventilation Apparatus | Plymovent Corporation 375 Raritan Center Pkwy Edison, NJ 08837 Phone: 908-417-0808 Fax: 908-417-1818 | This drawing has been copyrighted and is the property of Plymovent Corp of Edison, NJ and shall not be disclosed without written consent to any 3rd party.

GRABBER MOUNTING PROCEDURE

DATE: 8-28-95 | DIVISION: Fire systems | TAB: 6 - G | APPROVED BY: Wayne Lutz

1. GRABBER - Offered in 4.75", 6.25" & 8" diameter (I.D.) sizes. Designed to inflate and fit around vehicle tailpipes from 1 - 6 " in diameter. Made from high temperature synthetic rubber with Nomex Liner.
2. REDUCING ELBOW - to 4 " diameter 67 ° chrome reducing elbow. Fabricated from 16 gage steel chrome - plated. Constructed completely of airtight welds.
3. HOSE BARB - 8mm fitting incorporated into Grabber construction for filling and deflating Grabber Nozzle.
4. HOSE CLAMP - Heavy-duty diameter stainless steel hose clamp. A 5/16 " drive nut for tightening clamp is located on bottom of Grabber opposite yellow label.
5. WELD JOINT - Weld on chrome reducer. Must line up with top of Grabber.

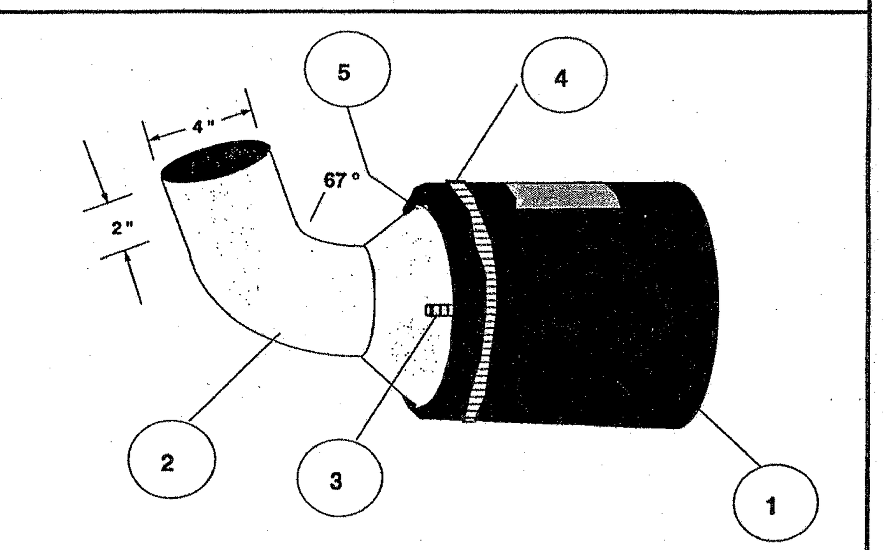

PLYMOVENT Vehicle Exhaust Ventilation Apparatus | Plymovent Corporation 375 Raritan Center Pkwy Edison, NJ 08837 Phone: 908-417-0808 Fax: 908-417-1818 | This drawing has been copyrighted and is the property of Plymovent Corp of Edison, NJ and shall not be disclosed without written consent to any 3rd party.

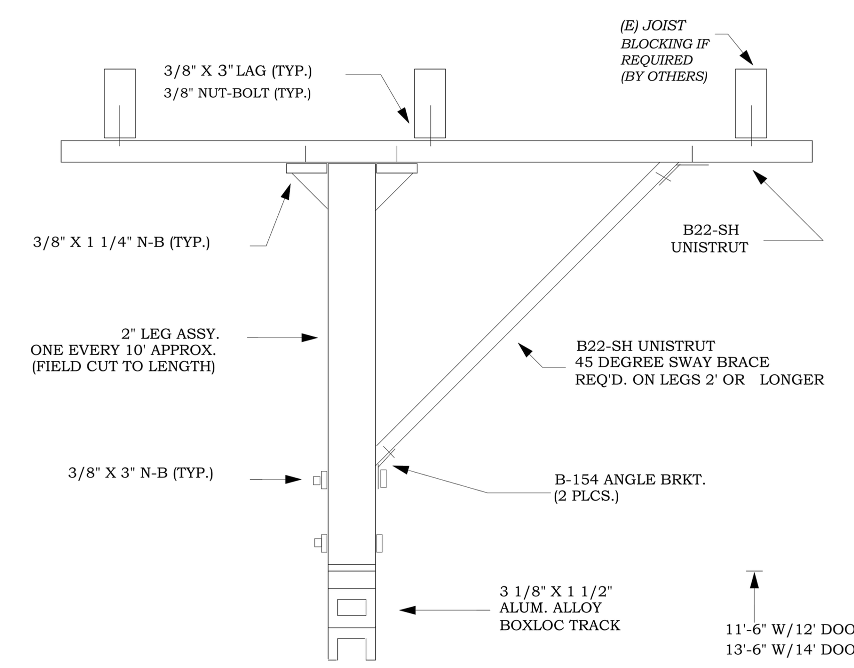

STD. SUPPORT LEG
SBTA -21

LDA
DESIGNERS & ARCHITECTS

Architect:
LDA Partners, LLP
Designers & Architects
222 Central Court
Stockton, CA 95204
209.943.0405
www.ldapartners.com

LICENSED ARCHITECT ERIC WILLIAM WOHLE C28388 September 2021 STATE OF CALIFORNIA

Client:
LATHROP-MANTECA FIRE PROTECTION DISTRICT
19001 SOMERSTON PARKWAY
LATHROP, CA 95330
209.941.5102

Project:
FIRE STATION 31 UPGRADES

800 J STREET
LATHROP CA 95330

Project No.: ###-#-##
Drawn By: DW
Checked By: GL

No.	Description	Date	By
1	PLAN CHECK #1 1ST REVIEW CYCLE	10-21-2020	
2	PLAN CHECK #2 ADDENDA 1	12-09-2020	

3RD SUBMITTAL - BLDG. DEPT.
12/09/2020

MECHANICAL -
DETAILS (PLYMOVENT - SBTA)

REGISTERED PROFESSIONAL ENGINEER ALLEN LAXMAN M30029 JUNE 30, 2022 MECHANICAL STATE OF CALIFORNIA

neXus engineering
Consulting Mechanical Engineers
1400 Lone Palm Ave, Suite A
Modesto, CA 95351
Tel: 209.572.7399 Fax: 209.236.1579
www.nexusengineering.net
HVAC . Plumbing/Piping . Fire Sprinklers
Process/Plant Engineering . Refrigeration

M5.01

J:\2020 Jobs\20140 - Lathrop Fire Station\20140 - Mechanical.dwg, 12/9/2020 2:24:53 PM, DWG To PDF.pc3

4.4 VSRX-Rail Location

1. VSRX-Rail
2. Tailpipe
3. Bay door
4. Rail height
5. Distance to vehicle
6. Distance to exit door

a. The VSRX-Rail (1) is mounted at a height (4) between 12 ft (3,7 m) and 14 ft (4,3 m) over the floor on the side in which the tailpipe (2) is located.

b. The rail should be mounted 18 in. to 24 in. (457,2 to 609,6 mm) from the body of the vehicle (5), and positioned on the tailpipe side of the vehicle. Preferably the rail is on or within the boundaries of the exit door.

c. The rail should be mounted immediately under a sectional door with a clear height from the track to the door of 4 in. (100 mm) to 6 in. (150 mm).

d. The recommended distance from the end of the rail to the door(s) (6) can be found in the table on page 10.

WARNING
PRODUCT MAY CONTAIN SHARP EDGES
Use care when servicing unit. Failure to do so could result in minor personal injury.

End view

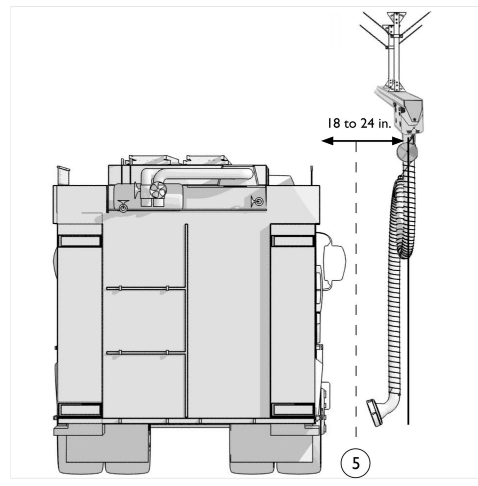

Sideview

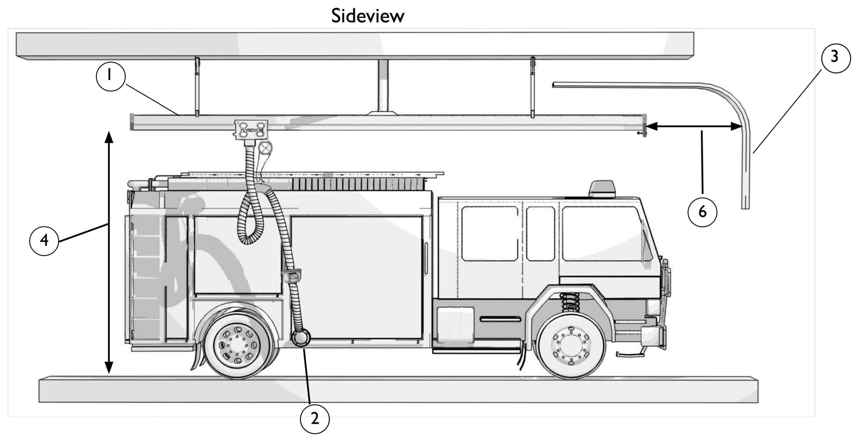

4.5 Assemble the Legs and Rail

1. Support Legs
2. Unistrut bar clamps
3. Side Braces
4. Rail

a. If you are attaching the Support Legs to steel beems, use the Unistrut bar clamps. To attach to the top or bottom of a bar joist, use a thru bolt in the slot of the bar joist.

b. Mount the Support Leg to the roof or to beams. The first leg will be approximately 3 to 4 ft from the end of the track or rail. Leg assemblies will need to be placed every 10 to 12 ft. and braced side to side using the appropriate length (20, 30 or 72 in.) side brace kit.

Note: Longer braces can be made out of ¾ in. EMT conduit and attached to the leg using a Plymovent 8130-1011 leg/ brace mounting kit. You should have at least one long brace running front to back.

c. To calculate the leg length, determine the mounting height of the rail, then subtract that dimension from the bottom of the strut. Cut the aluminum square tube to this length.

Center a triangular foot and drill 2- 13/32 in. holes to attach foot. Repeat for the bottom foot positioned perpendicular to the rail (4). Attach the leg assembly to the strut on ceiling using 3/8 in. strut hardware. Attach the side brace kit (3).

For multiple legs, turn the side braces perpendicular to the rail and install one long front to back brace. Repeat for each leg assembly.

d. To splice two rails, position the rail sections on saw horses. Insert and center a splice plate (6) inside the rail (5), clamp in place with a C-Grip and drill 2- 5/16 in. holes on top 2 in. from the joint and 4 in. apart.

On both sides, drill the first 5/16 in. hole in the center of the recessed area 1 in. from the joint and the second 5/16 in. hole 2 ½ in. from the first hole. Insert the bolts but leave them loose. Silicone the joint and slide the other rail section onto the splice. Line up straight in both directions and clamp. Drill the same holes on the mating rail. Tighten the bolts in sequence - first tighten the top 4 bolts, and then the remaining 8 bolts on the sides for a total of 12 bolts.

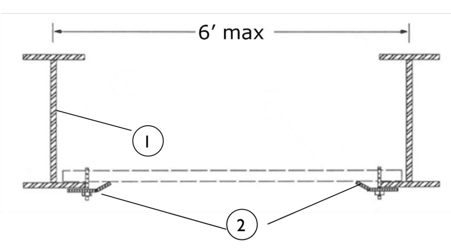

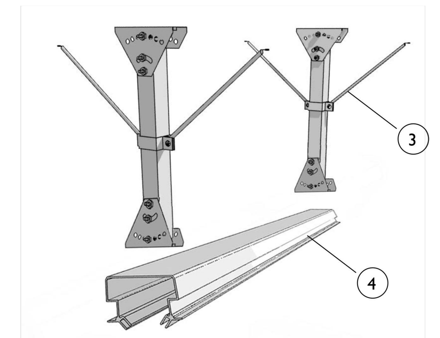

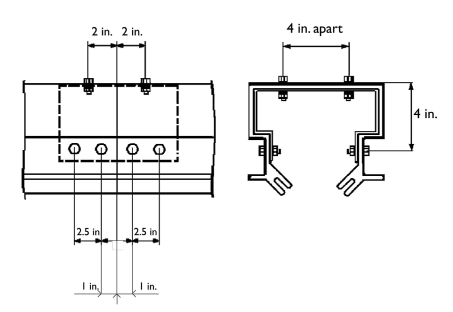

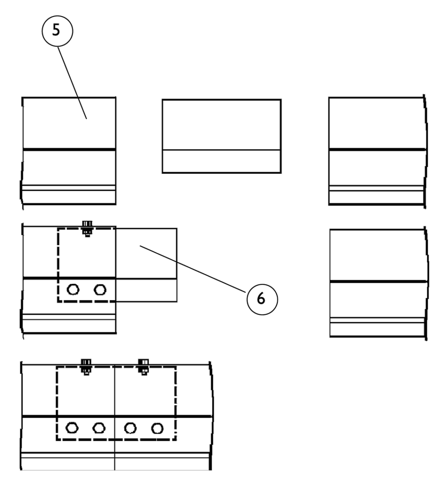

4.6 Mount the Rubber Seal

1. VSR profile
2. Rubber seal
3. Tool no. 0000102158

a. Turn the rail profile with the opening upwards.

The rubber lip seal can be easily installed with the Plymovent VSR Lip Tool before hanging the rail from the support legs; or you can install the lip after the rail is hung from the support legs.

The rubber lip seals are directional and must be installed with the inside bend towards the center of the rail or facing each other. With the rail still on saw horses, install the rubber lip with the bend facing inward. Spray the lip and aluminum channel with a soapy solution this will ease installation.

Start installing the first 6 in. of rubber lip by hand using a screwdriver and then position the lip tool on the rail to roll the rest of the lip into the bend. Cut the ends at a 90 degree flush with the end of the rail. Repeat for the other side.

4.7 Install the End Caps

Place each end cap on the rail and drill 4 3/8 in. holes through the pre-punched holes in the end caps. Secure the end cap with the provided hardware. Repeat for the back end cap, but do not install until the rail is hung, so you can install the crab/trolley.

For the front end cap (nearest the door), install the shock absorber centered in the end cap, apply Blue Loctite on nuts and tighten securely.

4.8 Hang the Rail

On the top of the rail, lay out 3/8" inch holes, for the leg mounting feet locations, to match the distances between the leg assemblies previously hung from the ceiling.

Pre drill these holes. Raise the pre assembled rail using multiple scissor lifts or lifting mechanisms such as a chain fall. Position rail under leg assemblies and attach with hardware.

Note! The rubber seal must be angled inward.

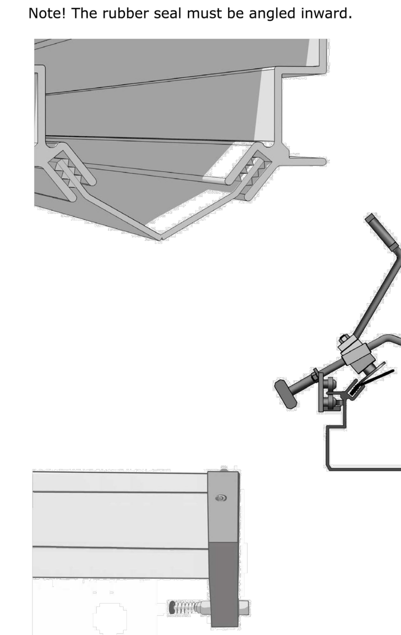

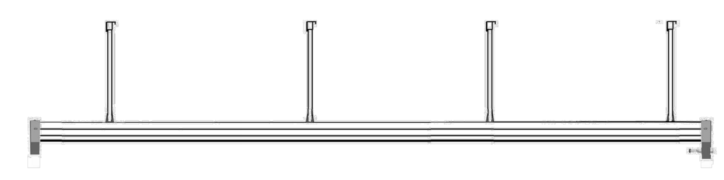

4.9 Assemble and Hang the Hose and Grabber

1. VSRX-profile
2. Grabber
3. Saddle
4. Crab Trolley
5. Balancer

WARNING
PRODUCT MAY CONTAIN SHARP EDGES
Use care when servicing unit. Failure to do so could result in minor personal injury.

Follow these steps to assemble and align the exhaust hose assembly:

a. Mount the upper hose (1) to the trolley using a hose clamp.

b. Attach the upper hose to the short side (from the tab) of the metal saddle (2). You may need to twist the hose to to have the u-bend or loop positioned away from the vehicle in the 3 o'clock position if looking down at the crab trolley, with the balancer at the 12 o'clock position.

c. Install the balancer (3) using the caribiner hook and safety cable (4), and attach the Balancer Locking Cable (BLC) to the trolley (5). Asemble the BLC using the length listed in the Installation Table on page 10. Ideally, 6 in. (15 cm) of the Balancer cable should be exposed when the Grabber nozzle is connected to the vehicle.

Install the BLC so that it is on the back side of the balancer and away from the adjustment locking clip. This will keep the BLC from coming into contact and potentially breaking the locking clip. The balancer snap hook should be oriented with the catch or door of the hook on the same side of the balancer as the locking clip. This will ensure that the BLC does not open the snap hook, allowing the BLC to come loose. The BLC attachment to the metal saddle snap hook should be opposite of the catch or door so that it does not open it.

d. Attach the mid hose (6) to the long side of the metal saddle with the supplied hose clamp. The ST mid hose is directional, so install with directional arrow pointing up or with the airflow.

e. With the balancer holding the hose all the way up cut the mid hose at approx 4 ft (1,2 m) from the floor and attach to the Safety Disconnect Handle with the supplied hose clamp (7).

f. The height of the Grabber nozzle should be in. 14 to 18 in. (35,5 to 45,7 cm) from the finished floor (8).

g. Secure the back end cap using the holes previously drilled (9).

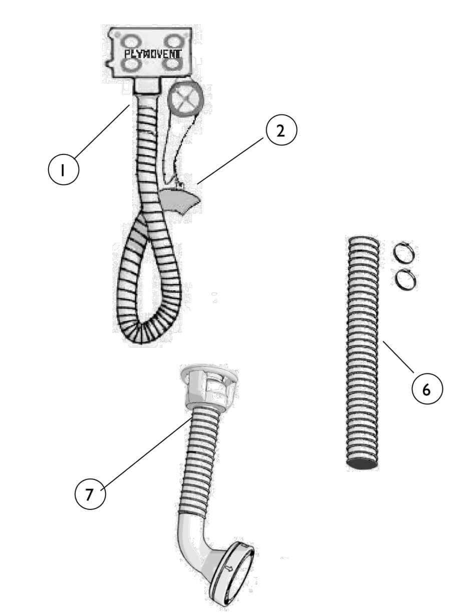

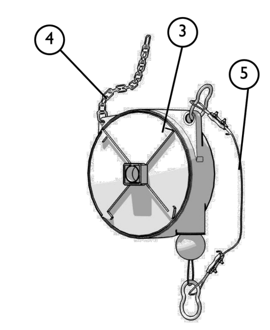

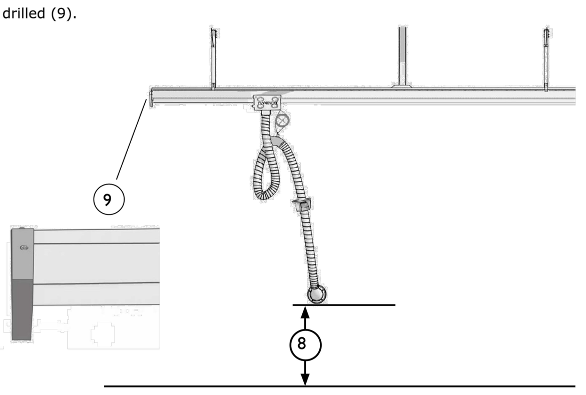

GRABBER MOUNTING PROCEDURE

DATE: 8-28-95	DIVISION: Fire systems	TAB: 6 - G	APPROVED BY: Wayne Lutz

1. **GRABBER -** Offered in 4.75", 6.25" & 8" diameter (I.D.) sizes. Designed to inflate and fit around vehicle tailpipes from 1 - 6 " in diameter. Made from high temperature synthetic rubber with Nomex Liner.

2. **REDUCING ELBOW -** to 4 " diameter 67 ° chrome reducing elbow. Fabricated from 16 gage steel chrome - plated. Constructed completely of airtight welds.

3. **HOSE BARB -** 8mm fitting incorporated into Grabber construction for filling and deflating Grabber Nozzle.

4. **HOSE CLAMP -** Heavy-duty diameter stainless steel hose clamp. A 5/16 " drive nut for tightening clamp is located on bottom of Grabber opposite yellow label.

5. **WELD JOINT -** Weld on chrome reducer. Must line up with top of Grabber.

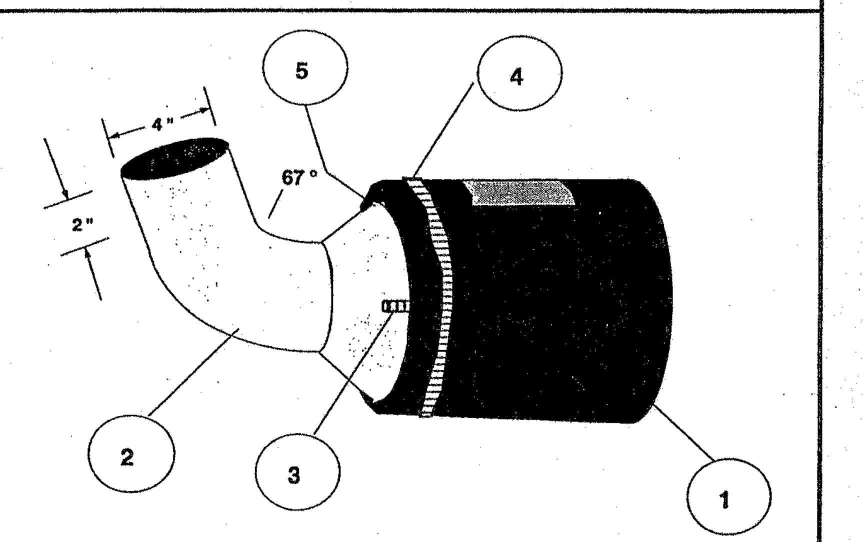

PLYMOVENT
Vehicle Exhaust Ventilation Apparatus

Plymovent Corporation
375 Raritan Center Pkwy
Edison, NJ 08837
Phone: 908-417-0808
Fax: 908-417-1818

This drawing has been copyrighted and is the property of Plymovent Corp of Edison, NJ and shall not be disclosed without written consent to any 3rd party.

PLYMOVENT®
clean air at work

Product: Vehicle Square Rail with External Trolley (VSRX)

Summary: VSRX provides exceptional airflow volume to support apparatus bays in which two to four heavy-duty vehicles are aligned. The trolley travels outside of the rail profile, and the trolley duct opens the rubber seal lips within the profile.

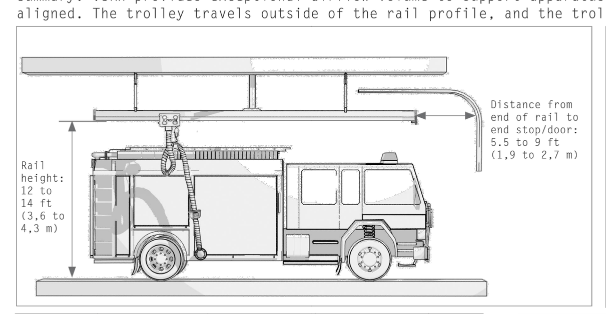

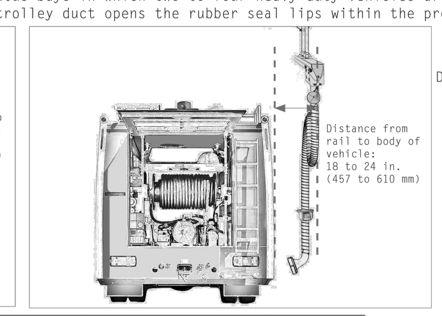

Drawings are not to scale.

System Specifications

Type	Length: ft (m)	# of Suspensions	Weight: lbs (kg)	QTY
VSRX-20	19 (5,8)	2	210 (95,3)	
VSRX-30	28.5 (8,68)	3	309 (145,1)	
VSRX-35	31.75 (9,7)	3	339 (149,7)	
VSRX-40	38 (11,58)	4	393 (178,2)	
VSRX-45	42.75 (13)	4	427 (193,6)	
VSRX-50	47.5 (14,47)	5	471 (213,6)	
VSRX-55	51.75 (15,77)	5	507 (229,9)	
VSRX-60	57 (17,37)	6	552 (250,3)	
VSRX-65	61.75 (18,82)	6	591 (268,1)	
VSRX-70	66.5 (20,26)	7	629 (285,3)	
VSRX-75	71.25 (21,7)	7	662 (300,3)	3
VSRX-80	76 (23,16)	8	710 (322,1)	
VSRX-85	81.75 (25)	8	741 (336,1)	
VSRX-90	85.5 (26,1)	9	782 (354,7)	
VSRX-95	92.5 (28,2)	9	833 (377,8)	
VSRX-100	95 (28,95)	10	887 (402,3)	
VSRX-120	114 (34,74)	12	1,053 (477,6)	

Support Details

L	Brace Length	X1	X2
0 - 1.5 ft (0 - 0,45 m)	N/A	0	0
1.5 - 3 ft (0,45 m - 0,91 m)	20 in. (508 mm)	14 in. (356 mm)	14 in. (356 mm)
3 - 6 ft (0,91 - 1,82 m)	30 in. (762 mm)	21 in. (533 mm)	21 in. (533 mm)
6 - 10 ft (1,82 - 3 m)	72 in. (1829 mm)	51 in. (1295 mm)	51 in. (1295 mm)

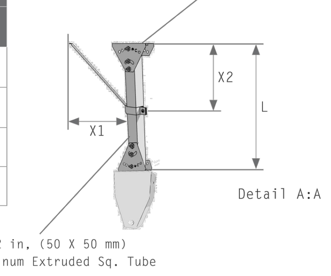

Notes:
1. System support method: see Detail A:A and Support Details Table.
2. System location: See System Specifications Table.
3. System temperature resistance: 400°F (204°C) continuous/500°F (260°C) intermittent.
4. Weight based on 1 crab and hose assembly; each additional crab/hose adds 40 lbs (18 kg).
5. If using Plymovent Pneumatic Grabber, add additional 50 lbs (23 kg) per rail system.

Disclaimer: The intended use of this drawing is to provide general equipment dimensions. The information provided is confidential and proprietary to Plymovent Corp. and is not to be recreated, modified and/or otherwise distributed without written consent of Plymovent Corp. There are no expressed or implied warranties concerning the accuracy, completeness, reliability, or usability of this information. Use of this or any Plymovent Corp. drawing, for purposes other than its intended use, is unlawful and actions may be taken against the violating party(ies).

Job name:	DWG BY: RS	Revision: 2	Rev. date: 06/13/18
Engineer:	Plymovent Corp. 5 Corporate Drive Cranbury, NJ 08512 800-644-0911	VSRX	
Customer:			

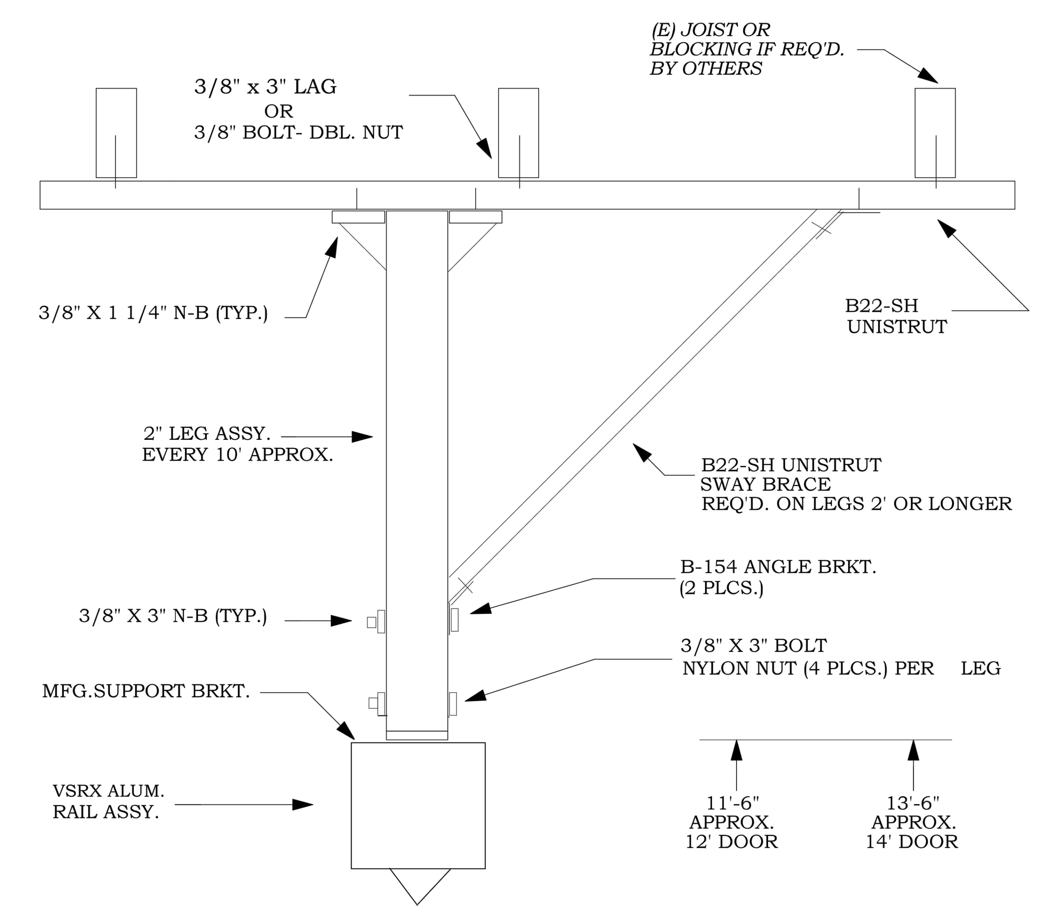

STD. SUPPORT LEG
VSRX

LDA
DESIGNERS & ARCHITECTS

Architect:
LDA Partners, LLP
Designers & Architects
222 Central Court
Stockton, CA 95204
209.943.0405
www.ldapartners.com

LICENSED ARCHITECT ERIC WILLIAM WOHLE C28388 September 2021 STATE OF CALIFORNIA

Client:
LATHROP-MANTECA FIRE PROTECTION DISTRICT
19001 SOMERSTON PARKWAY
LATHROP, CA 95330
209.941.5102

Project:
FIRE STATION 31 UPGRADES

800 J STREET
LATHROP CA 95330

Project No.: ###-#-##
Drawn By: DW
Checked By: GL

No.	Description	Date	By
1	PLAN CHECK #1 1ST REVIEW CYCLE	10-21-2020	
2	PLAN CHECK #2 ADDENDA 1	12-09-2020	

3RD SUBMITTAL - BLDG. DEPT.
12/09/2020

REGISTERED PROFESSIONAL ENGINEER ALLEN LAYMAN M30029 JUNE 30, 2022 MECHANICAL STATE OF CALIFORNIA

MECHANICAL -
DETAILS (PLYMOVENT - VSRX)

neXus engineering
Consulting Mechanical Engineers
1400 Lone Palm Ave, Suite A
Modesto, CA 95351
Tel: 209.572.7399 Fax: 209.236.1579
www.nexusengineering.net
HVAC . Plumbing/Piping . Fire Sprinklers
Process/Plant Engineering . Refrigeration

M5.02

J:\2020 Jobs\20140 - Lathrop Fire Station\20140 - Mechanical.dwg, 12/9/2020 2:25:02 PM, DWG To PDF.pc3

STATE OF CALIFORNIA
Envelope Component Approach
NRCC-ENV-E
CALIFORNIA ENERGY COMMISSION

CERTIFICATE OF COMPLIANCE			NRCC-ENV-E
This document is used to demonstrate compliance with mandatory requirements in §110.8(g) and §120.7(b) for newly constructed buildings, and §141.0(b)1 for alterations, related to roof, wall and floor assemblies. It is also used to demonstrate compliance with prescriptive requirements in §140.3 for newly constructed buildings, and §141.0 for additions and alterations, related to roof, wall, floor, door, fenestration and daylighting requirements.			
Project Name:	Fire Station 31 Upgrades	**Report Page:**	**(Page 1 of 6)**
Project Address:	800 J Street	**Date Prepared:**	11/2/2020

A. GENERAL INFORMATION

01	Project Location (city)	Lathrop	05	# of Stories (Habitable Above Grade)	1
02	Zipcode	95330	06	Total Conditioned Floor Area (ft²)	2633
03	Climate Zone	12	07	Total Unconditioned Floor Area (ft²)	0
04	Occupancy Types Within Project: (select all that apply): If one occupancy constitutes >= 80% of the conditioned floor area, the entire building envelope may be designed to comply with the provisions of that occupancy per §100.0(f).		08	☐ Project includes unconditioned enclosed space(s) > 5,000 ft² under a roof with a ceiling height of at least 15 ft.[1]	
☒	All Nonresidential, including Relocatable Public School Building certified for use in one climate zone Occupancy: A / B / E / F / H / M / S / U	☐ Relocatable Public School Building for use in all climate zones Occupancy: E	☐ High-Rise Residential Occupancy: R-2 / R-3	☒ Hotel/Motel Guest Rooms Occupancy: R-1	

[1] FOOTNOTE: Enclosed spcases > 5,000 ft² directly under roof with ceiling height > 15 ft in climate zones 2 through 15 are required to meet the minimum daylighting requirements defined in §140.3(c). Compliance with §140.3(c) is documented in Table L. This is the only prescriptive requirement which applies to unconditioned spaces.

B. PROJECT SCOPE

This table specifies project envelope components within the permit application demonstrating compliance using the prescriptive paths outlined in §140.3, and §141.0(a)1 and §141.0(b)1 and 2 for additions and alterations.

My project consists of (check all that apply) 01	Component Types 02		
☐ New Construction or Newly Conditioned Space	☐ Roof	☐ Walls	☐ Exterior Doors
☐ One or more enclosed spaces > 5,000 ft² directly under roof with ceiling height > 15ft		☐ Floors	☐ Fenestration/ Glazing Doors[1]
☐ Addition of conditioned space	☐ Roof	☐ Walls	☐ Exterior Doors
☐ One or more enclosed spaces > 5,000 ft² directly under roof with ceiling height > 15ft		☐ Floors	☐ Fenestration/ Glazing Doors[1]
☒ Alteration of conditioned space	☐ Roof Assembly	☒ Walls	Exterior Doors NA. for Alts.
☐ One or more enclosed spaces > 5,000 ft² directly under roof with ceiling height > 15ft and lighting system installed for the first time	☐ Roofing Material	☐ Floors	☒ Fenestration/ Glazing Doors

[1]FOOTNOTE: Doors that are more than one-half glass in area are considered Glazed Doors and should be documented on table K with fenestration.

STATE OF CALIFORNIA
Envelope Component Approach
NRCC-ENV-E
CALIFORNIA ENERGY COMMISSION

CERTIFICATE OF COMPLIANCE			NRCC-ENV-E
Project Name:	Fire Station 31 Upgrades	**Report Page:**	**(Page 2 of 6)**
Project Address:	800 J Street	**Date Prepared:**	11/2/2020

C. COMPLIANCE RESULTS

Results in this table are automatically calculated from data input and calculations in Tables F through L. Note: If any cell on this table says "COMPLIES with Exceptional Conditions" refer to Table D. Exceptional Conditions for guidance or see the applicable table referenced below.

Opaque Envelope Components					Fenestration	Daylighting Spaces > 5,000ft²	Compliance Results
Roof Assembly	Roofing Materials	Walls	Floors	Doors			
01	02	03	04	05	06	07	08
(See Table F)	(See Table G)	(See Table H)	(See Table I)	(See Table J)	(See Table K)	(See Table L)	COMPLIES
Yes	Yes	Yes		Yes	Yes		

D. EXCEPTIONAL CONDITIONS
This table is auto-filled with uneditable comments because of selections made or data entered in tables throughout the form.

E. ADDITIONAL REMARKS
This table includes remarks made by the permit applicant to the Authority Having Jurisdiction.

F. ROOF ASSEMBLY SCHEDULE
This section does not apply to this project.

G. RATED ROOFING MATERIAL (COOL ROOF)
This section does not apply to this project.

H. WALL ASSEMBLY SCHEDULE
This table demonstrates compliance with prescriptive wall assembly requirements in §140.3(a)2 and §140.3(a)3 for new constructions or additions, or mandatory wall assembly requirements in §141.0(b)1B for alterations.

01	Indicate wall types included in the project:[1]	☐ Framed	☐ Mass (new only)	☐ Concrete Sandwich Panel (new only)	☐ SIPS	☐ ICF (new only)
		☐ Metal Panels	☐ Metal Building	☐ Spandrel/ Curtain Wall	☐ Straw Bale	☐ Log Home (new only)

[1] FOOTNOTES: Wall types indicated above as "(new only)" do not have Title 24, Part 6 requirements for alterations. New construction and additions do have requirements and should be clicked above and compliance demonstrated within this table.

STATE OF CALIFORNIA
Envelope Component Approach
NRCC-ENV-E
CALIFORNIA ENERGY COMMISSION

CERTIFICATE OF COMPLIANCE			NRCC-ENV-E
Project Name:	Fire Station 31 Upgrades	**Report Page:**	**(Page 3 of 6)**
Project Address:	800 J Street	**Date Prepared:**	11/2/2020

I. FLOOR ASSEMBLY SCHEDULE
This section does not apply to this project.

J. EXTERIOR DOOR SCHEDULE
This section does not apply to this project.

K. FENESTRATION AND GLAZED DOOR SCHEDULE
This table demonstrates compliance with prescriptive fenestration requirements in §140.3(a)5 for new constructions or additions, or §140.1(b)2A for alterations. Exterior doors that are more than one-half glass in area are considered Glazed Doors and should be documented on this table with fenestration.

01	Indicate fenestration types included in the project:[1]	☒ Vertical (alterations)	☐ Vertical (new)	☐ Skylights	☐ Glazed Doors (new only)

[1] FOOTNOTES: Floor types indicated above as "(new only)" do not have Title 24, Part 6 requirements for alterations. New construction and additions do have requirements and should be clicked above and compliance demonstrated within this table.

Vertical Fenestration- U-factor, Solar Heat Gain Coefficient (RSHGC/ SHGC), Visible Transmittance (VT)

01	☒	Calculate Area-Weighted Average U-factor for Vertical Fenestration[1]
02	☒	Calculate Area-Weighted Average (R)SHGC for Vertical Fenestration[1]
03	☒	Calculate Area-Weighted Average VT for Vertical Fenestration[1]

Vertical Fenestration- U-factor, Solar Heat Gain Coefficient (RSHGC/ SHGC), Visible Transmittance (VT)

04 Tag/Plan Detail ID	05 Fenestration Type	06 Occupancy & Status	07 (R)SHGC Compliance Method	08 VT Compliance Method	09 Calculation Method for Performance Values per Design[2]	10 Product Performance Unit	11 Required Product Performance	12 Product Performance per Design	13 Area ft²
Window	Fixed window	Nonresidential/ Relocatable 1 CZ : Alt. (Adding New > 50ft2)	Table 140.3-B/C/D	Table 140.3-B/C/D	§110.6 Defaults	U-factor (max)	0.71	0.71	130
					☐ Overhang used for RSHGC	(R)SHGC (max)	0.73	0.73	
						VT (min)	0.876	0.5	
Window	Fixed window	Nonresidential/ Relocatable 1 CZ : Alt. (Adding New > 50ft2)	Table 140.3-B/C/D	Table 140.3-B/C/D	§110.6 Defaults	U-factor (max)	0.71	0.71	72
					☐ Overhang used for RSHGC	(R)SHGC (max)	0.73	0.73	
						VT (min)	0.876	0.5	

STATE OF CALIFORNIA
Envelope Component Approach
NRCC-ENV-E
CALIFORNIA ENERGY COMMISSION

CERTIFICATE OF COMPLIANCE			NRCC-ENV-E
Project Name:	Fire Station 31 Upgrades	**Report Page:**	**(Page 4 of 6)**
Project Address:	800 J Street	**Date Prepared:**	11/2/2020

K. FENESTRATION AND GLAZED DOOR SCHEDULE

Vertical Fenestration- U-factor, Solar Heat Gain Coefficient (RSHGC/ SHGC), Visible Transmittance (VT)

04 Tag/Plan Detail ID	05 Fenestration Type	06 Occupancy & Status	07 (R)SHGC Compliance Method	08 VT Compliance Method	09 Calculation Method for Performance Values per Design[2]	10 Product Performance Unit	11 Required Product Performance	12 Product Performance per Design	13 Area ft²
Window	Fixed window	Nonresidential/ Relocatable 1 CZ : Alt. (Adding New > 50ft2)	Table 140.3-B/C/D	Table 140.3-B/C/D	§110.6 Defaults	U-factor (max)	0.71	0.71	16
					☐ Overhang used for RSHGC	(R)SHGC (max)	0.73	0.73	
						VT (min)	0.876	0.5	
Window	Fixed window	Nonresidential/ Relocatable 1 CZ : Alt. (Adding New > 50ft2)	Table 140.3-B/C/D	Table 140.3-B/C/D	§110.6 Defaults	U-factor (max)	0.71	0.71	16
					☐ Overhang used for RSHGC	(R)SHGC (max)	0.73	0.73	
						VT (min)	0.876	0.5	
Window	Fixed window	Nonresidential/ Relocatable 1 CZ : Alt. (Adding New > 50ft2)	Table 140.3-B/C/D	Table 140.3-B/C/D	NFRC Certified	U-factor (max)	0.36	0.3	115.5
					☐ Overhang used for RSHGC	(R)SHGC (max)	0.25	0.23	
						VT (min)	0.42	0.5	
Window	Fixed window	= High-rise Res/Hotel/ Motel : Alt. (Adding New > 50ft2)	Table 140.3-B/C/D	Table 140.3-B/C/D	§110.6 Defaults	U-factor (max)	0.71	0.71	16
					☐ Overhang used for RSHGC	(R)SHGC (max)	0.73	0.73	
						VT (min)	0.876	0.5	
Window	Fixed window	= High-rise Res/Hotel/ Motel : Alt. (Adding New > 50ft2)	Table 140.3-B/C/D	Table 140.3-B/C/D	NFRC Certified	U-factor (max)	0.36	0.3	16
					☐ Overhang used for RSHGC	(R)SHGC (max)	0.25	0.23	
						VT (min)	0.42	0.5	
Window	Fixed window	= High-rise Res/Hotel/ Motel : Alt. (Adding New > 50ft2)	Table 140.3-B/C/D	Table 140.3-B/C/D	NFRC Certified	U-factor (max)	0.36	0.3	16
					☐ Overhang used for RSHGC	(R)SHGC (max)	0.25	0.23	
						VT (min)	0.42	0.5	

22	Total Skylight Area using NA6 Default:[2]		
20	Total Glazed Door Area using NA6 Default:[2]		

STATE OF CALIFORNIA
Envelope Component Approach
NRCC-ENV-E
CALIFORNIA ENERGY COMMISSION

CERTIFICATE OF COMPLIANCE			NRCC-ENV-E
Project Name:	Fire Station 31 Upgrades	**Report Page:**	**(Page 5 of 6)**
Project Address:	800 J Street	**Date Prepared:**	11/2/2020

K. FENESTRATION AND GLAZED DOOR SCHEDULE

Area-Weighted Average U-factor, SHGC, VT Compliance Calculation for Vertical Fenestration And Glazed Doors

01 Product Performance Unit	02 Total Area of Fenestration (ft²)	03 Area-weighted Calculation for Fenestration: Required	04 Area-weighted Calculation for Fenestration: Designed	05 Compliance Results Using Area-Weighted Calculation Option
U-Factor	397.5	0.36	0.3	COMPLIES
(R)SHGC	397.5	0.25	0.23	COMPLIES
VT				

L. DAYLIGHT IN LARGE ENCLOSED SPACES
This section does not apply to this project.

M. DECLARATION OF REQUIRED CERTIFICATES OF INSTALLATION
Selections have been made based on information provided in this document. If any selection have been changed by the permit applicant, an explanation should be included in Table E Additional Remarks. These documents must be provided to the building inspector during construction and can be found online at https://www.energy.ca.gov/title24/2019standards/2019_compliance_documents/Nonresidential_Documents/NRCI/

Yes	No	Form/Title	Field Inspector: Pass	Field Inspector: Fail
●	○	NRCI-ENV-01-E - Must be submitted for all buildings	☐	☐

N. DECLARATION OF REQUIRED CERTIFICATES OF ACCEPTANCE
Selections have been made based on information provided in previous tables of this document. If any selection needs to be changed, form user must provide an explanation in Table E Additional Remarks. These documents must be provided to the building inspector during construction and can be found online at https://www.energy.ca.gov/title24/2019standards/2019_compliance_documents/Nonresidential_Documents/NRCA/. Indivudals who perform the field testing and verification work, and provide the information required for completion of the fenestration Certificate of Acceptance documentation are not required to be licensed professionals. However, the person who signs the Certificate of Acceptance document to certify compliance with the acceptance requirements shall be licensed as specified in Standards Section 10-103(a)4 and NA7.3.1

Yes	No	Form/Title	Field Inspector: Pass	Field Inspector: Fail
●	○	NRCA-ENV-02-F must be submitted for all new, added or altered fenestration.	☐	☐

STATE OF CALIFORNIA
Envelope Component Approach
NRCC-ENV-E
CALIFORNIA ENERGY COMMISSION

CERTIFICATE OF COMPLIANCE			NRCC-ENV-E
Project Name:	Fire Station 31 Upgrades	**Report Page:**	**(Page 6 of 6)**
Project Address:	800 J Street	**Date Prepared:**	11/2/2020

DOCUMENTATION AUTHOR'S DECLARATION STATEMENT
I certify that this Certificate of Compliance documentation is accurate and complete.

Documentation Author Name:	Documentation Author Signature:
Company: Nexus Engineering Inc.	Signature Date: 11-02-2020
Address:	CEA/ HERS Certification Identification (if applicable):
City/State/Zip:	Phone:

RESPONSIBLE PERSON'S DECLARATION STATEMENT
I certify the following under penalty of perjury, under the laws of the State of California:

1. The information provided on this Certificate of Compliance is true and correct.
2. I am eligible under Division 3 of the Business and Professions Code to accept responsibility for the building design or system design identified on this Certificate of Compliance (responsible designer)
3. The energy features and performance specifications, materials, components, and manufactured devices for the building design or system design identified on this Certificate of Compliance conform to the requirements of Title 24, Part 1 and Part 6 of the California Code of Regulations.
4. The building design features or system design features identified on this Certificate of Compliance are consistent with the information provided on other applicable compliance documents, worksheets, calculations, plans and specifications submitted to the enforcement agency for approval with this building permit application.
5. I will ensure that a completed signed copy of this Certificate of Compliance shall be made available with the building permit(s) issued for the building, and made available to the enforcement agency for all applicable inspections. I understand that a completed signed copy of this Certificate of Compliance is required to be included with the documentation the builder provides to the building owner at occupancy.

Responsible Designer Name: Eric Wohle	Responsible Designer Signature:
Company: LDA Designers & Architects	Date Signed: 2020-11-02
Address: 222 Central Court	License: C28388
City/State/Zip: Stockton CA 95204	Phone: 209-943-0405

STATE OF CALIFORNIA
Mechanical Systems
NRCC-MCH-E
CALIFORNIA ENERGY COMMISSION

CERTIFICATE OF COMPLIANCE			NRCC-MCH-E
This document is used to demonstrate compliance for mechanical systems that are within the scope of the permit application and are demonstrating compliance using the prescriptive path outlined in §140.4, or §141.0(b)2 for alterations.			
Project Name:	Fire Station 31 Upgrades	**Report Page:**	**(Page 1 of 12)**
Project Address:	800 J Street	**Date Prepared:**	11/2/2020

A. GENERAL INFORMATION

01	Project Location (city)	Lathrop	04	Total Conditioned Floor Area	2633
02	Climate Zone	12	05	Total Unconditioned Floor Area	0
03	Occupancy Types Within Project:		06	# of Stories (Habitable Above Grade)	1
☒ Office (B)		☐ Retail (M)	☐ Non-refrigerated Warehouse (S)		
☒ Hotel/ Motel Guest Rooms (R-1)		☐ School (E)	☐ Healthcare Facility (I)		
☐ High-Rise Residential (R-2/R-3)		☐ Relocatable Class Bldg (E)	☒ Other (write in)		See Table J

B. PROJECT SCOPE
This table Includes mechanical systems or components that are within the scope of the permit application and are demonstrating compliance using the prescriptive path outlined in §140.4, or §141.0(b)2 for alterations.

01 Air System(s)	02 Wet System Components	03 Dry System Components
☒ Heating Air System	☐ Water Economizer	☐ Air Economizer
☒ Cooling Air System	☐ Pumps	☐ Electric Resistance Heat
Mechanical Controls	☐ System Piping	☒ Fan Systems
☒ Mechanical Controls (existing to remain, altered or new)	☐ Cooling Towers	☐ Ductwork (existing to remain, altered or new)
	☐ Chillers	☒ Ventilation
	☐ Boilers	☐ Zonal Systems/ Terminal Boxes

STATE OF CALIFORNIA
Mechanical Systems
NRCC-MCH-E
CALIFORNIA ENERGY COMMISSION

CERTIFICATE OF COMPLIANCE			NRCC-MCH-E
Project Name:	Fire Station 31 Upgrades	**Report Page:**	**(Page 2 of 12)**
Project Address:	800 J Street	**Date Prepared:**	11/2/2020

C. COMPLIANCE RESULTS
Table C will indicate if the project data input into the compliance document is compliant with mechanical requirements. This table is not editable by the user. If this table says "DOES NOT COMPLY" or "COMPLIES with Exceptional Conditions" refer to Table D., or the table indicated as not compliant for guidance.

01		02		03		04		05		06		07		08	09
System Summary §110.1, §110.2, §140.4	AND	Pumps §140.4(k)	AND	Fans/ Economizers §140.4(c), §140.4(e)	AND	System Controls §110.2, §120.2, §140.4(f)	AND	Ventilation §120.1	AND	Terminal Box Controls §140.4(d)	AND	Distribution §120.3, §140.4(l)	AND	Cooling Towers §110.2(e)2	Compliance Results
(See Table F)		(See Table G)		(See Table H)		(See Table I)		(See Table J)		(See Table K)		(See Table L)		(See Table M)	
Yes	AND		AND	Yes	AND	Yes	AND	Yes	AND		AND		AND		COMPLIES
Mandatory Measures Compliance (See Table Q for Details)										COMPLIES					

D. EXCEPTIONAL CONDITIONS
This table is auto-filled with uneditable comments because of selections made or data entered in tables throughout the form.

E. ADDITIONAL REMARKS
This table includes remarks made by the permit applicant to the Authority Having Jurisdiction.

STATE OF CALIFORNIA
Mechanical Systems
NRCC-MCH-E
CALIFORNIA ENERGY COMMISSION

CERTIFICATE OF COMPLIANCE			NRCC-MCH-E
Project Name:	Fire Station 31 Upgrades	**Report Page:**	**(Page 3 of 12)**
Project Address:	800 J Street	**Date Prepared:**	11/2/2020

F. HVAC SYSTEM SUMMARY (DRY & WET SYSTEMS)
This table is used to demonstrate compliance for mechanical equipment with mandatory requirements found in §110.1 and §110.2(a) and prescriptive requirements found in §140.4(a), §140.4(b) and §140.4(k) or §141.0(b)2 for alterations.

Dry System Equipment Sizing (includes air conditioners, condensers, heat pumps, VRF, furnaces and unit heaters)

01 Name or Item Tag	02 Equipment Category per Tables 110.2	03 Equipment Type per Tables 110.2 & Title 20	04 Smallest Size Available[1] §140.4(a)	05 Heating Output[2,3]: Per Design (kBtu/h)	06 Heating Output[2,3]: Rated (kBtu/h)	07 Heating Output[2,3]: Supp. Heating Output (kBtu/h)	08 Cooling Output[2,3]: Sensible Per Design (kBtu/h)	09 Cooling Output[2,3]: Rated (kBtu/h)	10 Load Calculations[3,4]: Total Heating Load (kBtu/h)	11 Load Calculations[3,4]: Total Sensible Cooling Load (kBtu/h)
Office-Lobby	Unitary Heat Pumps	Air-cooled, split (3 phase)	NA: Load Controls	79.74	135	0	110.6	120	114.19	120.97
I.T. room	Unitary Heat Pumps	Air-cooled, split (3 phase)	NA: Load Controls	14.18	24	0	23.07	26	-0.11	34.89

(Columns 05–11: Equipment Sizing per Mechanical Schedule (kBtu/h) §140.4 (a&b))

[1]FOOTNOTES: Equipment shall be the smallest size, within the available options of the desired equipment line, necessary to meet the design heating and cooling loads of the building per §140.4(a). Healthcare facilities are excepted.
[2]It is common practice to show rated output capacity on the equipment schedule. Sensible cooling output comes from specification sheet tables.
[3] If equipment is heating only, leave cooling output and load blank. If equipment is cooling only, leave heating output and load blank.
[4] Authority Having Jurisdiction may ask for load calculations used for compliance per §140.4(b).

LDA
DESIGNERS & ARCHITECTS

Architect:
LDA Partners, LLP
Designers & Architects
222 Central Court
Stockton, CA 95204
209.943.0405
www.ldapartners.com

LICENSED ARCHITECT ERIC WILLIAM WOHLE C28388 September 2021 STATE OF CALIFORNIA

Client:
LATHROP-MANTECA FIRE PROTECTION DISTRICT
19001 SOMERSTON PARKWAY
LATHROP, CA 95330
209.941.5102

Project:
FIRE STATION 31 UPGRADES

800 J STREET
LATHROP CA 95330

Project No.: ###-#-##
Drawn By: DW
Checked By: GL

No.	Description	Date	By
1	PLAN CHECK #1 1ST REVIEW CYCLE	10-21-2020	
2	PLAN CHECK #2 ADDENDA 1	12-09-2020	

3RD SUBMITTAL - BLDG. DEPT.
12/09/2020

ENERGY COMPLIANCE

REGISTERED PROFESSIONAL ENGINEER · MECHANICAL · STATE OF CALIFORNIA

neXus engineering
Consulting Mechanical Engineers
1400 Lone Palm Ave, Suite A
Modesto, CA 95351
Tel: 209.572.7399 Fax: 209.236.1579
www.nexusengineering.net
HVAC . Plumbing/Piping . Fire Sprinklers
Process/Plant Engineering . Refrigeration

T24.01

J:\2020 Jobs\20140 - Lathrop Fire Station\20140 - Title-24.dwg, 12/9/2020 2:25:11 PM, DWG To PDF.pc3

F. HVAC SYSTEM SUMMARY (DRY & WET SYSTEMS)

Dry System Equipment Efficiency (other than Package Terminal Air Conditioners (PTAC) and Package Terminal Heat Pumps (PTHP))

01	02	03	04	05	06	07	08	09
Name or Item Tag	Size Category (Btu/h)	Heating Mode				Cooling Mode		
		Rating Condition (°F)	Efficiency Unit	Minimum Efficiency Required per Tables 110.2 / Title 20	Design Efficiency	Efficiency Unit	Minimum Efficiency Required per Tables 110.2 / Title 20	Design Efficiency
Office-Lobby	>=65,000 and <135,000		COP	3.3	3.81	EER IEER	11 12.2	12.65 26.05
I.T. room	<65,000		HSPF	8.2	11	SEER	13.0	21.4

G. PUMPS

This section does not apply to this project.

H. FAN SYSTEMS & AIR ECONOMIZERS

This table is used to demonstrate compliance with prescriptive requirements found in §140.4(c), §140.4(e) and §140.4(m) for fan systems. Fan systems serving only process loads are exempt from these requirements and do not need to be included in Table H.

System Name:	Office-Lobby	Economizer:[1]	NA: Special OA filtration	Economizer Controls:	Designed per §140.4(e) and (m)	System Fan Type:	Constant Volume

01	02	03	04	05	06	07	08
Fan Name or Item Tag	Fan Function	Qty	Maximum Design Supply Airflow (CFM)	HP Unit[2]	Design HP	Fan Power Pressure Drop Adjustment - Table 140.4-B: Device	Fan Power Pressure Drop Adjustment - Table 140.4-B: Design Airflow through Device (CFM)
SF	Supply	1	8300	BHP	1		
VRF	Other (Transfer, VAV box)	1	0	BHP	0.25		
VRF	Other (Transfer, VAV box)	1	0	BHP	0.25		
VRF	Other (Transfer, VAV box)	1	0	BHP	0.25		
VRF	Other (Transfer, VAV box)	1	0	BHP	0.5		
VRF	Other (Transfer, VAV box)	1	0	BHP	0.25		
VRF	Other (Transfer, VAV box)	1	0	BHP	0.25		
VRF	Other (Transfer, VAV box)	1	0	BHP	0.25		
Total System Design Supply Airflow (CFM):			8300	Total System Design (B)HP:	3	Maximum System Fan Power (B)HP:	7.8

System Name:	I.T. room	Economizer:[1]	NA: <=54 kBtu/h cooling	Economizer Controls:	Designed per §140.4(e) and (m)	System Fan Type:	Constant Volume

01	02	03	04	05	06	07	08
Fan Name or Item Tag	Fan Function	Qty	Maximum Design Supply Airflow (CFM)	HP Unit[2]	Design HP	Fan Power Pressure Drop Adjustment - Table 140.4-B: Device	Fan Power Pressure Drop Adjustment - Table 140.4-B: Design Airflow through Device (CFM)
SF	Supply	1	775	BHP	0.1		
Total System Design Supply Airflow (CFM):			775	Total System Design (B)HP:	0.1	Maximum System Fan Power (B)HP:	0.73

[1] *FOOTNOTES: Computer room economizers must meet requirements of §140.9(b) and will be documented on the NRCC-PRC-E document.*

H. FAN SYSTEMS & AIR ECONOMIZERS

[2] *The unit used for HP must be consistent for all fans within a system.*

I. SYSTEM CONTROLS

This table is used to demonstrate compliance with mandatory controls in §110.2 and §120.2 and prescriptive controls in §140.4(f) and (n) or requirements in §141.0(b)2E for altered space conditioning systems.

01	02	03	04	05	06	07	08	09
System Name	System Zoning	Conditioned Floor Area Being Served (ft²)	Thermostats §110.2(b) & (c)[1], §120.2(a)or §141.0(b)2E	Shut-Off Controls §120.2(e)	Isolation Zone Controls §120.2(e)	Demand Response §110.12 and §120.2(b)	Supply Air Temp. Reset §140.4(f)	Window Interlocks per §140.4(n)
Office-Lobby	Single zone	<= 25,000 ft²	Setback	Auto Timer Switch	4 Hour Timer	EMCS	Included	Provided
I.T. room	Single zone	<= 25,000 ft²	Setback	Auto Timer Switch	4 Hour Timer	EMCS	Included	Provided

[1]*FOOTNOTES: Gravity gas wall heaters, gravity floor heaters, gravity room heaters, non-central electric heaters, fireplaces or decorative gas appliances, wood stoves are not required to have setback thermostats.*

*Notes: Controls with a * require a note in the space below explaining how compliance is achieved. EX: system 1: SA Temp Reset: Exempt because zones compliant with §140.4(d) ; EXCEPTION 1 to §140.4(f)*

J. VENTILATION AND INDOOR AIR QUALITY

This table is used to demonstrate compliance with mandatory ventilation requirements in §120.1 and §120.2(e)3B for all nonresidential, high-rise residential and hotel/motel occupancies. For alterations, only ventialtion systems being altered within the scope of the permit application need to be documented in this table. In lieu of this table, the required outdoor ventilation rates and airflows may be shown on the plans or the calculations can be presented in a spreadsheet.

01	☐	Check the box if the project is showing ventilation calculations on the plans, or attaching the calculations instead of completing this table.
02	☒	Check this box if the project included Nonresidential or Hotel/Motel spaces
	☐	Check this box if the project included new or altered high-rise residential dwelling units.
03	☐	Check the box if the project is using natural ventilation in any nonresidential or hotel/motel spaces to meet required ventilation rates per §120.1(c)2.

Nonresidential and Hotel/ Motel Ventilation Systems

J. VENTILATION AND INDOOR AIR QUALITY

04	05			06			07
System Name	Office-Lobby	System Design OA CFM Airflow[1]	826	System Design Transfer Air CFM		0	Air Filtration per §120.1(c) and §141.0(b)2 [2] Provided per §120.1(c) (NR and Hotel/Motel))

08	09	10	11	12	13	14	15	16
Space Name ot Item Tag	Mechanical Ventilation Required per §120.1(c)3 [3]: Occupancy Type[4]	Conditioned Floor Area (ft²)	# of Shower heads/ toilets	# of people[5]	Exh. Vent per §120.1(c)4: Required Min OA CFM	Required Min CFM	Provided per Design CFM	DCV or Sensor Controls per §120.1(d)3, §120.1(d)5, and §120.1(e)3 [6]
FC-1	Office space	355			53.2	0	0	DCV: NA: Not required per §120.1(d)3 Occ Sensor: NA: Not required space type
FC-2	Office space	182			27.3	0	0	DCV: NA: Not required per §120.1(d)3 Occ Sensor: NA: Not required space type
FC-3	Health club/ weight rooms	399			59.8	0	0	DCV: NA: Not required per §120.1(d)3 Occ Sensor: NA: Not required space type
FC-4	Restaurant Dining Rooms	1241			620.5	0	0	DCV: NA: Not required per §120.1(d)3 Occ Sensor: NA: Not required space type
FC-5	Barracks sleeping area	157			23.6	0	0	DCV: NA: Not required per §120.1(d)3 Occ Sensor: NA: Not required space type

J. VENTILATION AND INDOOR AIR QUALITY

FC-6	Barracks sleeping area	137			20.6	0	0	DCV: NA: Not required per §120.1(d)3 Occ Sensor: NA: Not required space type
FC-7	Barracks sleeping area	137			20.6	0	0	DCV: NA: Not required per §120.1(d)3 Occ Sensor: NA: Not required space type
17	Total System Required Min OA CFM				826	18	Ventilation for this System Complies?	Yes

04	05			06			07
System Name	I.T. room	System Design OA CFM Airflow[1]	4	System Design Transfer Air CFM		0	Air Filtration per §120.1(c) and §141.0(b)2 [2] Provided per §120.1(c) (NR and Hotel/Motel))

08	09	10	11	12	13	14	15	16
Space Name ot Item Tag	Mechanical Ventilation Required per §120.1(c)3 [3]: Occupancy Type[4]	Conditioned Floor Area (ft²)	# of Shower heads/ toilets	# of people[5]	Exh. Vent per §120.1(c)4: Required Min OA CFM	Required Min CFM	Provided per Design CFM	DCV or Sensor Controls per §120.1(d)3, §120.1(d)5, and §120.1(e)3 [6]
FC-8	Computer Lab	25			3.8	0	0	DCV: NA: Not required per §120.1(d)3 Occ Sensor: NA: Not required space type
17	Total System Required Min OA CFM				4	18	Ventilation for this System Complies?	Yes

[1] *FOOTNOTES: System CFM should include both mechanical and natural ventilation for the zone/system*

[2] *Air filtration requirements apply to the following three system types per §120.1(c)1A : space conditioning systems utilizing ducts to supply air to occupiable space; supply-only ventilation systems providing outside air to occupiable space; supply side of balanced ventilation systems including heat recovery and energy recovery ventilation systems providing outside air to occupiable space.*

[3] *Uniform Mechanical Code may have more stringent ventilation requirements; the most stringent code requirement takes precedence.*

[4] *See Standards Tables 120.1-A and 120.1-B.*

[5] *For lecture halls with fixed seating, the expected number of occupants shall be shall be determined in accordance with the California Building Code.*

J. VENTILATION AND INDOOR AIR QUALITY

[4] *§120.2(e)3 requires systems serving rooms that are required by §130.1(c) to have lighting occupancy sensing controls to also have occupancy sensing zone controls for ventilation. Examples of spaces which require lighting occupancy sensors include offices 250ft² or smaller, multipurpose rooms less than 1,000 ft², classrooms, conference rooms, restrooms, aisles and open areas in warehouses, library book stack aisles, corridors, stairwells, parking garages, and loading and unloading zones, unless excepted by §130.1(c).*

K. TERMINAL BOX CONTROLS

This section does not apply to this project.

L. DISTRIBUTION (DUCTWORK and PIPING)

This section does not apply to this project.

M. COOLING TOWERS

This section does not apply to this project.

N. DECLARATION OF REQUIRED CERTIFICATES OF INSTALLATION

Selections have been made based on information provided in previous tables of this document. If any selection needs to be changed, please explain why in Table E Additional Remarks. These documents must be provided to the building inspector during construction and can be found online at https://www.energy.ca.gov/title24/2019standards/2019_compliance_documents/Nonresidential_Documents/NRCI/

Yes	No	Form/Title	Field Inspector: Pass	Field Inspector: Fail
●	○	NRCI-MCH-01-E - Must be submitted for all buildings	☐	☐

O. DECLARATION OF REQUIRED CERTIFICATES OF ACCEPTANCE

Selections have been made based on information provided in previous tables of this document. If any selection needs to be changed, please explain why in Table E Additional Remarks. These documents must be provided to the building inspector during construction and can be found online at https://www.energy.ca.gov/title24/2019standards/2019_compliance_documents/Nonresidential_Documents/NRCA/

Yes	No	Form/Title	Field Inspector: Pass	Field Inspector: Fail
●	○	NRCA-MCH-02-A - Outdoor Air must be submitted for all newly installed HVAC units. Note: MCH-02-A can be performed in conjunction with MCH-07-A Supply Fan VFD Acceptance (if applicable) since testing activities overlap.	☐	☐
●	○	NRCA-MCH-03-A - Constant Volume Single Zone HVAC NOTE: This form does not automatically move to "Yes". If Constant Volume Single Zone HVAC Systems are included in the scope, permit applicant should move this form to "Yes".	☐	☐
○	●	NRCA-MCH-04-A - Air Distribution Duct Leakage	☐	☐
○	●	NRCA-MCH-05-A - Air Economizer Controls	☐	☐
○	●	NRCA-MCH-06-A Demand Control Ventilation Systems must be submitted for all systems required to employ demand controlled ventilation (refer to §120.1(c)3) can vary outside ventilation flow rates based on maintaining interior carbon dioxide (CO_2) concentration setpoints.	☐	☐
○	●	NRCA-MCH-07-A Supply Fan Variable Flow Controls	☐	☐
○	●	NRCA-MCH-08-A Valve Leakage Test	☐	☐
○	●	NRCA-MCH-09-A Supply Water Temperature Reset Controls	☐	☐
○	●	NRCA-MCH-10-A Hydronic System Variable Flow Controls	☐	☐
○	●	NRCA-MCH-11-A Automatic Demand Shed Controls	☐	☐
○	●	NRCA-MCH-12-A FDD for Packaged Direct Expansion Units	☐	☐
○	●	NRCA-MCH-13-A Automatic FDD for Air Handling Units and Zone Terminal Units Acceptance	☐	☐
○	●	NRCA-MCH-14-A Distributed Energy Storage DX AC Systems Acceptance NOTE: This form does not automatically move to "Yes". If Distributed Energy System DX AC Systems are included in teh scope permit applicant should move this form to "Yes".	☐	☐
○	●	NRCA-MCH-15-A Thermal Energy Storage (TES) System Acceptance NOTE: This form does not automatically move to "Yes". If Chilled water Storage, Ice-on-Coil Internal Melt, Ice-on-Coil External melt, Ice Harvester, Brine, Ice-Slurry, Eutecti Salt, Clathrate Hydrate Slurry (CHS), Cryogenic or Encapsulated (Ice Ball) Systems are included in the scope, permit applicant should move this form to "Yes".	☐	☐
○	●	NRCA-MCH-16-A Supply Air Temperature Reset Controls	☐	☐
○	●	NRCA-MCH-17-A Condenser Water Temperature Reset Controls	☐	☐
○	●	NRCA-MCH-18-A Energy Management Control Systems	☐	☐

O. DECLARATION OF REQUIRED CERTIFICATES OF ACCEPTANCE

○	●	NRCA-MCH-19-A Occupancy Sensor Controls	☐	☐
○	●	NRCA-MCH-20 Multi-Family Ventilation	☐	☐
○	●	NRCA-MCH-21 Multi-Family Envelope Leakage	☐	☐

P. DECLARATION OF REQUIRED CERTIFICATES OF VERIFICATION

Selections have been made based on information provided in previous tables of this document. If any selection needs to be changed, please explain why in Table E Additional Remarks. These documents must be completed by a HERS Rater and provided to the building inspector during construction. The final documents must be created by a HERS Provider's registry, but drafts can be found online at https://www.energy.ca.gov/title24/2019standards/2019_compliance_documents/Nonresidential_Documents/NRCV/

Yes	No	Form/Title	Field Inspector: Pass	Field Inspector: Fail
○	●	NRCV-MCH-04-H Duct Leakaage Test *NOTE: Must be completed by a HERS Rater*	☐	☐
○	●	NRCV-MCH-24 Enclosure Air Leakaage Worksheet *NOTE: Must be completed by a HERS Rater*	☐	☐
○	●	NRCV-MCH-27 High-rise Resdential *NOTE: Must be completed by a HERS Rater*	☐	☐
○	●	NRCV-MCH-32 Local Mechanical Exhaust *NOTE: Must be completed by a HERS Rater*	☐	☐

Q. MANDATORY MEASURES DOCUMENTATION LOCATION

This table is used to indicate where mandatory measures are documented in the plan set or construction documentation.

01		02
		Plan sheet or construction document location
Compliance with Mandatory Measures documented through MCH Mandatory Measures Note Block	Yes	M-Sheets

DOCUMENTATION AUTHOR'S DECLARATION STATEMENT

I certify that this Certificate of Compliance documentation is accurate and complete.

Documentation Author Name:	Documentation Author Signature:
Company: Nexus Engineering Inc.	Signature Date: 11-02-2020
Address:	CEA/ HERS Certification Identification (if applicable):
City/State/Zip:	Phone:

RESPONSIBLE PERSON'S DECLARATION STATEMENT

I certify the following under penalty of perjury, under the laws of the State of California:

1. The information provided on this Certificate of Compliance is true and correct.
2. I am eligible under Division 3 of the Business and Professions Code to accept responsibility for the building design or system design identified on this Certificate of Compliance (responsible designer)
3. The energy features and performance specifications, materials, components, and manufactured devices for the building design or system design identified on this Certificate of Compliance conform to the requirements of Title 24, Part 1 and Part 6 of the California Code of Regulations.
4. The building design features or system design features identified on this Certificate of Compliance are consistent with the information provided on other applicable compliance documents, worksheets, calculations, plans and specifications submitted to the enforcement agency for approval with this building permit application.
5. I will ensure that a completed signed copy of this Certificate of Compliance shall be made available with the building permit(s) issued for the building, and made available to the enforcement agency for all applicable inspections. I understand that a completed signed copy of this Certificate of Compliance is required to be included with the documentation the builder provides to the building owner at occupancy.

Responsible Designer Name:	Responsible Designer Signature:
Allen Layman	
Company: Nexus Engineering	Date Signed: 2020-11-02
Address: 1400 Lone Palm, Suite A	License: M30029
City/State/Zip: Modesto CA 95351	Phone: 209-572-7399

LDA DESIGNERS & ARCHITECTS

Architect:
LDA Partners, LLP
Designers & Architects
222 Central Court
Stockton, CA 95204
209.943.0405
www.ldapartners.com

LICENSED ARCHITECT ERIC WILLIAM MOORE C28388 September 2021 STATE OF CALIFORNIA

Client:
LATHROP-MANTECA FIRE PROTECTION DISTRICT
19001 SOMERSTON PARKWAY
LATHROP, CA 95330
209.941.5102

Project:
FIRE STATION 31 UPGRADES
800 J STREET
LATHROP CA 95330

Project No.: ###-#-##
Drawn By: DW
Checked By: GL

No.	Description	Date	By
1	PLAN CHECK #1 1ST REVIEW CYCLE	10-21-2020	
2	PLAN CHECK #2 ADDENDA 1	12-09-2020	

3RD SUBMITTAL - BLDG. DEPT. 12/09/2020

ENERGY COMPLIANCE

T24.02

REGISTERED PROFESSIONAL ENGINEER ALLEN LAYMAN No. M30029 MECHANICAL STATE OF CALIFORNIA

neXus engineering
Consulting Mechanical Engineers
1400 Lone Palm Ave, Suite A
Modesto, CA 95351
Tel: 209.572.7399 Fax: 209.236.1579
www.nexusengineering.net
HVAC . Plumbing/Piping . Fire Sprinklers
Process/Plant Engineering . Refrigeration

11/2/2020 \xbx\20140 - Lathrop Fire Station\20140 - Title 24.dwg, 12/9/2020 2:25:24 PM, DWG To PDF.pc3

STATE OF CALIFORNIA
Domestic Water Heating System
NRCC-PLB-E — CALIFORNIA ENERGY COMMISSION

CERTIFICATE OF COMPLIANCE			NRCC-PLB-E
Project Name:	Fire Station 31 Upgrades	Report Page:	(Page 1 of 4)
Project Address:	800 J Street	Date Prepared:	11/2/2020

This document is used to demonstrate compliance for nonresidential occupancies with requirements in §110.1, §110.3, §120.3, and §140.5, and with requirements in §141.0 for additions and alterations, for domestic water heating scopes using the prescriptive path. For high-rise residential and hotel/motel occupancies compliance is demonstrated with requirements in §110.1, §110.3, §120.3, §150.0 and §150.1(c)8, and with requirements §150.2 for additions.

A. GENERAL INFORMATION

01	Project Location (city)	Lathrop	02	Climate Zone	12
03	Occupancy Types Within Project (select all that apply):				
☒ Nonresidential	☐ High-Rise Residential	☐ Hotel/Motel			
☐ State Building	☐ Healthcare Facility	☐ Other (Write In)			

B. PROJECT SCOPE

This table includes domestic water heating systems that are within the scope of the permit application and are demonstrating compliance using the prescriptive paths outlined in §140.5, §150.1(c)8, and §141.0(a), or §141.0(b)2N for additions or alterations. Solar water heating systems are documented on the NRCC-SRA compliance document. Combined hydronic water heating systems are documented on the NRCC-MCH compliance document.

01	02	03		
My project consists of (check all that apply):	System Type[1,2]	System Components		
☐ New system (DHW system being installed for the first time in newly constructed building)		☐ Equipment	☐ Distribution	☐ Controls
☐ System Alteration (equipment, distribution or controls)		☐ Equipment	☐ Distribution	☐ Controls

[1] *FOOTNOTES: Point of use water heaters, or other non-central systems used to serve nonresidential spaces, are considered individual systems.*

[2] *Dwelling units refers to hotel/motel guest rooms and units in a high-rise residential occupancy.*

Registration Number: — Registration Date/Time: — Registration Provider: Energysoft

CA Building Energy Efficiency Standards - 2019 Nonresidential Compliance — Report Version: 2019.1.003 Schema Version: rev 20190401 — Report Generated: 2020-11-02 13:57:53

STATE OF CALIFORNIA
Domestic Water Heating System
NRCC-PLB-E — CALIFORNIA ENERGY COMMISSION

CERTIFICATE OF COMPLIANCE			NRCC-PLB-E
Project Name:	Fire Station 31 Upgrades	Report Page:	(Page 2 of 4)
Project Address:	800 J Street	Date Prepared:	11/2/2020

C. COMPLIANCE RESULTS

Table C will indicate if the project data input into the compliance document is compliant with water heating requirements. If this table says "DOES NOT COMPLY" or "COMPLIES with Exceptional Conditions" refer to Table D. or the table indicated as not compliant for guidance.

01	02	03	04
Domestic Hot Water Equipment	Distribution Systems	Controls	Compliance Results
Table F	Table G	Table H	
	Yes		COMPLIES

D. EXCEPTIONAL CONDITIONS

This table is auto-filled with uneditable comments because of selections made or data entered in tables throughout the form.

E. ADDITIONAL REMARKS

This table is includes remarks made by the permit applicant to the Authority Having Jurisdiction.

F. DOMESTIC HOT WATER EQUIPMENT

This section does not apply to this project.

G. DOMESTIC HOT WATER DISTRIBUTION SYSTEM

This section does not apply to this project.

H. DOMESTIC HOT WATER CONTROLS

This section does not apply to this project.

Registration Number: — Registration Date/Time: — Registration Provider: Energysoft

CA Building Energy Efficiency Standards - 2019 Nonresidential Compliance — Report Version: 2019.1.003 Schema Version: rev 20190401 — Report Generated: 2020-11-02 13:57:53

STATE OF CALIFORNIA
Domestic Water Heating System
NRCC-PLB-E — CALIFORNIA ENERGY COMMISSION

CERTIFICATE OF COMPLIANCE			NRCC-PLB-E
Project Name:	Fire Station 31 Upgrades	Report Page:	(Page 3 of 4)
Project Address:	800 J Street	Date Prepared:	11/2/2020

I. DECLARATION OF REQUIRED CERTIFICATES OF INSTALLATION

Selections have been made based on information provided in this document. If any selection have been changed by permit applicant, an explanation should be included in Table E. Additional Remarks. These documents must be provided to the building inspector during construction and can be found online at https://www.energy.ca.gov/title24/2019standards/2019_compliance_documents/Nonresidential_Documents/NRCI/

Yes	No	Form/Title	Field Inspector Pass	Field Inspector Fail
●	○	NRCI-PLB-01-E - Must be submitted for all buildings	☐	☐
○	●	NRCI-PLB-02-E - Must be submitted for high-rise residential and hotel/motel central hot water distribution systems to be recognized for compliance.	☐	☐
○	●	NRCI-PLB-03-E - Must be submitted for high-rise residential and hotel/motel single dwelling unit hot water distribution systems to be recognized for compliance.	☐	☐

J.DECLARATION OF REQUIRED CERTIFICATES OF ACCEPTANCE

There are no Certificates of Acceptance applicable to service water heating requirements.

K. DECLARATION OF REQUIRED CERTIFICATES OF VERIFICATION

Selections have been made based on information provided in this document. If any selection have been changed by permit applicant, an explanation should be included in Table E. Additional Remarks. These documents must be completed by a HERS Rater and provided to the building inspector during construction. The final documents must be created by a HERS Providers registry, but drafts can be found online at https://www.energy.ca.gov/title24/2019standards/2019_compliance_documents/Nonresidential_Documents/NRCI/

Yes	No	Form/Title	Field Inspector Pass	Field Inspector Fail
○	●	NRCV-PLB-21-H High-rise Residential Central Hot Water Distribution HERS Verification	☐	☐
○	●	NRCV-PLB-22-H High-rise Residential Individual Dwelling Unit Hot Water Distribution HERS Verification	☐	☐

Registration Number: — Registration Date/Time: — Registration Provider: Energysoft

CA Building Energy Efficiency Standards - 2019 Nonresidential Compliance — Report Version: 2019.1.003 Schema Version: rev 20190401 — Report Generated: 2020-11-02 13:57:53

STATE OF CALIFORNIA
Domestic Water Heating System
NRCC-PLB-E — CALIFORNIA ENERGY COMMISSION

CERTIFICATE OF COMPLIANCE			NRCC-PLB-E
Project Name:	Fire Station 31 Upgrades	Report Page:	(Page 4 of 4)
Project Address:	800 J Street	Date Prepared:	11/2/2020

DOCUMENTATION AUTHOR'S DECLARATION STATEMENT

I certify that this Certificate of Compliance documentation is accurate and complete.

Documentation Author Name:	Documentation Author Signature:
Company: Nexus Engineering Inc.	Signature Date: 2020-11-02
Address:	CEA/ HERS Certification Identification (if applicable):
City/State/Zip:	Phone:

RESPONSIBLE PERSON'S DECLARATION STATEMENT

I certify the following under penalty of perjury, under the laws of the State of California:

1. The information provided on this Certificate of Compliance is true and correct.
2. I am eligible under Division 3 of the Business and Professions Code to accept responsibility for the building design or system design identified on this Certificate of Compliance (responsible designer)
3. The energy features and performance specifications, materials, components, and manufactured devices for the building design or system design identified on this Certificate of Compliance conform to the requirements of Title 24, Part 1 and Part 6 of the California Code of Regulations.
4. The building design features or system design features identified on this Certificate of Compliance are consistent with the information provided on other applicable compliance documents, worksheets, calculations, plans and specifications submitted to the enforcement agency for approval with this building permit application.
5. I will ensure that a completed signed copy of this Certificate of Compliance shall be made available with the building permit(s) issued for the building, and made available to the enforcement agency for all applicable inspections. I understand that a completed signed copy of this Certificate of Compliance is required to be included with the documentation the builder provides to the building owner at occupancy.

Responsible Designer Name: Allen Layman	Responsible Designer Signature:
Company: Nexus Engineering	Date Signed: 2020-11-02
Address: 1400 Lone Palm, Suite A	License: M30029
City/State/Zip: Modesto CA 95351	Phone: 209-572-7399

Registration Number: — Registration Date/Time: — Registration Provider: Energysoft

CA Building Energy Efficiency Standards - 2019 Nonresidential Compliance — Report Version: 2019.1.003 Schema Version: rev 20190401 — Report Generated: 2020-11-02 13:57:53

LDA DESIGNERS & ARCHITECTS

Architect:
LDA Partners, LLP
Designers & Architects
222 Central Court
Stockton, CA 95204
209.943.0405
www.ldapartners.com

LICENSED ARCHITECT — ERIC WILLIAM MOORE — C28388 — September 2021 — STATE OF CALIFORNIA

Client:
LATHROP-MANTECA FIRE PROTECTION DISTRICT
19001 SOMERSTON PARKWAY
LATHROP, CA 95330
209.941.5102

Project:
FIRE STATION 31 UPGRADES

800 J STREET
LATHROP CA 95330

Project No.: ###-#-##
Drawn By: DW
Checked By: GL

No.	Description	Date	By
1	PLAN CHECK #1 1ST REVIEW CYCLE	10-21-2020	
2	PLAN CHECK #2 ADDENDA 1	12-09-2020	

3RD SUBMITTAL - BLDG. DEPT.
12/09/2020

ENERGY COMPLIANCE

T24.03

LICENSED PROFESSIONAL ENGINEER — ALLEN LAYMAN — M30029 — 12 — MECHANICAL — STATE OF CALIFORNIA

neXus engineering
Consulting Mechanical Engineers
1400 Lone Palm Ave, Suite A
Modesto, CA 95351
Tel: 209.572.7399 Fax: 209.236.1579
www.nexusengineering.net
HVAC . Plumbing/Piping . Fire Sprinklers
Process/Plant Engineering . Refrigeration

11/2/2020 Jobs\20140 - Lathrop Fire Station\20140 - Title 24.dwg, 12/9/2020 2:25:36 PM, DWG To PDF.pc3

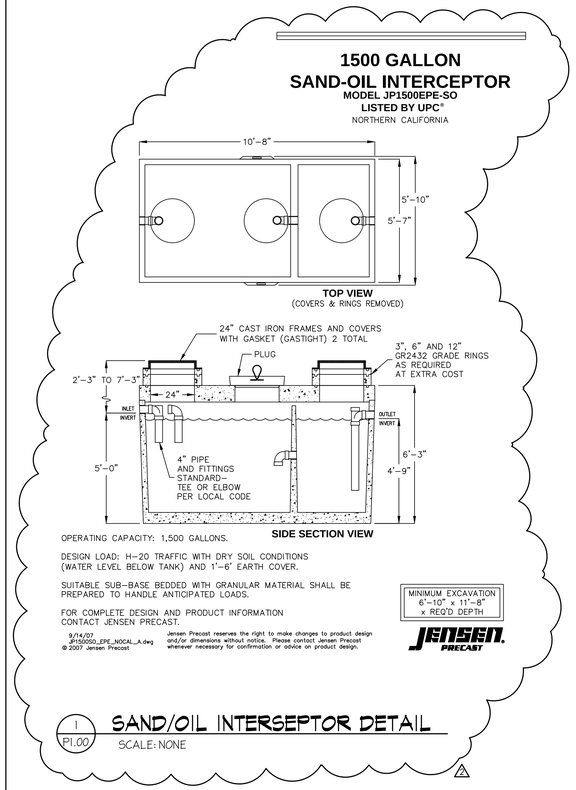

1 P1.00 SAND/OIL INTERSEPTOR DETAIL

SCALE: NONE

PLUMBING FIXTURE SCHEDULE

MARK	DESCRIPTION
WC-1	WATER CLOSET: FLOOR MOUNTED, ELONGATED BOWL, 1.28 GPF FLUSH VALVE, KOHLER "HIGHCLIFF" #K-96057-0. FLUSH VALVE: 1.28 GPF, MANUAL FLUSH, SLOAN #111-1.28. SEAT: MOUNT TOP OF SEAT @ 17" HIGH, OPEN FRONT, MAINLINE #"ML1055/ML1055SC. INSTALL PER ACCESSIBILITY REQUIREMENTS.
L-1	LAVATORY: WALL MOUNTED, VITREOUS CHINA, 22¾"x18¾", 4" CENTERS, KOHLER "KINGSTON" #K-2005-0. FAUCET: POLISHED CHROME, 0.5 GPM, 4" VANDAL PROOF WRISTBLADE HANDLES, CHICAGO #797-E70-317ABCP. MIXING VALVE: THERMOSTATIC MIXING VALVE, SET TO 110°F MAX., CHICAGO FAUCET #131-ABNF. PROVIDE WITH P-TRAP, WATER SUPPLY & ANGLE STOPS. INSTALL PER ACCESSIBILITY REQUIREMENTS.
L-2	LAVATORY: DROP-IN, VITREOUS CHINA, 22¾"x18", 4" CENTERS, KOHLER "MEMOIRS" #K-2337-4. FAUCET: POLISHED CHROME, 0.5 GPM, 4" VANDAL PROOF WRISTBLADE HANDLES, CHICAGO #797-E70-317ABCP. MIXING VALVE: THERMOSTATIC MIXING VALVE, SET TO 110°F MAX., CHICAGO FAUCET #131-ABNF. CARRIER: CONCEALED ARM SYSTEM, JOSAM #17100. PROVIDE WITH P-TRAP, WATER SUPPLY & ANGLE STOPS. INSTALL PER ACCESSIBILITY REQUIREMENTS.
S-1	SINK: TOP MOUNT, 20 GA. STAINLESS STEEL, 25"x22"x8" SIZE, KOHLER "TOCCATA" #K-3345-3-NA. FAUCET: POLISHED CHROME, 2.2 GPM, VANDAL PROOF 4" WRISTBLADE HANDLES,CHICAGO #1100-317ABCP. INSTALL ½" GRID DRAIN, CHROME W/OVERFLOW, P-TRAP, WATER SUPPLY,ANGLE STOPS & INSULATED COVERS.
FD-1	FLOOR DRAIN: CAST IRON BODY, BOTTOM OUTLET, NICKEL BRONZE STRAINER. 2" NO-HUB OUTLET, ½" TRAP PRIMER CONNECTION, ZURN #Z415B-NH2.
TP-1	TRAP PRIMER: DIFFERENTIAL PRESSURE AUTOMATIC TYPE, CORROSION RESISTANT BRASS, INSTALL PER MANUFACTURER'S RECOMMENDATIONS, PROVIDE ACCESS PANEL, PPP #PR-500.
WHA-1	WATER HAMMER ARRESTOR: FLUID TYPE. TYPE 'K' COPPER BODY, MALE NPT CONNECTION, SIZE PER MFG. RECOMMENDATIONS. PPP 1-11 F.U.: #SC-500, 12-32 F.U.: #SC-7500. PROVIDE WITH ACCESS PANEL, SEE AP-1.
AP-1	WALL ACCESS PANEL: 16 GAUGE STEEL WITH STAINLESS STEEL FINISH, ACCESS DOOR MIN. 12"x12", CYLINDER LOCK WITH (2) KEYS, HINGED DOOR. ELMDOR "DW" SERIES -SS (SIZE - FIT TO SUIT)
MS-1	FLOOR MOUNTED MOP SINK: MOLDED-STONE MOP SERVICE BASIN, 3" DRAIN, FLORESTONE #97 FAUCET: WALL MOUNTED, 8" CENTERS, RIGID SPOUT WITH PAIL HOOK AND PIPE SUPPORT, SPEAKMAN #MR-371 MOP HANGER SPEAKMAN #MR-372, HOSE AND HOSE BRACKET SPEAKMAN #MR-370, STAINLESS STEEL RIM GUARD SPEAKMAN #MR-373.
(E)WH-1	EXISTING GAS WATER HEATER: 74 GAL TANK, LOW NOX, GLASS LINED TANK, FOAM INSULATION PROTECTED BY HEAVY GAUGE STEEL JACKET, 75,100 BTU/H INPUT, A.O. SMITH #BT-80.
CP-1	CIRCULATION PUMP: BRONZE BODY, POLYPROPYLENE IMPELLER, CERAMIC SHAFT, ¾" FLANGED CONNECTIONS, 0.5 GPM @ 8' HD, 120V/1PH, 1/40 HP, OP.WT. 3.6 lbs. B&G #NBF-12F/LW. PROVIDE WITH AUTOMATIC TIMER KIT. PROVIDE WITH AQUASTAT TO TURN ON CIRCULATOR AT 100 DEG. F., AND TURN OFF CIRCULATOR @ 120 DEG. F.
ET-1	EXPANSION TANK: 2.1 GAL VOLUME, 0.43 GAL MAX ACCEPTANCE @ 40 PSI, ASME RATED AMTROL THERM-X-TROL #ST-5C
SHR-1	SHOWER: ACCESSIBLE, SITE-BUILT (SEE ARCH FOR SURROUND, SEAT & GRAB BARS), PROVIDE FIXED HEAD, HAND HELD HEAD, MIXING VALVE, DIVERTER VALVE & NECESSARY HARDWARE. INSTALL PER ACCESSIBILITY REQUIREMENTS, (REFER TO ARCH. PLANS.) 2 HANDHELD HEAD: 1.75 GPM @ 80 PSI, 59" HOSE, FIXED WALL BRACKET, CHROME FINISH, MOEN #3865-EP17. PROVIDE DROP ELL, MOEN #A725. FIXED HEAD: 1.5 GPM, CHROME FINISH, PROVIDE ARM AND ESCUTCHEON, KOHLER #K-11637-H. MIXING VALVE: ADJUSTABLE LIMIT STOPS, PRESSURE BALANCE CARTRIDGE WITH FULL SHUT OFF ABILITY, PROVIDE CHROME TRIM, KOHLER #K-8304-K-NA AND "BANCROFT" #CT10593-4. DIVERTER VALVE: LEVER HANDLE, CONFIGURE FOR 2 POSITIONS, PROVIDE CHROME FINISH TRIM, KOHLER #K-737-K AND "BANCROFT" #K-T10595-4.
AC-1	TWO-STAGE ELECTRIC DRIVEN RECIPROCATING AIR COMPRESSOR, 5 HP, 230V/1PH, 175 PSI MAX OPERATING PRESSURE, 80 GALLON VERTICAL TANK, 490# OPWT., ASME RATED, INGERSOLL RAND #T5AN5.
US-1	UTILITY SINK: HIGH STRENGTH ONE PIECE MOLDED CONSTRUCTION, MUSTEE #27F. FAUCET: POLISHED CHROME, 7" SWING SPOUT, LEVEL HANDLES, MUSTEE #83.600. INSTALL ½" GRID DRAIN, CHROME W/OVERFLOW, P-TRAP, WATER SUPPLY, ANGLE STOPS & INSULATED COVERS.
FS-1	FLOOR SINK: 12"x12"x6" DEEP CAST IRON BODY, ½ SLOTTED MEDIUM DUTY GRATE, PORCELAIN ENAMEL INTERIOR AND TOP, DOME STRAINER, NO-HUB 2" OUTLET, WATTS #FS-730.
FD-2	FLOOR DRAIN: CAST IRON BODY, BOTTOM OUTLET, NICKEL BRONZE STRAINER. 2" NO-HUB OUTLET, ½" TRAP PRIMER CONNECTION, ZURN #Z415B-NH2.
TD-1	TRENCH DRAIN: 6¾" WIDE REVEAL TRENCH DRAIN SYSTEM WITH HEAVY-DUTY FRAME ASSEMBLY, 80° CHANNELS WITH 0.75% SLOPE, ZURN #Z886-HD. 1

DOMESTIC WATER SIZING CALCULATION

WATER SIZING WORKSHEET PER 2019 CPC TABLE 610.3 AND 2019 CPC, APPENDIX A

			TABLE A-2 FIXTURE TYPE	MINIMUM BRANCH SIZE	QTY	FU	TOTAL
SOURCE DATA							
MIN. PRESSURE AVAILABLE:	50.0	PSI	BATHTUB/BATH-SHOWER COMB. (FILL)	1/2"	0	4.0	0.0
			BIDET	1/2"	0	1.0	0.0
DEMAND DATA			CLOTHES WASHER	1/2"	3	4.0	12.0
TOTAL FIXTURE UNITS:	44.0	F.U.	DENTAL UNIT, CUSPIDOR	1/2"	0		0.0
FIXTURE UNIT DEMAND:	48.0	GPM CHART A-2/3	DISHWASHER	3/4"	1	1.5	1.5
CONTINUOUS DEMAND:	0.0	GPM	ICE MAKER / DRINKING FOUNTAIN	1/2"	1	0.5	0.5
TOTAL DEMAND:	48.0	GPM	HOSE BIBB	1/2"	1	2.5	2.5
			HOSE BIBB (EACH ADDITIONAL)	1/2"	4	1.0	4.0
SOURCE TO PUMP			LAVATORY	1/2"	2	1.0	2.0
DISTANCE:	0	FT	LAWN SPRINKLER, EACH HEAD		0	1.0	0.0
ELEVATION CHANGE:	0	FT	SINK, BAR TYPE	1/2"	0	2.0	0.0
FRICTION LOSS:	0.0	PSI	SINK, CLINIC FAUCET	1/2"	0	1.5	0.0
TOTAL LOSS:	0.0	PSI	SINK, CLINIC FLUSHOMETER VALVE	1/2"	0	1.5	0.0
			SINK, LAUNDRY	1/2"	0	1.5	0.0
			SINK, KITCHEN DOMESTIC	1/2"	1	1.5	1.5
BOOSTER PUMP/ BUILDING SYSTEM	0	PSI	SINK, SERVICE OR MOP BASIN	1/2"	2	3.0	6.0
			SINK, WASHUP (EACH SET OF FAUCETS)	1/2"	0		0.0
TOTAL DEVELOPED LENGTH TO			SHOWER	1/2"	2	2.0	4.0
			EYE WASH	1/2"	0	5.5	0.0
MOST REMOTE FIXTURE:	150	FT	URINAL, 1.0 GPF	1"	0	4.0	0.0
ELEVATION TO HIGHEST FIXTURE:	4	FT	URINAL, >1.0 GPF	3/4"	0	4.0	0.0
METER (METER SIZE)/(-1/2"):	5	PSI TABLE A-1	URINAL, FLUSH TANK	1/2"	0	2.0	0.0
BACKFLOW PREVENTER:	12	PSI	WASHFOUNTAIN, CIRCULAR SPRAY	3/4"	0		0.0
SOFTENER:	0	PSI	WATER CLOSET, 1.6 GPF GRAVITY TANK	1/2"	0	2.5	0.0
FILTER:	0	PSI	WATER CLOSET, 1.6 GPF FLUSHOMETER TANK	3/4"	0	2.5	0.0
MISC:	0	PSI	WATER CLOSET, 1.6 GPF FLUSHOMETER VALVE	1-1/4"	2	5.0	10.0
TOTAL BUILDING SYSTEM LOSS:	18.7	PSI	WATER CLOSET > 1.6 GPF GRAVITY TANK	3/4"	0	5.5	0.0
			WATER CLOSET > 1.6 GPF FLUSHOMETER VALVE	1"	0	7.0	0.0
						TOTAL:	44.0
FLUSH VALVE SYSTEM ('25 PSI RESID.):	4.2	PSI/100'					
BUILDING SUPPLY PIPE SIZE:	2"	INCHES					

COLD WATER (FLUSH VALVE) (MAX. 8FT/SEC.)

SIZE	DP/100'	GPM	F.U.	VEL(FPS)
1/2"	4.0	2.2	-	2.8
3/4"	4.0	5.8	-	3.7
1"	4.0	12.0	-	4.5
1 1/4"	4.0	21.0	-	5.2
1 1/2"	4.0	33.0	16	5.9
2"	4.0	67.0	95	7.2

COLD WATER (FLUSH TANK) (MAX. 5FT/SEC)

SIZE	DP/100'	GPM	F.U.	VEL(FPS)
1/2"	15.5	4.4	4	6.0
3/4"	14.5	12.0	16	7.8
1"	10.5	20.0	30	8.0
1 1/4"	7.9	29.5	51	8.0
1 1/2"	6.5	41.0	90	8.0
2"	4.6	72.0	236	8.0

DOMESTIC HOT WATER (MAX. 5FT/SEC.)

SIZE	DP/100'	GPM	F.U.	VEL(FPS)
1/2"	10.0	3.5	3	4.9
3/4"	6.5	7.5	8	5.0
1"	4.7	13.5	18	5.0
1 1/4"	3.6	19.0	28	5.0
1 1/2"	3.0	28.0	49	5.0
2"	2.2	48.0	119	5.0

PLUMBING GENERAL NOTES

1. SCOPE:
   DEMOLISH AND REMODEL PLUMBING SYSTEM AS GENERALLY DELINEATED ON THE PLUMBING DRAWINGS, INCLUDING SERVICE PIPING AND FINAL CONNECTIONS TO EQUIPMENT FURNISHED AND INSTALLED BY OTHER TRADES AS MAY BE SHOWN ON THE ARCHITECTURAL, ELECTRICAL OR OTHER DRAWINGS OF THE CONTRACT DOCUMENTS.
2. CALIFORNIA CODE OF REGULATIONS:
   ALL HOT WATER DISTRIBUTION AND CIRCULATION LINES SHALL BE INSULATED IN ACCORDANCE WITH SECTION 120.3 OF THE CALIFORNIA CODE OF REGULATIONS, TITLE 24, PART 6, SUBCHAPTER 3.
3. ALL PLUMBING FIXTURES & EQUIPMENT USED (E.G. SHOWERHEADS, LAVATORY FAUCETS, SINK FAUCET AND WATER HEATERS) SHALL HAVE BEEN CERTIFIED TO THE CALIFORNIA ENERGY COMMISSION BY ITS MANUFACTURER TO COMPLY WITH THE EFFICIENCY STANDARDS FOR SUCH APPLIANCES.
4. CODES:
   ALL WORK, MATERIAL, AND EQUIPMENT SHALL BE FURNISHED AND INSTALLED IN COMPLIANCE WITH THE FOLLOWING CODES AS ADOPTED AND AMENDED BY THE INSPECTING AUTHORITY HAVING JURISDICTION. NOTHING IN THESE PLANS IS TO BE CONSTRUED TO PERMIT THE INSTALLATION OF WORK, MATERIAL OR EQUIPMENT NOT CONFORMING TO THESE OR OTHER CODES APPLICABLE TO THIS PROJECT.
   A. 2019 CALIFORNIA ADMINISTRATIVE CODE (CAC) PART 1, TITLE 24, CALIFORNIA CODE OF REGULATIONS (CCR)
   B. 2019 CALIFORNIA BUILDING CODE (CBC) PART 2, TITLE 24, CCR BASED ON THE 2018 INTERNATIONAL BUILDING CODE (IBC)
   C. 2019 CALIFORNIA ELECTRICAL CODE (CEC) PART 3, TITLE 24, CCR BASED ON THE 2017 NATIONAL ELECTRICAL CODE (NEC)
   D. 2019 CALIFORNIA MECHANICAL CODE (CMC) PART 4, TITLE 24, CCR BASED ON THE 2018 UNIFORM MECHANICAL CODE (UMC)
   E. 2019 CALIFORNIA PLUMBING CODE (CPC) PART 5, TITLE 24, CCR BASED ON THE 2018 UNIFORM PLUMBING CODE (UPC)
   F. 2019 CALIFORNIA ENERGY CODE (CEC) PART 6, TITLE 24 CCR.
   G. 2019 CALIFORNIA FIRE CODE (CFC) PART 9, TITLE 24, CCR BASED ON THE 2018 INTERNATIONAL FIRE CODE (IFC)
   H. 2019 CALIFORNIA GREEN BUILDING STANDARDS (CGBSC) PART 11, TITLE 24, CCR
5. WORKMANSHIP:
   ALL WORK SHALL BE DONE IN A NEAT AND WORKMANLIKE MANNER ACCORDING TO THE BEST TRADE PRACTICE BY THOSE SKILLED IN THE PARTICULAR TRADE. EQUIPMENT, FIXTURES, PIPING, ETC., SHALL BE PLUMB, LEVEL, SQUARE AND/OR CENTERED, ETC. EQUIPMENT TO BE INSTALLED IN STRICT COMPLIANCE WITH MANUFACTURER'S RECOMMENDATIONS.
6. EXISTING INFORMATION:
   LOCATION, SIZE, ELEVATION, MATERIAL, ETC., OF EXISTING UTILITIES IS PROVIDED FROM SOURCES DEEMED RELIABLE BUT IS NOT GUARANTEED. THE CONTRACTOR SHALL FIELD VERIFY ALL DATA BEFORE PROCEEDING WITH ANY WORK. NO EXTRA COST WILL BE ALLOWED FOR SERVICES NOT AS SHOWN.
7. PERMITS AND UTILITY SERVICE FEES:
   THE PLUMBING CONTRACTOR SHALL ARRANGE AND PAY FOR ALL PERMITS, INSPECTIONS, AND SERVICE CHARGES REQUIRED FOR THE INSTALLATION OF THE WORK.
8. ACCURACY:
   PLANS ARE DIAGRAMMATIC. THE CONTRACTOR SHALL CONFIRM ALL DIMENSIONS AND LOCATION OF WALLS, PARTITIONS, FIXTURES, ETC., AGAINST DESIGN PLANS FOR CONSISTENCY AND ACCURACY PRIOR TO COMMENCING WORK.
9. PROVIDE AND INSTALL CONDENSATE DRAIN WITH TRAP AT EACH A/C UNIT PER THE UPC, AT LOCATIONS SHOWN ON DRAWINGS. COORDINATE WITH MECHANICAL CONTRACTOR.
10. PROVIDE AND INSTALL ACCESS PANELS FOR ALL SHUT-OFF, ISOLATION, OR BRANCH VALVES NOT READILY ACCESSIBLE. ACCESS PANELS SHALL BE PROVIDED AND INSTALLED AT ALL TRAP PRIMER VALVES AND WATER HAMMER ARRESTORS.
11. ALL PIPING PASSING THROUGH CONCRETE FLOORS SHALL BE SLEEVED TO PROTECT PIPING AGAINST BREAKAGE.
12. HORIZONTAL DRAINAGE PIPING LESS THAN 4" IN DIAMETER SHALL BE SLOPED AT A MINIMUM OF 1/4" PER FOOT (2%) DRAINAGE PIPING 4" AND LARGER SHALL BE SLOPED AT A MINIMUM OF 1/4" PER FOOT (2%) UNLESS OTHERWISE APPROVED BY THE AHJ.
13. ALL PLUMBING FIXTURES AND PIPING SHALL BE LISTED BY AN APPROVED LISTING AND TESTING AGENCY AND PROPERLY LABELED.

FIXTURE CONNECTION SCHEDULE

FIXTURE	SYM	WASTE BRANCH	WASTE OUTLET	TRAP	VENT	COLD WATER BRANCH	COLD WATER OUTLET	HOT WATER BRANCH	HOT WATER OUTLET
WATER CLOSET (F.V.)	WC	4"	3"	--	2"	1½"	1¼"	--	--
URINAL (F.V.)	UR	2"	2"	INT	2"	1"	¾"	--	--
LAVATORY	L	2"	1½"	1½"	½"	½"	½"	½"	½"
SINK	S	2"	1½"	1½"	½"	¾"	½"	¾"	½"
MOP SINK	MS	3"	3"	2"	¾"	¾"	¾"	¾"	¾"
SHOWER	SHR	2"	2"	1½"	1½"	¾"	½"	¾"	½"
HOSE BIBB	HB	--	--	--	--	¾"	¾"	--	--
FLOOR DRAIN	FD	2"	2"	2"	1½"	--	--	--	--
TRAP PRIMER	TP	--	--	--	--	¾"	¾"	--	--

DEMOLITION NOTES

1. THE CONTRACTOR SHALL VISIT THE PROJECT SITE AND MAKE HIMSELF AWARE OF ALL EXISTING CONDITIONS WHICH CAN BE OBSERVED. ADDITIONAL COSTS WILL NOT BE ALLOWED FOR CORRECTION OF ITEMS WHICH CAN BE OBSERVED AND THEREFORE SHOULD BE INCLUDED IN HIS BID. THE CONTRACTOR IS RESPONSIBLE FOR ALL DEMOLITION WORK REQUIRED TO COMPLETE THIS PROPOSED PROJECT.
2. THE NOTES AND DRAWINGS CONTAINED ON THIS SHEET DESCRIBE IN A GENERAL SENSE THE EXTENT OF ITEMS TO BE MODIFIED, REMOVED OR INSTALLED. THIS DESCRIPTION DOES NOT NECESSARILY INCLUDE A DESCRIPTION OF ITEMS TO BE REPAIRED OR REFINISHED AS A RESULT OF THIS REMOVAL OR MODIFICATION. IN THE ABSENCE OF ANY SPECIFIC DIRECTION, THE CONTRACTOR SHALL REPAIR THE AFFECTED AREA(S) TO A CONDITION EQUAL TO THE ADJACENT AREA(S) AND/OR SIMILAR EXISTING CONDITIONS ON PROJECT.
3. THE CONTRACTOR SHALL PROVIDE DUST AND DEBRIS CONTROL THROUGHOUT THE PROJECT'S CONSTRUCTION. THE CONTRACTOR SHALL COORDINATE HIS WORK WITH THE BUILDING OWNER TO PROVIDE THE LEAST INTERRUPTION OF EXISTING BUILDING OPERATIONS. COORDINATE WITH THE OWNER THE LOCATION OF ON-SITE STORAGE AND STAGING.
4. NOT ALL REQUIRED PATCHING AND/OR REPAIRS ARE SPECIFICALLY NOTED ON THIS PLAN.
5. COORDINATE DEMOLITION WORK WITH NEW PROPOSED FLOOR PLANS.
6. CONTRACTOR SHALL DISCARD AND DISPOSE OF ALL DEMOLISHED ITEMS.
7. EXISTING PIPING AND ELECTRICAL OR COMMUNICATION CONDUITS WHICH INTERFERE WITH THE WORK SHALL BE RE-ROUTED BY THE CONTRACTOR.

PLUMBING MATERIAL SPECIFICATIONS

A. DWV
   PIPE: ABS SCH. 40 PLASTIC DRAIN, WASTE AND VENT, ASTM D2661-94A
   FITTINGS: ABS SCH. 40, ASTM D2661-94A

B. DOMESTIC WATER
   PIPE: COPPER TYPE L PER ASTM B88
   FITTINGS: WROUGHT COPPER PER ASME B16.22
   INSULATION: INSULATE HOT WATER AND HOT WATER RETURNS AS FOLLOWS:
   PIPE ≤ 3/4" = 1" FIBERGLASS INSULATION AND ALL-SERVICE-JACKET
   PIPE ≥ 1" & < 2" = 1-1/2" FIBERGLASS INSULATION AND ALL-SERVICE-JACKET
   PIPE ≥ 2" = 2" FIBERGLASS INSULATION AND ALL-SERVICE-JACKET

C. CONDENSATE DRAIN
   PIPE: COPPER TYPE L PER ASTM B-88
   FITTINGS: WROUGHT COPPER PER ANSI 16.22

D. NATURAL GAS (ABOVE GRADE - 2½" & SMALLER)
   PIPE: SCH 40 BLACK STEEL, THREADED PER ASTM A-53
   FITTINGS: SCREWED MALLEABLE IRON PER ANSI B-16.3

E. NATURAL GAS (ABOVE GRADE - 3" & LARGER)
   PIPE: SCH 40 BLACK STEEL PER ASTM A-53
   FITTINGS: CARBON STEEL BUTT WELD PER ASTM A234

PLUMBING LEGEND

SYMBOL	ABBREVIATION	DESCRIPTION
	SS	SOIL, WASTE OR SANITARY SEWER BELOW FLOOR
	GW	GREASE WASTE BELOW FLOOR
	V	VENT PIPING
	CW	COLD WATER
	HW (110°, 140°)	HOT WATER SUPPLY
	HWR	HOT WATER RETURN
	G	NATURAL GAS - LOW PRESSURE
	MPG	NATURAL GAS - MEDIUM PRESSURE (2 PSI)
	(E)	EXISTING TO BE REMOVED
D OR IW	D OR IW	DRAIN OR INDIRECT WASTE
CD	CD	CONDENSATE DRAIN
OCD	OCD	OVERFLOW CONDENSATE DRAIN
	SD, RWL	STORM DRAIN, RAINWATER LEADER
	OFL	RAINWATER OVERFLOW LEADER (STORM)
	AD, AP	ACCESS DOOR, ACCESS PANEL
	AC	AIR CHAMBER
	ANV	ANGLE VALVE
	AQ	AQUASTAT
	AD	AREA DRAIN
	AAV	AUTOMATIC AIR VENT
	BV	BALL VALVE
		BRANCH - TOP CONNECTION
		BRANCH - BOTTOM CONNECTION
		BRANCH - SIDE CONNECTION
	BFV	BUTTERFLY VALVE
	COP	CAP ON END OF PIPE
	CBV	CALIBRATED BALANCE VALVE
	CB, RD	CATCH BASIN, ROOF DRAIN
	CKV	CHECK VALVE
	CP	CIRCULATING PUMP
CO	CO	CLEANOUT PLUG
	CR	CONCENTRIC REDUCER
	DIA	DIAMETER
	ER	ECCENTRIC REDUCER
	FC	FLEXIBLE CONNECTOR
	FCO	FLOOR CLEANOUT
	FD	FLOOR DRAIN
FS	FS	FLOW SWITCH
	GCK	GAGE COCK
	GV	GATE VALVE
	GSCK, PC	GAS COCK, PLUG COCK
	GPR	GAS PRESSURE REGULATOR
	GL. V.	GLOBE VALVE
	GCO	GRADE CLEANOUT
	HB	HOSE BIBB
	AN	PIPE ANCHOR
	PG	PIPE GUIDE
	POC	POINT OF CONNECTION
	PRV	PRESSURE REDUCING VALVE
	PG	PRESSURE GAUGE
OR T&P	RV or T&P	RELIEF VALVE OR TEMPERATURE & PRESSURE RELIEF VALVE
	SV	SOLENOID VALVE
	STR	STRAINER
	TH	THERMOMETER
TP	TP	TRAP PRIMER
	UN	UNION OR FLANGE
	VTR	VENT THRU ROOF
	WCO	WALL CLEANOUT

SHEET INDEX

SHEET NO.	DESCRIPTION
P1.00	PLUMBING - LEGEND, NOTES AND SCHEDULES
P1.01	PLUMBING - GREEN BUILDING CODE NOTES
P2.00	PLUMBING - DEMOLITION FLOOR PLAN
P2.01	PLUMBING - DEMOLITION ROOF PLAN
P3.00	PLUMBING - FLOOR PLAN
P3.01	PLUMBING - ROOF PLAN
P4.00	PLUMBING - DETAILS

LDA DESIGNERS & ARCHITECTS

Architect:
LDA Partners, LLP
Designers & Architects
222 Central Court
Stockton, CA 95204
209.943.0405
www.ldapartners.com

LICENSED ARCHITECT ERIC WILLIAM MOORE C28388 September 2021 STATE OF CALIFORNIA

Client:
LATHROP-MANTECA FIRE PROTECTION DISTRICT
19001 SOMERSTON PARKWAY
LATHROP, CA 95330
209.941.5102

Project:
FIRE STATION 31 UPGRADES
800 J STREET
LATHROP CA 95330

Project No.: ###-#-##
Drawn By: DW
Checked By: GL

No.	Description	Date	By
1	PLAN CHECK #1 1ST REVIEW CYCLE	10-21-2020	
2	PLAN CHECK #2 ADDENDA 1	12-09-2020	

3RD SUBMITTAL - BLDG. DEPT. 12/09/2020

PLUMBING - LEGEND, NOTES & SCHEDULES

P1.00

REGISTERED PROFESSIONAL ENGINEER LICENSED MECHANICAL STATE OF CALIFORNIA

neXus engineering
Consulting Mechanical Engineers
1400 Lone Palm Ave, Suite A
Modesto, CA 95351
Tel: 209.572.7399 Fax: 209.236.1579
www.nexusengineering.net
HVAC . Plumbing/Piping . Fire Sprinklers
Process/Plant Engineering . Refrigeration

I:\2020 Jobs\20140 - Lathrop Fire Station\20140 - Plumbing.dwg, 12/9/2020 2:25:41 PM, DWG To PDF.pc3

PLUMBING GREEN BUILDING CODE NOTES

REQUIRED		REQUIRED	
	SECTION 5.301 GENERAL 5.301.1 SCOPE. THE PROVISIONS OF THIS CHAPTER SHALL ESTABLISH THE MEANS OF CONSERVING WATER USE INDOORS, OUTDOORS AND IN WASTEWATER CONVEYANCE.		**SECTION 5.303 INDOOR WATER USE** 5.303.1 METERS. SEPARATE SUBMETERS OR METERING DEVICES SHALL BE INSTALLED FOR THE USES DESCRIBED IN SECTIONS 503.1.1 AND 503.1.2.
	SECTION 5.302 DEFINITIONS 5.302.1 DEFINITIONS. THE FOLLOWING TERMS ARE DEFINED IN CHAPTER 2 (AND ARE INCLUDED HERE FOR REFERENCE)		5.303.1.1 BUILDINGS IN EXCESS OF 50,000 SQUARE FEET. SEPARATE SUBMETERS SHALL BE INSTALLED AS FOLLOWS:
	EVAPOTRANSPIRATION ADJUSTMENT FACTOR (ETAF) (DSA-SS). AN ADJUSTMENT FACTOR WHEN APPLIED TO REFERENCE EVAPOTRANSPIRATION THAT ADJUSTS FOR PLANT FACTORS AND IRRIGATION EFFICIENCY, WHICH AE TWO MAJOR INFLUENCES ON THE AMOUNT OF WATER THAT NEEDS TO BE APPLIED TO THE LANDSCAPE.		1. FOR EACH INDIVIDUAL LEASED, RENTED OR OTHER TENANT SPACE WITHIN THE BUILDING PROJECTED TO CONSUME MORE THAN 100 GAL/DAY (380 L/DAY), INCLUDING, BUT NOT LIMITED TO, SPACES USED FOR LAUNDRY OR CLEANERS, RESTAURANT OR FOOD SERVICE, MEDICAL OR DENTAL OFFICE, LABORATORY, OR BEAUTY SALON OR BARBER SHOP.
	FOOTPRINT AREA (DSA-SS). THE TOTAL AREA OF THE FURTHEST EXTERIOR WALL OF THE STRUCTURE PROJECTED TO NATURAL GRADE, NOT INCLUDING EXTERIOR AREAS SUCH AS STAIRS, COVERED WALKWAYS, PATIOS AND DECKS.		2. WHERE SEPARATE SUBMETERS FOR INDIVIDUAL BUILDING TENANTS ARE UNFEASIBLE, FOR WATER SUPPLIED TO THE FOLLOWING SUBSYSTEMS:
	METERING FAUCET. A SELF-CLOSING FAUCET THAT DISPENSES A SPECIFIC VOLUME OF WATER FOR EACH ACTUATION CYCLE. THE VOLUME OR CYCLE DURATION CAN BE FIXED OR ADJUSTABLE.		A. MAKEUP WATER FOR COOLING TOWERS WHERE FLOW THROUGH IS GREATER THAN 500 GPM (30 L/S). B. MAKEUP WATER FOR EVAPORATIVE COOLERS GREATER THAN 6 GPM (0.04 L/S). C. STEAM AND HOT WATER BOILERS WITH ENERGY INPUT MORE THAN 500,000 BTU/H (147 KW).
	GRAYWATER. PURSUANT TO HEALTH AND SAFETY CODE SECTION 17922.12, 'GRAYWATER' MEANS UNTREATED WASTEWATER THAT HAS NOT BEEN CONTAMINATED BY ANY TOILET DISCHARGE, HAS NOT BEEN AFFECTED BY INFECTIOUS, CONTAMINATED, OR UNHEALTHY BODILY WASTES, AND DOES NOT PRESENT A THREAT FROM CONTAMINATION BY UNHEALTHFUL PROCESSING, MANUFACTURING, OR OPERATING WASTES. 'GRAYWATER' INCLUDES, BUT IS NOT LIMITED TO WASTEWATER FROM BATHTUBS, SHOWERS, BATHROOM WASHBASINS, CLOTHES WASHING MACHINES AND LAUNDRY TUBS, BUT DOES NOT INCLUDE WASTE WATER FROM KITCHEN SINKS OR DISHWASHERS.		5.303.1.2 EXCESS CONSUMPTION. A SEPARATE SUBMETER OR METERING DEVICE SHALL BE PROVIDED FOR ANY TENANT WITHIN A NEW BUILDING OR WITHIN AN ADDITION THAT IS PROJECTED TO CONSUME MORE THAN 1,000 GAL/DAY.
	MODEL WATER EFFICIENT LANDSCAPE ORDINANCE (MWELO). THE CALIFORNIA ORDINANCE REGULATING LANDSCAPE DESIGN, INSTALLATION AND MAINTENANCE PRACTICES THAT WILL ENSURE COMMERCIAL, MULTIFAMILY AND OTHER DEVELOPER INSTALLED LANDSCAPES GREATER THAN 2500 SQUARE FEET MEET AN IRRIGATION WATER BUDGET DEVELOPED BASED ON LANDSCAPED AREA AND CLIMATOLOGICAL PARAMETERS.		5.303.3 WATER CONSERVING PLUMBING FIXTURES AND FITTINGS. PLUMBING FIXTURES (WATER CLOSETS AND URINALS) AND FITTINGS (FAUCETS AND SHOWERHEADS) SHALL COMPLY WITH THE FOLLOWING:
	MODEL WATER EFFICIENT LANDSCAPE ORDINANCE (MWELO). (HCD) THE CALIFORNIA MODEL ORDINANCE (CALIFORNIA CODE OF REGULATIONS, TITLE 23, DIVISION 2, CHAPTER 2.7), REGULATING LANDSCAPE DESIGN, INSTALLATION AND MAINTENANCE PRACTICES. LOCAL AGENCIES ARE REQUIRED TO ADOPT THE UPDATED MWELO, OR ADOPT A LOCAL ORDINANCE AT LEAST AS EFFECTIVE AS THE MWELO.	X	5.303.3.1 WATER CLOSETS. THE EFFECTIVE FLUSH VOLUME OF ALL WATER CLOSETS SHALL NOT EXCEED 1.28 GALLONS PER FLUSH. TANK-TYPE WATER CLOSETS SHALL BE CERTIFIED TO THE PERFORMANCE CRITERIA OF THE U.S. EPA WATERSENSE SPECIFICATION FOR TANK-TYPE TOILETS. NOTE: THE EFFECTIVE FLUSH VOLUME OF DUAL FLUSH TOILETS IS DEFINED AS THE COMPOSITE, AVERAGE FLUSH VOLUME OF TWO REDUCED FLUSHES AND ONE FULL FLUSH.
	POTABLE WATER. WATER THAT IS DRINKABLE AND MEETS THE U.S. ENVIRONMENTAL PROTECTION AGENCY (EPA) DRINKING WATER STANDARDS. SEE DEFINITION IN THE CALIFORNIA PLUMBING CODE, PART 5.	X	5.303.3.2 URINALS. THE EFFECTIVE FLUSH VOLUME OF URINALS SHALL NOT EXCEED 0.5 GALLONS PER FLUSH.
	POTABLE WATER. (HCD) WATER THAT IS SATISFACTORY FOR DRINKING, CULINARY, AND DOMESTIC PUROSES, AND MEETS THE U.S. ENVIRONMENTAL PROTECTION AGENCY (EPA) DRINKING WATER STANDARDS AND THE REQUIREMENTS OF THE HEALTH AUTHORITY HAVING JURISDICTION.		5.303.3.3 SHOWERHEADS. 5.303.3.3.1 SINGLE SHOWERHEAD. SHOWERHEADS SHALL HAVE A MAXIMUM FLOW RATE OF NOT MORE THAN 2.0 GALLONS PER MINUTE AT 80 PSI. SHOWERHEADS SHALL BE CERTIFIED TO THE PERFORMANCE CRITERIA OF THE U.S. EPA WATERSENSE SPECIFICATION FOR SHOWERHEADS.
	RECYCLED WATER. WATER WHICH, AS A RESULT OF TREATMENT OF WASTE, IS SUITABLE FOR A DIRECT BENEFICIAL USE OR A CONTROLLED USE THAT WOULD NOT OTHERWISE OCCUR (WATER CODE SECTION 13050 (N)). SIMPLY PUT, RECYCLED WATER IS WATER TREATED TO REMOVE WASTE MATTER ATTAINING A QUALITY THAT IS SUITABLE TO USE THE WATER AGAIN.		5.303.3.3.2 MULTIPLE SHOWERHEADS SERVING ONE SHOWER. WHEN A SHOWER IS SERVED BY MORE THAN ONE SHOWERHEAD, THE COMBINED FLOW RATE OF ALL THE SHOWERHEADS AND/OR OTHER SHOWER OUTLETS CONTROLLED BY A SINGLE VALVE SHALL NOT EXCEED 2.0 GALLONS PER MINUTE AT 80 PSI, OR THE SHOWER SHALL BE DESIGNED TO ALLOW ONLY ONE SHOWER OUTLET TO BE IN OPERATION AT A TIME.
	SUBMETER. A METER INSTALLED SUBORDINATE TO A SITE METER. USUALLY USED TO MEASURE WATER INTENDED FOR ONE PURPOSE, SUCH AS LANDSCAPE IRRIGATION. FOR THE PURPOSES OF CALGREEN, A DEDICATED METER MAY BE CONSIDERED A SUBMETER.		NOTE: A HAND-HELD SHOWER SHALL BE CONSIDERED A SHOWERHEAD.
	WATER BUDGET. IS THE ESTIMATED TOTAL LANDSCAPE IRRIGATION WATER USE WHICH SHALL NOT EXCEED THE MAXIMUM APPLIED WATER ALLOWANCE CALCULATED IN ACCORDANCE WITH THE DEPARTMENT OF WATER RESOURCES MODEL EFFICIENT LANDSCAPE ORDINANCE (MWELO).	X	5.303.3.4 FAUCETS AND FOUNTAINS. 5.303.3.4.1 NONRESIDENTIAL LAVATORY FAUCETS. LAVATORY FAUCETS SHALL HAVE A MAXIMUM FLOW RATE OF NOT MORE THAN 0.5 GALLONS PER MINUTE AT 60 PSI. 5.303.3.4.2 KITCHEN FAUCETS. KITCHEN FAUCETS SHALL HAVE A MAXIMUM FLOW RATE OF NOT MORE THAN 1.8 GALLONS PER MINUTE AT 60 PSI. KITCHEN FAUCETS MAY TEMPORARILY INCREASE THE FLOW ABOVE THE MAXIMUM RATE, BUT NOT TO EXCEED 2.2 GALLONS PER MINUTE AT 60 PSI, AND MUST DEFAULT TO A MAXIMUM FLOW RATE OF 1.8 GALLONS PER MINUTE AT 60 PSI. 5.303.3.4.3 WASH FOUNTAINS. WASH FOUNTAINS SHALL HAVE A MAXIMUM FLOW RATE OF NOT MORE THAN 1.8 GALLONS PER MINUTE/20 (RIM SPACE (INCHES) AT 60 PSI). 5.303.3.4.4 METERING FAUCETS. METERING FAUCETS SHALL NOT DELIVER MORE THAN 0.20 GALLONS PER CYCLE. 5.303.3.4.5 METERING FAUCETS FOR WASH FOUNTAINS. METERING FAUCETS FOR WASH FOUNTAINS SHALL HAVE A MAXIMUM FLOW RATE OF NOT MORE THAN 0.20 GALLONS PER MINUTE/20 (RIM SPACE (INCHES) AT 60 PSI). NOTE: WHERE COMPLYING FAUCETS ARE UNAVAILABLE, AERATORS OR OTHER MEANS MAY BE USED TO ACHIEVE REDUCTION.
			5.303.4 COMMERCIAL KITCHEN EQUIPMENT.
			5.303.4.1 FOOD WASTE DISPOSERS. DISPOSERS SHALL EITHER MODULATE THE USE OF WATER TO NO MORE THAN 1 GPM WHEN THE DISPOSER IS NOT IN USE (NOT ACTIVELY GRINDING FOOD WASTE/NO-LOAD) OR SHALL AUTOMATICALLY SHUT OFF AFTER NO MORE THAN 10 MINUTES OF INACTIVITY. DISPOSERS SHALL USE NO MORE THAN 8 GPM OF WATER. NOTE: THIS CODE SECTION DOES NOT AFFECT LOCAL JURISDICTION AUTHORITY TO PROHIBIT OR REQUIRE DISPOSER INSTALLATION.
			5.303.5 AREAS OF ADDITION OR ALTERATION. FOR THOSE OCCUPANCIES WITHIN THE AUTHORITY OF THE CALIFORNIA BUILDING STANDARDS COMMISSION AS SPECIFIED IN SECTION 103, THE PROVISIONS OF SECTION 5.303.3 AND 5.303.4 SHALL APPLY TO NEW FIXTURES IN ADDITIONS OR AREAS OF ALTERATION TO THE BUILDING.
		X	5.303.6 STANDARDS FOR PLUMBING FIXTURES AND FITTINGS. PLUMBING FIXTURES AND FITTINGS SHALL BE INSTALLED IN ACCORDANCE WITH THE CALIFORNIA PLUMBING CODE, AND SHALL MEET THE APPLICABLE STANDARDS REFERENCED IN TABLE 1701.1 OF THE CALIFORNIA PLUMBING CODE AND IN CHAPTER 6 OF THIS CODE.

LDA DESIGNERS & ARCHITECTS

Architect:
LDA Partners, LLP
Designers & Architects
222 Central Court
Stockton, CA 95204
209.943.0405
www.ldapartners.com

LICENSED ARCHITECT
ERIC WILLIAM WHITE
C28388
September 2021
STATE OF CALIFORNIA

Client:
LATHROP-MANTECA FIRE PROTECTION DISTRICT
19001 SOMERSTON PARKWAY
LATHROP, CA 95330
209.941.5102

Project:
FIRE STATION 31 UPGRADES

800 J STREET
LATHROP CA 95330

Project No.: ###-#-##
Drawn By: DW
Checked By: GL

No.	Description	Date	By
1	PLAN CHECK #1 1ST REVIEW CYCLE	10-21-2020	
2	PLAN CHECK #2 ADDENDA 1	12-09-2020	

3RD SUBMITTAL - BLDG. DEPT.
12/09/2020

PLUMBING -
GREEN BUILDING CODE NOTES

P1.01

LICENSED PROFESSIONAL ENGINEER
STEVEN J. KOHLHOFF
MECHANICAL
STATE OF CALIFORNIA

neXus engineering
Consulting Mechanical Engineers
1400 Lone Palm Ave, Suite A
Modesto, CA 95351
Tel: 209.572.7399 Fax: 209.236.1579
www.nexusengineering.net
HVAC, Plumbing/Piping, Fire Sprinklers
Process/Plant Engineering, Refrigeration

12/2020 Jobs\20140 - Lathrop Fire Station\20140 - Plumbing.dwg, 12/9/2020 2:25:43 PM, DWG To PDF.pc3

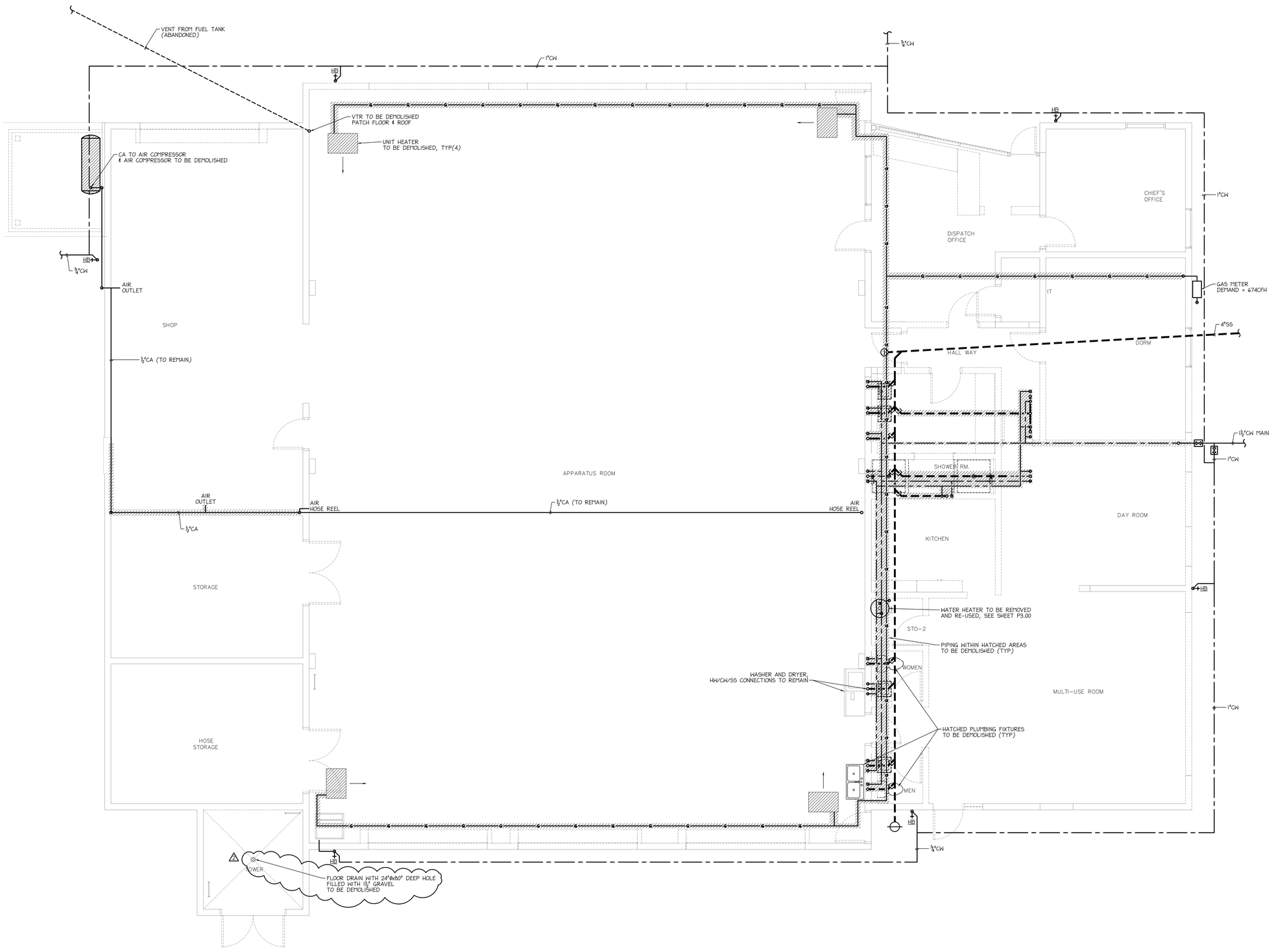

1 P2.00 PLUMBING - DEMOLITION FLOOR PLAN

SCALE: ¼" = 1'-0"

NORTH

LDA DESIGNERS & ARCHITECTS

Architect:
LDA Partners, LLP
Designers & Architects
222 Central Court
Stockton, CA 95204
209.943.0405
www.ldapartners.com

LICENSED ARCHITECT ERIC WILLIAM MOATE C28388 September 2021 STATE OF CALIFORNIA

Client:
LATHROP-MANTECA FIRE PROTECTION DISTRICT
19001 SOMERSTON PARKWAY
LATHROP, CA 95330
209.941.5102

Project:
FIRE STATION 31 UPGRADES

800 J STREET
LATHROP CA 95330

Project No.: ###-#-##
Drawn By: DW
Checked By: GL

No.	Description	Date	By
1	PLAN CHECK #1 1ST REVIEW CYCLE	10-21-2020	
2	PLAN CHECK #2 ADDENDA 1	12-09-2020	

3RD SUBMITTAL - BLDG. DEPT. 12/09/2020

PLUMBING - DEMOLITION FLOOR PLAN

P2.00

REGISTERED PROFESSIONAL ENGINEER KEN LAU No. M 21812 MECHANICAL STATE OF CALIFORNIA

neXus engineering
Consulting Mechanical Engineers
1400 Lone Palm Ave, Suite A
Modesto, CA 95351
Tel: 209.572.7399 Fax: 209.236.1579
www.nexusengineering.net
HVAC . Plumbing/Piping . Fire Sprinklers
Process/Plant Engineering . Refrigeration

J:\2020 Jobs\20140 - Lathrop Fire Station\20140 - Plumbing.dwg, 12/9/2020 2:25:43 PM, DWG To PDF.pc3

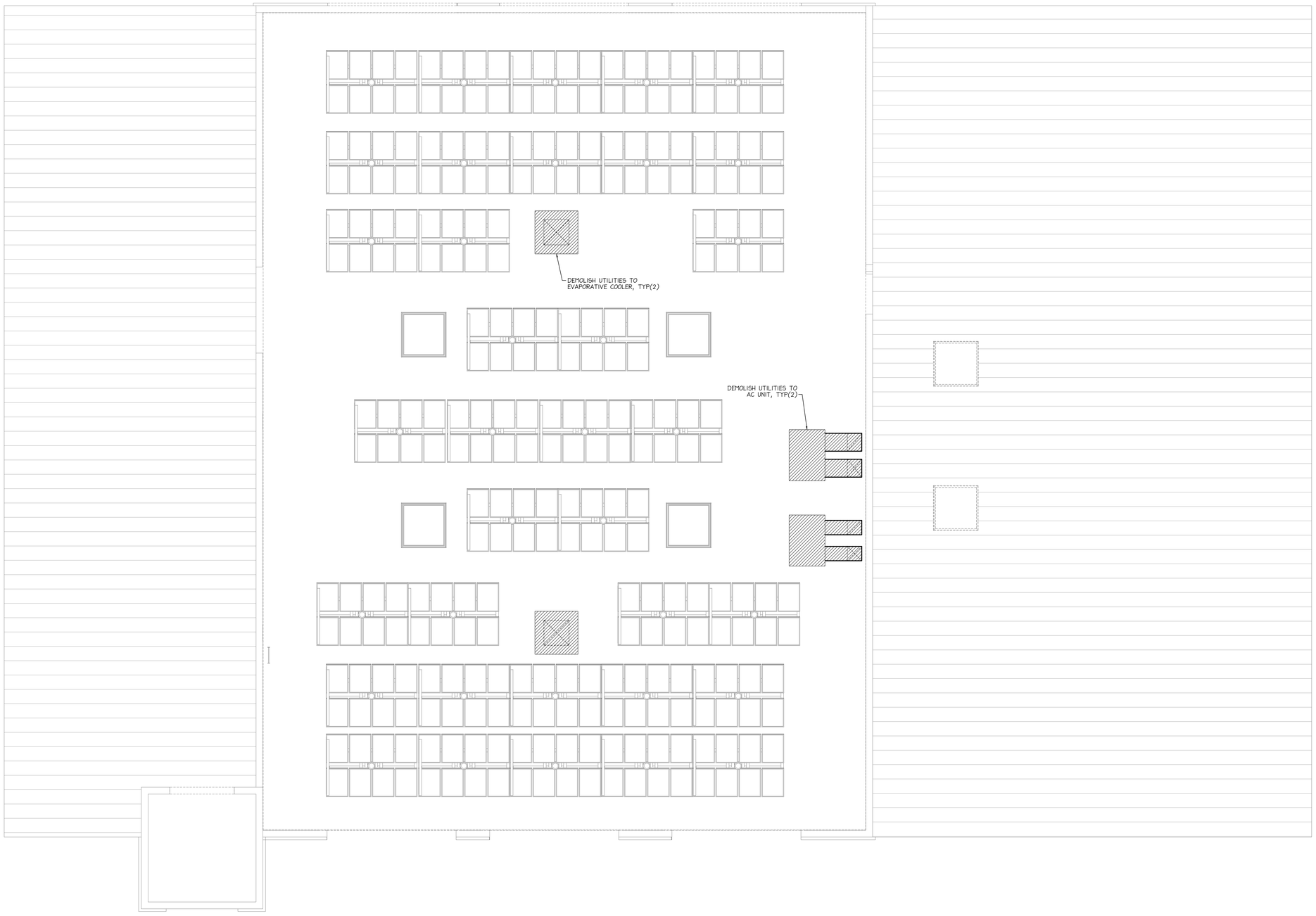

1
P2.01
PLUMBING - DEMOLITION ROOF PLAN
SCALE: 1/4" = 1'-0"

NORTH

LDA
DESIGNERS & ARCHITECTS

Architect:
LDA Partners, LLP
Designers & Architects
222 Central Court
Stockton, CA 95204
209.943.0405
www.ldapartners.com

LICENSED ARCHITECT
ERIC WILLIAM WOHLE
C28388
September 2021
STATE OF CALIFORNIA

Client:
LATHROP-MANTECA FIRE
PROTECTION DISTRICT
19001 SOMERSTON PARKWAY
LATHROP, CA 95330
209.941.5102

Project:
FIRE STATION 31 UPGRADES

800 J STREET
LATHROP CA 95330

Project No.: ###-#-##
Drawn By: DW
Checked By: GL

No.	Description	Date	By
1	PLAN CHECK #1 1ST REVIEW CYCLE	10-21-2020	
2	PLAN CHECK #2 ADDENDA 1	12-09-2020	

3RD SUBMITTAL - BLDG. DEPT.
12/09/2020

PLUMBING -
DEMOLITION ROOF PLAN

REGISTERED PROFESSIONAL ENGINEER
ALLEN LAWRENCE
MECHANICAL
STATE OF CALIFORNIA

neXus engineering
Consulting Mechanical Engineers
1400 Lone Palm Ave, Suite A
Modesto, CA 95351
Tel: 209.572.7399 Fax: 209.236.1579
www.nexusengineering.net
HVAC . Plumbing/Piping . Fire Sprinklers
Process/Plant Engineering . Refrigeration

P2.01

J:\2020 Jobs\20140 - Lathrop Fire Station\20140 - Plumbing.dwg, 12/9/2020 2:25:44 PM, DWG To PDF.pc3

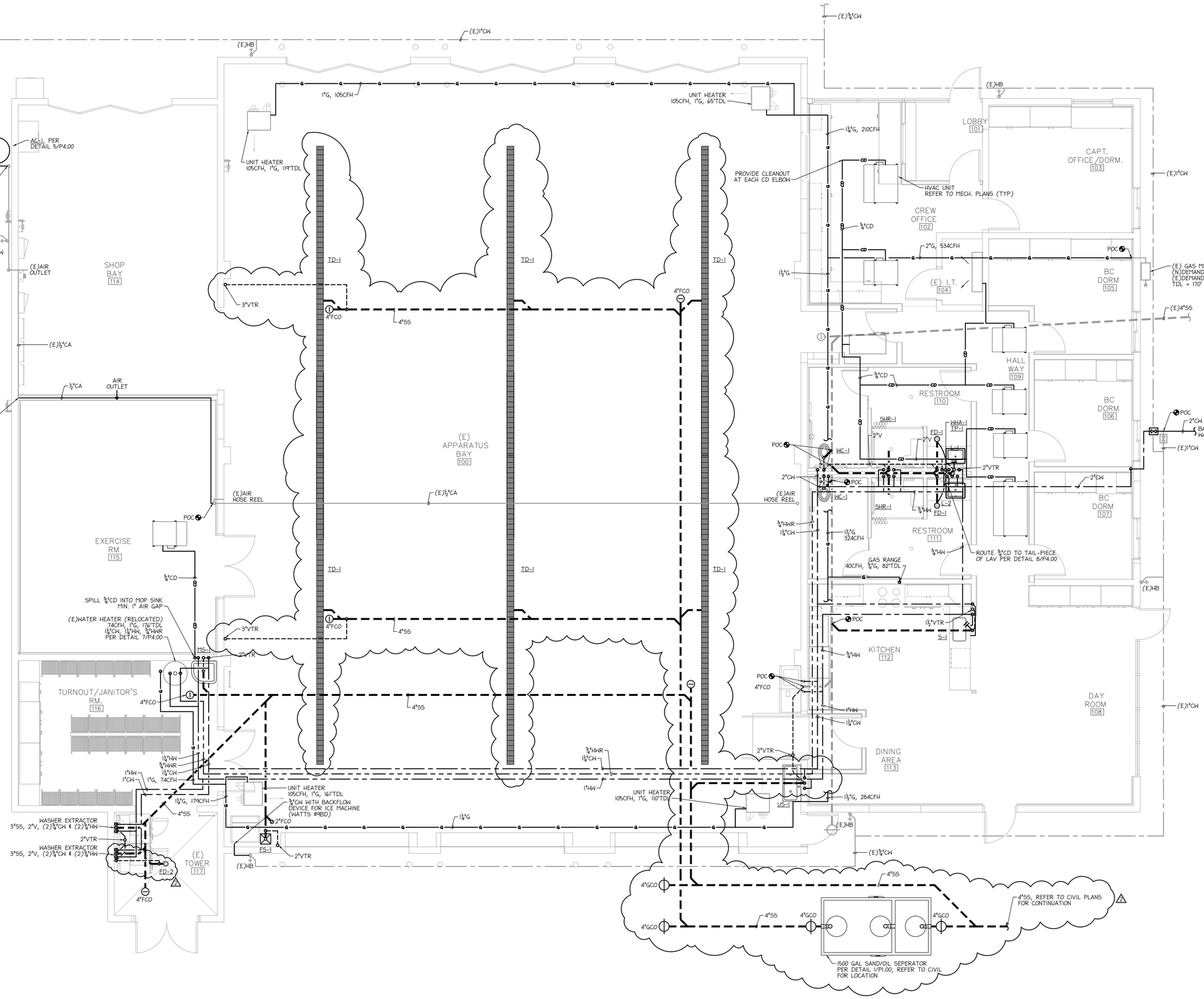

1 P3.00 PLUMBING - FLOOR PLAN

SCALE: ¼" = 1'-0"

NORTH

LDA DESIGNERS & ARCHITECTS

Architect:
LDA Partners, LLP
Designers & Architects
222 Central Court
Stockton, CA 95204
209.943.0405
www.ldapartners.com

LICENSED ARCHITECT ERIC WILLIAM WHITE C28388 September 2021 STATE OF CALIFORNIA

Client:
LATHROP-MANTECA FIRE PROTECTION DISTRICT
19001 SOMERSTON PARKWAY
LATHROP, CA 95330
209.941.5102

Project:
FIRE STATION 31 UPGRADES

800 J STREET
LATHROP CA 95330

Project No.: ###-#-##
Drawn By: DW
Checked By: GL

No.	Description	Date	By
1	PLAN CHECK #1 1ST REVIEW CYCLE	10-21-2020	
2	PLAN CHECK #2 ADDENDA 1	12-09-2020	

3RD SUBMITTAL - BLDG. DEPT. 12/09/2020

PLUMBING - FLOOR PLAN

P3.00

PROFESSIONAL ENGINEER LEN LAMB 20100 MECHANICAL STATE OF CALIFORNIA

neXus engineering
Consulting Mechanical Engineers
1400 Lone Palm Ave, Suite A
Modesto, CA 95351
Tel: 209.572.7399 Fax: 209.236.1579
www.nexusengineering.net
HVAC, Plumbing/Piping, Fire Sprinklers
Process/Plant Engineering, Refrigeration

J:\2020 Jobs\20140 - Lathrop Fire Station\20140 - Plumbing.dwg, 12/9/2020 2:25:45 PM, DWG To PDF.pc3

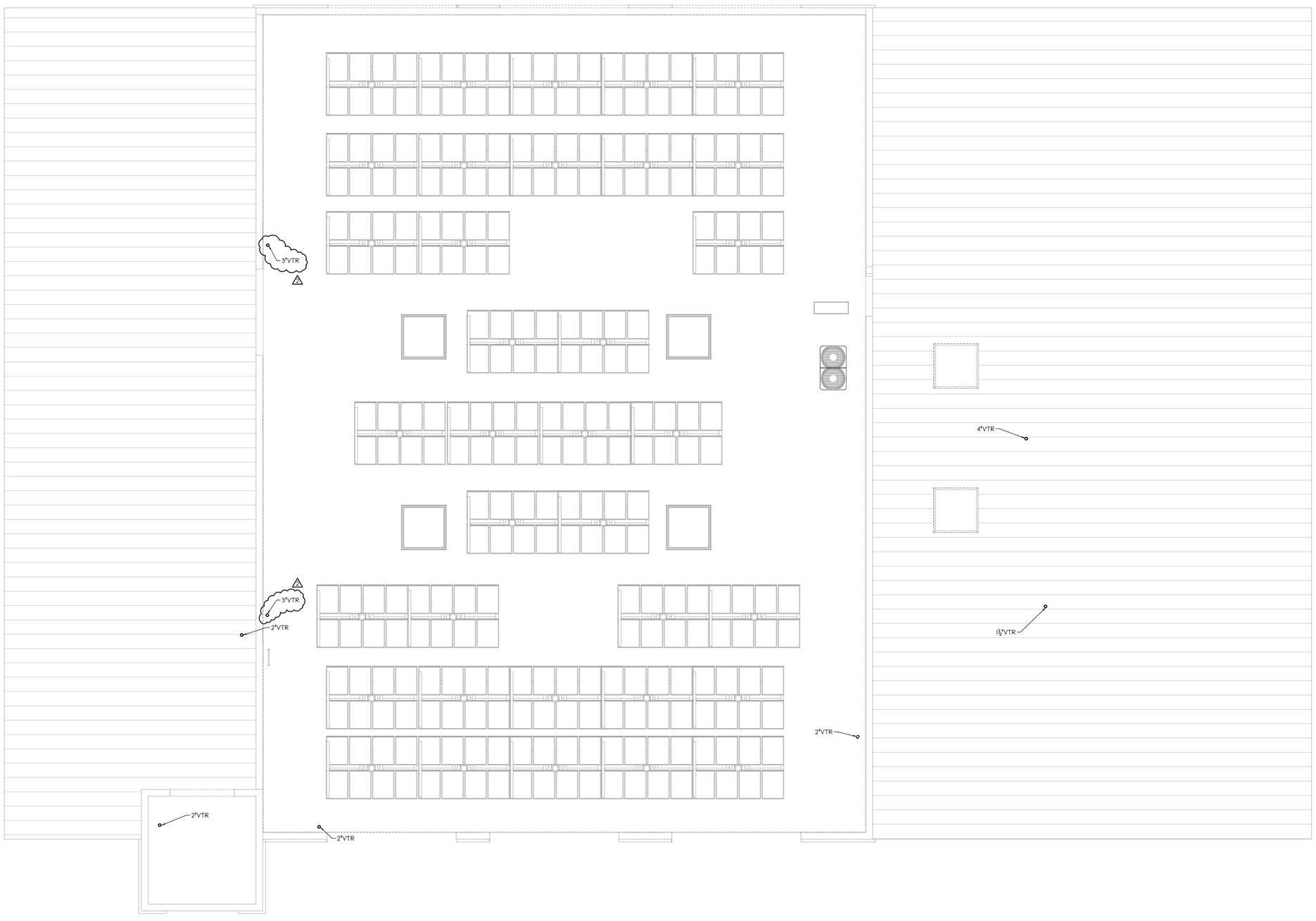

1 P3.01 PLUMBING - ROOF PLAN
SCALE: ¼" = 1'-0"

NORTH

LDA
DESIGNERS & ARCHITECTS

Architect:
LDA Partners, LLP
Designers & Architects
222 Central Court
Stockton, CA 95204
209.943.0405
www.ldapartners.com

LICENSED ARCHITECT
ERIC WILLIAM WOHLE
C28388
September 2021
STATE OF CALIFORNIA

Client:
LATHROP-MANTECA FIRE PROTECTION DISTRICT
19001 SOMERSTON PARKWAY
LATHROP, CA 95330
209.941.5102

Project:
FIRE STATION 31 UPGRADES

800 J STREET
LATHROP CA 95330

Project No.: ###-#-##
Drawn By: DW
Checked By: GL

No.	Description	Date	By
1	PLAN CHECK #1 1ST REVIEW CYCLE	10-21-2020	
2	PLAN CHECK #2 ADDENDA 1	12-09-2020	

3RD SUBMITTAL - BLDG. DEPT.
12/09/2020

PLUMBING -
ROOF PLAN

REGISTERED PROFESSIONAL ENGINEER
ALLEN LAWRENCE
MECHANICAL
STATE OF CALIFORNIA

neXus engineering
Consulting Mechanical Engineers
1400 Lone Palm Ave, Suite A
Modesto, CA 95351
Tel: 209.572.7399 Fax: 209.236.1579
www.nexusengineering.net
HVAC . Plumbing/Piping . Fire Sprinklers
Process/Plant Engineering . Refrigeration

P3.01

J:\2020 Jobs\20140 - Lathrop Fire Station\20140 - Plumbing.dwg, 12/9/2020 2:25:46 PM, DWG To PDF.pc3

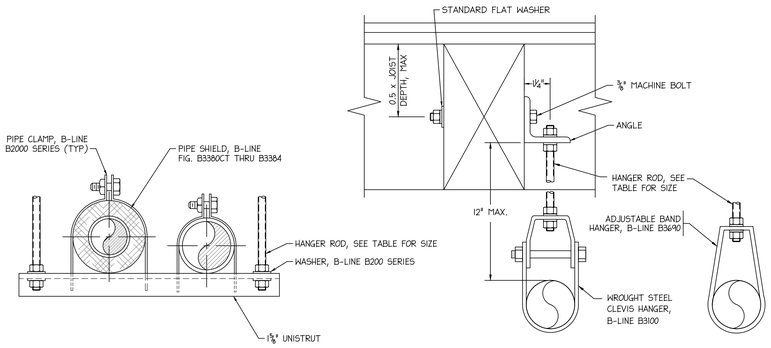

1 P4.00 **PIPE HANGER DETAIL**
SCALE: NONE

STEEL & BRASS PIPE HANGER SCHEDULE
HORIZONTAL SUPPORT
PIPE W/ THREADED OR WELDED JOINTS

PIPE SIZE	HANGER ROD	MAX HORIZONTAL SPAN
1/2" - 3/4"	3/8"	10'
1" - 4"	3/8"	12'
6"	1/2"	12'

STEEL PIPE FOR WATER OR DWV THREADED OR WELDED JOINTS, SIZES DEVELOPED FROM TABLE 313.3 & TABLE 313.6 OF THE 2019 CPC. ALL PIPE SHALL BE SUPPORTED WITHIN 18" OF A JOINT.
SEISMIC BRACING REQUIRED FOR:
1. MEDICAL GAS, VACUUM PIPE, COMPRESSED AIR, FUEL PIPING, AND OTHER HAZARDOUS PIPE 1" DIA AND LARGER
2. ALL PIPING 1-1/4" DIA AND LARGER IN BOILER ROOMS, MECHANICAL EQUIPMENT ROOMS, & REFRIGERATION MECHANICAL ROOMS
3. ALL PIPE 2-1/2" DIA AND LARGER, SUPPORTED GREATER THAN 12' FROM THE SUPPORT STRUCTURE TO THE TOP OF THE PIPE. STRUCTURE TO THE TOP OF THE PIPE REQUIRE SEISMIC BRACING.
EXCEPTION: ALL PIPE SUSPENDED 12" OR LESS IN LENGTH FROM TOP OF PIPE TO BOTTOM OF SUPPORT STRUCTURE.

COPPER TUBE & PIPE HANGER SCHEDULE
HORIZONTAL SUPPORT
SOLDER OR BRAZED JOINTS

PIPE SIZE	HANGER ROD	MAX HORIZONTAL SPAN
1/2" - 1-1/2"	3/8"	6'
2" - 4"	3/8"	10'
6"	1/2"	10'

COPPER TUBE AND PIPE WITH SOLDER, BRAZED OR WELDED JOINTS, SIZES DEVELOPED FROM TABLE 313.3 & TABLE 313.6 OF THE 2019 CPC. ALL PIPE SHALL BE SUPPORTED WITHIN 18" OF A JOINT.
SEISMIC BRACING REQUIRED FOR:
1. MEDICAL GAS, VACUUM PIPE, COMPRESSED AIR, FUEL PIPING, AND OTHER HAZARDOUS PIPE 1" DIA AND LARGER
2. ALL PIPING 1-1/4" DIA AND LARGER IN BOILER ROOMS, MECHANICAL EQUIPMENT ROOMS, & REFRIGERATION MECHANICAL ROOMS
3. ALL PIPE 2-1/2" DIA AND LARGER, SUPPORTED GREATER THAN 12' FROM THE SUPPORT STRUCTURE TO THE TOP OF THE PIPE. STRUCTURE TO THE TOP OF THE PIPE REQUIRE SEISMIC BRACING.
EXCEPTION: ALL PIPE SUSPENDED 12" OR LESS IN LENGTH FROM TOP OF PIPE TO BOTTOM OF SUPPORT STRUCTURE.

SCH 40 PVC & ABS PIPE HANGER SCHEDULE
HORIZONTAL SUPPORT
SOLVENT CEMENTED JOINTS

PIPE SIZE	HANGER ROD	MAX HORIZONTAL SPAN
1/2" - 1-1/2"	3/8"	4'
2" - 4"	3/8"	4'
6"	1/2"	4'

COPPER TUBE AND PIPE WITH SOLDER, BRAZED OR WELDED JOINTS, SIZES DEVELOPED FROM TABLE 313.3 & TABLE 313.6 OF THE 2019 CPC. ALL PIPE SHALL BE SUPPORTED WITHIN 18" OF A JOINT.
SEISMIC BRACING REQUIRED FOR:
1. MEDICAL GAS, VACUUM PIPE, COMPRESSED AIR, FUEL PIPING, AND OTHER HAZARDOUS PIPE 1" DIA AND LARGER
2. ALL PIPING 1-1/4" DIA AND LARGER IN BOILER ROOMS, MECHANICAL EQUIPMENT ROOMS, & REFRIGERATION MECHANICAL ROOMS
3. ALL PIPE 2-1/2" DIA AND LARGER, SUPPORTED GREATER THAN 12' FROM THE SUPPORT STRUCTURE TO THE TOP OF THE PIPE. STRUCTURE TO THE TOP OF THE PIPE REQUIRE SEISMIC BRACING.
EXCEPTION: ALL PIPE SUSPENDED 12" OR LESS IN LENGTH FROM TOP OF PIPE TO BOTTOM OF SUPPORT STRUCTURE.

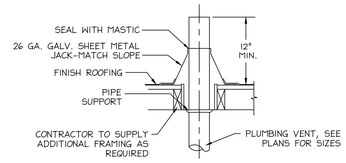

2 P4.00 **VENT THRU ROOF DETAIL**
SCALE: NONE

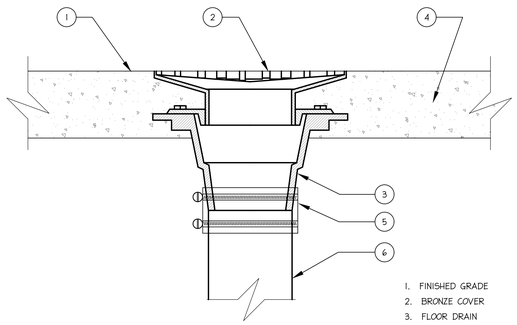

1. FINISHED GRADE
2. BRONZE COVER
3. FLOOR DRAIN
4. CONCRETE FLOOR
5. NO-HUB CLAMP
6. SEWER PIPE RISER

3 P4.00 **FLOOR DRAIN DETAIL**
SCALE: NONE

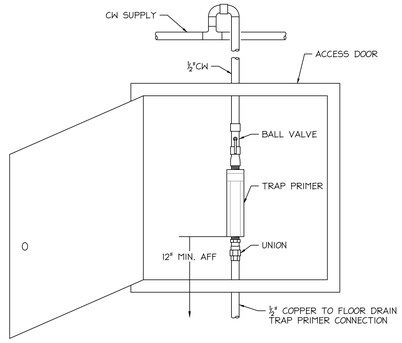

4 P4.00 **TRAP PRIMER DETAIL**
SCALE: NONE

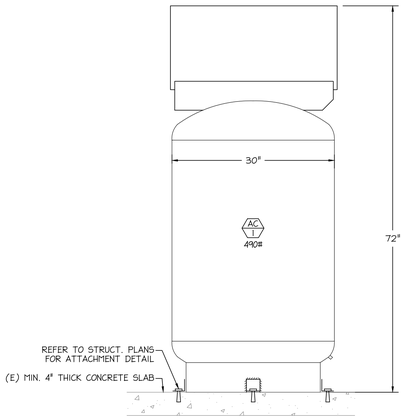

5 P4.00 **AIR COMPRESSOR MOUNTING DETAIL**
SCALE: NONE

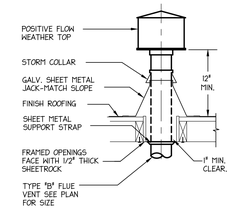

6 P4.00 **FLUE THRU ROOF DETAIL**
SCALE: NONE

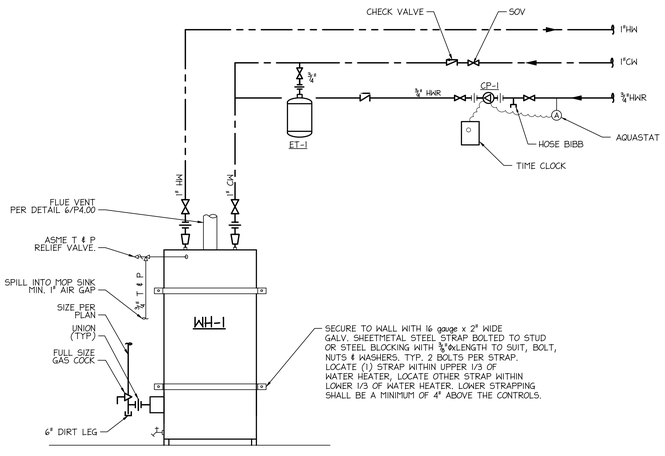

NOTES:
1. UNLESS OTHERWISE NOTED, ALL VALVES & FITTINGS SHALL BE LINE SIZE. USE BELL REDUCERS WHERE REDUCERS ARE REQUIRED. SEE PLANS FOR SIZES.
2. WATER HEATERS SHALL BE SET AT A MAXIMUM TEMPERATURE OF 120° F.

7 P4.00 **WATER HEATER PIPING DIAGRAM**
SCALE: NONE

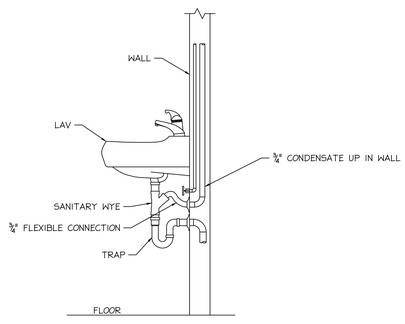

8 P4.00 **CONDENSATE TAILPIECE DETAIL**
SCALE: NONE

REFER TO DETAIL ON SHEET G4.01

LDA DESIGNERS & ARCHITECTS

Architect:
LDA Partners, LLP
Designers & Architects
222 Central Court
Stockton, CA 95204
209.943.0405
www.ldapartners.com

LICENSED ARCHITECT ERIC WILLIAM WHITE C28388 September 2021 STATE OF CALIFORNIA

Client:
LATHROP-MANTECA FIRE PROTECTION DISTRICT
19001 SOMERSTON PARKWAY
LATHROP, CA 95330
209.941.5102

Project:
FIRE STATION 31 UPGRADES

800 J STREET
LATHROP CA 95330

Project No.: ###-#-##
Drawn By: DW
Checked By: GL

No.	Description	Date	By
1	PLAN CHECK #1 1ST REVIEW CYCLE	10-21-2020	
2	PLAN CHECK #2 ADDENDA 1	12-09-2020	

3RD SUBMITTAL - BLDG. DEPT.
12/09/2020

PLUMBING - DETAILS

P4.00

neXus engineering
Consulting Mechanical Engineers
1400 Lone Palm Ave, Suite A
Modesto, CA 95351
Tel: 209.572.7399 Fax: 209.236.1579
www.nexusengineering.net
HVAC . Plumbing/Piping . Fire Sprinklers
Process/Plant Engineering . Refrigeration

J:\2020 Jobs\20140 - Lathrop Fire Station\20140 - Plumbing.dwg, 12/9/2020 2:25:47 PM, DWG To PDF.pc3

GENERAL ELECTRICAL LEGEND

- CONCRETE PULL BOX –SIZE AS NOTED – LIDS AS NOTED 'P' POWER, 'S' SIGNAL, 'F' FIRE ALARM & 'D' DATA; '–T' DENOTES TRAFFIC LID
- CONDUIT –SURFACE MOUNTED OR ABOVE CEILING –EMT WITH COMPRESSION FITTING UNLESS NOTED ON PLANS
- CONDUIT –CONCEALED BELOW FLOOR IN EMT OR UNDERGROUND IN PVC SCH 40 WITH IMC ELBOWS
- HOMERUN TO PERSPECTIVE PANEL OR CABINET –BRANCH CIRCUIT WITH OUT FURTHER DESIGNATION IS A #12 WIRE CIRCUIT
- FLEX
- TERMINAL CABINET
- PANEL BOARD –SEE SCHEDULE
- MOTOR/EXHAUST FAN –N.I.E.S. –CONNECT AS REQUIRED
- DUPLEX RECEPTACLE +15" A.F.F. FROM BOTTOM OF BOX U.O.N.
- QUADPLEX RECEPTACLE +15" A.F.F. FROM BOTTOM OF BOX U.O.N.
- HALF SWITCHED DUPLEX RECEPTACLE +15" A.F.F. FROM BOTTOM OF BOX U.O.N.
- HALF SWITCHED QUADPLEX RECEPTACLE +15" A.F.F. FROM BOTTOM OF BOX U.O.N.
- FLOOR POWER RECEPTACLE –WALKER OR EQUAL
- 30A. –4 WIRE GROUND RECEPTACLE +15" A.F.F. FROM BOTTOM OF BOX U.O.N.
- 50A. –4 WIRE GROUND RECEPTACLE +15" A.F.F. FROM BOTTOM OF BOX U.O.N.
- GFCI DUPLEX RECEPTACLE +15" A.F.F. FROM BOTTOM OF BOX U.O.N.
- HALF SWITCHED GFCI DUPLEX RECEPTACLE +15" A.F.F. FROM BOTTOM OF BOX U.O.N.
- GFCI QUADPLEX RECEPTACLE +15" A.F.F. FROM BOTTOM OF BOX U.O.N.
- HALF SWITCHED GFCI QUADPLEX RECEPTACLE +15" A.F.F. FROM BOTTOM OF BOX U.O.N.
- JUNCTION BOX –4 11/16" x 2 1/8" SQUARE OR SMALL
- JUNCTION BOX –LARGER THAN 4 11/16" x 2 1/8" SQUARE
- $HP MOTOR RATED DISCONNECT SWITCH
- 30 FUSED DISCONNECT SWITCH –SIZE AS NOTED –30A. SHOWN
- FULL VOLTAGE STARTER –SIZE AS NOTED –SIZE 3 SHOWN
- 3 30 COMBINATION STARTER –SIZE AS NOTED –SIZE 3 SHOWN
- R PLUG LOAD ROOM CONTROLLER. WATTSTOPPER #LMPL–101 OR EQUAL

GROUND – XX – NEUTRAL
WIRE SIZE – CKT. WIRE

COMMUNICATIONS LEGEND

- TELEPHONE OUTLET –SUTTLE, AT&T/LUCENT, OR EQUAL +18" ELSE WALL MOUNTED +48"
- COMBINATION TELEPHONE & DATA OUTLET –AT&T/LUCENT M–SERIES OR EQUAL +18"
- #d#t#c MULTIFUNCTION OUTLET –DATA/TELE./CATV –AT&T/LUCENT M–SERIES OR EQUAL +18" –"d" DENOTE # OF CAT–5 DATA, "t" DENOTES TELE, "c" DENOTES CATV DROPS –NOTHING DENOTES C.O. w/BLANK COVER –TYPICAL
- MDF MAIN DISTRIBUTION FRAME –RACK OR BACKBOARD –SEE PLANS
- IDF INTERMEDIATE DISTRIBUTION FRAME –RACK OR BACKBOARD –SEE PLANS
- S P.A. SPEAKER –ELECTRO–VOICE OR EQUAL –COMPATIBLE WITH (E) SYSTEM +96"
- SURFACE HORN –120V.
- I INTERCOM HANDSET –COMPATIBLE SPECIFIED SYSTEM +48"
- SURFACE MOUNTED CLOCK –SIZE AS NOTED –STANDARD CR –120V. SERIES OR EQUAL

ELECTRICAL COMPLIANCE NOTES

THE INTENT OF THE DRAWINGS AND SPECIFICATION IS TO CONSTRUCT THE PROPOSED BUILDING IN ACCORDANCE WITH TITLE 24, CALIFORNIA CODE OF REGULATIONS. ALL WORK SHALL BE IN ACCORDANCE WITH THE REQUIREMENTS OF TITLE 22, DIVISION 7, CHAPTER 7, CALIFORNIA CODE OF REGULATIONS AND TITLE 24 –– ALL APPLICABLE PARTS OF LATEST EFFECTIVE EDITIONS.

2019 CALIFORNIA ADMINISTRATIVE CODE (CAC)
PART 1, TITLE 24, CALIFORNIA CODE OF REGULATIONS (CCR)
2019 CALIFORNIA BUILDING CODE (CBC)
PART 2, TITLE 24, CCR
BASED ON THE 2018 INTERNATIONAL BUILDING CODE (IBC)
2019 CALIFORNIA ELECTRICAL CODE (CEC)
PART 3, TITLE 24, CCR
BASED ON THE 2017 NATIONAL ELECTRICAL CODE (NEC)
2019 CALIFORNIA MECHANICAL CODE (CMC)
PART 4, TITLE 24, CCR
BASED ON THE 2018 UNIFORM MECHANICAL CODE (UMC)
2019 CALIFORNIA PLUMBING CODE (CPC)
PART 5, TITLE 24, CCR
BASED ON THE 2018 UNIFORM PLUMBING CODE (UPC)
2019 CALIFORNIA FIRE CODE (CFC)
PART 9, TITLE 24, CCR
BASED ON THE 2018 INTERNATIONAL FIRE CODE (IFC)
2019 NFPA 72, NATIONAL FIRE ALARM & SIGNALING CODE
w/ CALIFORNIA AMENDMENTS.

UNLESS OTHERWISE STATED, IT IS INTENDED THAT THE ABOVE CODES AND REGULATIONS REFER TO THE LATEST EDITION OR REVISION IN EFFECT ON THE DATE OF THE CONTRACT. NOTHING ON THE DRAWING IS TO BE CONSTRUED AS REQUIRING OR PERMITTING WORK THAT IS CONTRARY TO THE ABOVE LISTED CODES AND REGULATIONS, OR OTHER LOCAL, STATE OR FEDERAL CODES OR REGULATIONS WHICH MAY BE APPLICABLE.

LIGHTING LEGEND

SEE FIXTURE SCHEDULE FOR EXACT CALL OUT & DESCRIPTION

- $ SINGLE POLE TOGGLE SWITCH +48"
- $2 TWO POLE TOGGLE SWITCH +48"
- $3 THREE POLE TOGGLE SWITCH +48"
- $4 FOUR POLE TOGGLE SWITCH +48"

SWITCHING SUBSCRIPTS
a DEVICE CONTROLLED
k KEY
p PILOT
M OCCUPANCY SENSOR

- DIMMER SWITCH SINGLE POLE +48" TO TOP OF BOX, WATTSTOPPER #LMDM–101
- FIXTURE IDENTIFICATION –LETTER INDICATES FIXTURE TYPE –NUMERAL INDICATES LAMP QUANTITY AND WATTAGE
- CEILING MOUNT DUAL TECHNOLOGY OCCUPANCY SENSOR. WATTSTOPPER #LMDC–100.
- WALL CORNER MOUNT DUAL TECHNOLOGY OCCUPANCY SENSOR. WATTSTOPPER #LMDX–100.
- ROOM CONTROLLER WITH 0–10V DIMMING. WATTSTOPPER #LMRC–211.
- DAYLIGHT CEILING SENSOR. WATTSTOPPER LMLS–400.

FIRE ALARM LEGEND

*SEE FIRE ALARM EQUIPMENT SCHEDULE FOR EXACT EQUIPMENT DESCRIPTION

- FACP FIRE ALARM CONTROL PANEL
- SMOKE DETECTOR
- HEAT DETECTOR

DETECTOR SUBSCRIPTS:
a ATTIC
d DUCT
u UNDER FLOOR/PLATFORM

- F MANUAL PULL STATION +48" A.F.F. – TYPICAL
- WP ELECTRIC HORN –SUBSCRIPTS: M–MINI WP–WEATHER PROOF
- STROBE
- COMBINATION HORN/STROBE

GENERAL ELECTRICAL NOTES

1. PROVIDE ALL LABOR, MATERIALS, TOOLS, PLANT EQUIPMENT, TRANSPORTATION AND ALL PERFORM ALL OPERATIONS NECESSARY FOR THE PROPER EXECUTION AND COMPLETION OF ALL ELECTRICAL WORK REQUIRED FOR THE COMPLETE AND OPERATING SYSTEMS AS OUTLINED WITHIN THE SCOPE OF WORK.
2. UNDERWRITERS LABORATORIES, INC., SHALL MEET THEIR REQUIREMENTS AND SHALL BEAR THEIR LABEL WHEREVER STANDARDS HAVE BEEN ESTABLISHED AND LABEL SERVICE IS REGULARLY FURNISHED BY THAT AGENCY.
3. THE SIZE AND LOCATIONS OF EQUIPMENT ARE SHOWN TO SCALE WHEREVER POSSIBLE, CONTRACTOR SHALL MAKE USE OF ALL DATA IN ALL CONTRACT DOCUMENTS AND VERIFY THIS INFORMATION AT THE SITE.
4. CONDUCTORS SHALL BE COPPER CONDUCTORS TYPE AS NOTED ON CONSTRUCTION DOCUMENTS.
5. ALL REQUIRED CONDUITS SHALL BE PROVIDED BY E.C. LOW VOLTAGE WIRING SHALL BE BY MECHANICAL CONTRACTOR, LINE VOLTAGE (50 VOLTS OR MORE) SHALL BE BY ELECTRICAL CONTRACTOR.
6. ALL CONDUITS SHALL BE SUPPORTED AND BRACED PER OPA NO. OPA–0120, THE "UNISTRUT SEISMIC BRACING SYSTEM " FOR PIPES AND CONDUITS ONLY. LAYOUT DRAWINGS, SHOWING THE BRACING/SUPPORT LOCATIONS AND REFERENCES TO DETAILS FROM THE RELEVANT OSHPD PRE–APPROVALS FOR PIPING/DUCTS/CONDUITS EXCEPT FIRE SPRINKLERS, NEED TO BE SUBMITTED FOR USE BY THE IOR AND OSHPD STAFF. THE LAYOUT DRAWINGS NEED TO BE REVIEWED AND ACCEPTED BY THE AOR AND SEOR PRIOR TO STARTING INSTALLATION OF THE BRACING/SUPPORT. IOR SHALL ENSURE THE ABOVE REQUIREMENTS ARE SATISFIED.
7. DO NOT PENETRATE STRUCTURAL MEMBERS, INCLUDING BEAMS, COLUMNS, OR FOOTINGS, WITHOUT PRIOR WRITTEN CONSENT OF THE DISTRICT'S STRUCTURAL ENGINEER. SHOULD IT BECOME NECESSARY TO PENETRATE SUCH MEMBERS, NOTIFY THE DISTRICT IN WRITING WITHOUT DELAY, PRIOR TO PROCEEDING WITH CONSTRUCTION AROUND SUCH MEMBERS.
8. ALL ELECTRICAL WORK SHALL CONFORM WITH THE 2019 CALIF. ELECTRICAL CODE CALIFORNIA TITLE 17, 19 & 24 ALONG WITH N.F.P.A. STANDARDS AND THE STATE FIRE MARSHAL'S REQUIREMENTS.
9. ALL WORK TO BE IN ACCORDANCE WITH REQUIREMENTS OF STATE & GOVERNING LOCAL FIRE CODES AND BUILDING CODES.
10. WHERE EXISTING CONSTRUCTION IS CUT, DAMAGED, OR REMODELED, PATCH WITH MATERIALS TO MATCH IN KIND, QUALITY, AND PERFORMANCE.
11. WORK SHALL BE EXECUTED IN A CAREFUL AND ORDERLY MANNER WITH THE LEAST POSSIBLE DISTURBANCE TO PUBLIC AND TO OCCUPANTS OF EXISTING BUILDING.
12. CONTRACTOR SHALL ASSUME SOLE RESPONSIBILITY FOR SAFETY OF ALL PERSONS ON OR ABOUT THE CONSTRUCTION SITE, IN ACCORDANCE WITH APPLICABLE LAWS AND CODES. GUARD ALL HAZARDS IN ACCORDANCE WITH THE SAFETY PROVISIONS OF THE LATEST MANUAL OF ACCIDENT PREVENTION PUBLISHED BY THE ASSOCIATED GENERAL CONTRACTORS OF AMERICA.
13. CLEAN ALL EXPOSED SURFACES AND NEW EQUIPMENT AFTER COMPLETION.
14. CONTRACTOR TO COORDINATE WITH OWNERS VENDORS (SUCH AS, BUT NOT LIMITED TO: SECURITY, PHONES, DATA, CLOSED CIRCUIT T.V., ETC.) AND ALLOW ACCESS TO THE CONSTRUCTION SITE.
15. ALL CONDUIT SHALL BE TYPE EMT CONDUIT UNLESS OTHERWISE NOTED. TYPE MC CABLE SHALL NOT BE USED UNLESS SPECIFICALLY NOTED ON THE CONSTRUCTION DOCUMENTS.
16. OPERATED DEVICES SUCH AS, BUT NOT LIMITED TO, TELE/DATA OUTLETS, RECEPTACLE OUTLETS AND LIGHT SWITCHES INSTALLED IN AREAS NOT RESTRICTED TO AUTHORIZED MAINTENANCE PERSONAL SHALL BE MOUNTED AT A MINIMUM OF +15" AFF., AS MEASURED FROM THE BOTTOM OF THE DEVICE OUTLET BOX, AND MAXIMUM OF +48" AFF., AS MEASURED FROM THE TOP OF THE DEVICE OUTLET BOX.
17. ALL CHANGE ORDER PROPOSALS AND CHANGE ORDERS, BOTH ADDITIVE AND DEDUCTIVE, SHALL BE BASED UPON AND BE ACCOMPANIED BY A DETAILED MATERIALS AND LABOR BREAKDOWN FOR EACH SPECIFIC TASK AND/OR ITEM. THE BREAKDOWN SHALL INCLUDE ACTUAL MATERIALS COSTS PLUS OVERHEAD AND PROFIT, AS WELL AS LABOR UNITS BASE UPON THE MOST RECENT NECA MANUAL OF LABOR UNITS (NECA INDEX #4090) OR EQUIVALENT PUBLICATION FOR EACH SPECIFIC TASK AND ITEM. LABOR COSTS SHALL BE COMPUTED AS OUTLINED WITHIN THE GENERAL CONDITIONS, BASED UPON THE NECA LABOR TABLES FOR EACH TASK REQUIRED. MATERIALS COSTS SHALL INCLUDE ACTUAL CONTRACTOR I INVOICE PLUS NO MORE THAN 15% MARKUP. THE OWNER AND CONTRACTOR AGREE TO THE ABOVE CHANGE ORDER COST PROCEDURE, FOR BOTH ADDITIVE AND DEDUCTIVE CHANGE ORDERS.
18. ALL PERSONNEL WORKING WITH ENERGIZED EQUIPMENT WITHIN THE RESTRICTED ZONE PER NFPA–70E SHALL COMPLY WITH ALL NFPA–70E AND OSHA REQUIREMENTS AND BE ARC FLASH SAFETY CERTIFIED.

ELECTRICAL ABBREVIATIONS

Δ	DELTA CONNECTED	CATV	CABLE TELEVISION	ENCL	ENCLOSURE	IDF	INTERMEDIATE DISTRIBUTION FRAME	MIN	MINIMUM	PS	PRESSURE SWITCH	TH	THERMOSTAT
Y	WYE CONNECTED	CKT	CIRCUIT	EP	EXPLOSION PROOF	INCAN	INCANDESCENT	MPOE	MAIN POINT OF ENTRY	PWR	POWER	TRANSF	TRANSFORMER
0	PHASE	CLG	CEILING	EQUIP	EQUIPMENT	IDC	INITIATING DEVICE CIRCUIT	MSB	MAIN SWITCHBOARD			TYP	TYPICAL
&	AND	CO	CONDUIT ONLY	ETC	ET CETERA	IN	INCHES			(R)	REMOVE(D)	TSP	TWISTED SHIELDED PAIR
@	AT	COMM	COMMUNICATION	EVAP	EVAPORATOR	INST	INSTANTANEOUS	N	NEUTRAL	RA	REMOTE ANNUNCIATOR	THRU	THROUGH
'	FEET	CONC	CONCRETE					(N)	NEW	RD	ROAD		
"	INCHES	CONN	CONNECT	(F)	FUTURE	J	JUNCTION BOX	NA	NON–AUTOMATIC	REQD	REQUIRED	UG	UNDERGROUND
		CONT	CONTINUATION OR CONTINUED	FA	FIRE ALARM			NAC	NOTIFICATION APPLIANCE CIRCUIT	REQMTS	REQUIREMENTS	UNO	UNLESS NOTED OTHERWISE
A	AMPERES	COORD	COORDINATE	FACP	FIRE ALARM CONTROL PANEL	KV	KILOVOLTS	NC	NORMALLY CLOSED	RGP	REDUNDANT GROUND PATH		
AC	ALTERNATING CURRENT	CR	CONTROL RELAY	FAT	FIRE ALARM TERMINAL CABINET	KVA	KILOVOLT AMPERES	NIES	NOT IN ELECTRICAL SECTION	RM	ROOM	V	VOLTS
ACT	ABOVE COUNTERTOP/BACKSPLASH	CT	CURRENT TRANSFORMER	FIXT	FIXTURE	KW	KILOWATTS	NIC	NOT IN ELECTRICAL CODE	RECP	RECEPTACLE	VA	VOLT AMPS
ADJ	ADJACENT, ADJOINING	COMP	COMPRESSOR	FLA	FULL LOAD AMPS			NO., #	NUMBER	RT	RAIN TIGHT	VFD	VARIABLE FREQUENCY DRIVE
AFD	ADJUSTABLE FREQUENCY DRIVE	CU	COPPER	FLEX	FLEXIBLE	L	LINE	NO	NORMALLY OPEN			VM	VOLT METER
AFF	ABOVE FINISHED FLOOR			FLUOR	FLUORESCENT	LB	ELBOW	NL	NIGHT LIGHT	SCH	SCHEDULE		
AL	ALUMINUM	DC	DIRECT CURRENT	FS	FLOW SWITCH	LF	LINEAR FEET			SEC	SECONDS, SECONDARY	W	WIRE
APPROX	APPROXIMATE	DET	DETAIL	FOR	FORWARD–OFF–REVERSE	LOS	LOCKOUT–STOP	OC	ON CENTER	SHT	SHEET	W/	WITH
ARCH	ARCHITECT	DISC	DISCONNECT	FT	FEET	LOH	LOCK–OFF–HALT	OH	OVERHEAD	SIG	SIGNAL	W/O	WITHOUT
AUTO	AUTOMATIC	DIST	DISTRIBUTION			LV	LOW VOLTAGE	OL	THERMAL OVERLOAD RELAY	SPECS	SPECIFICATIONS	WP	WEATHERPROOF
AUX	AUXILIARY	DSA	DIVISION OF THE STATE ARCHITECT	GALV	GALVANIZED			OT	OVER TEMPERATURE	SW	SWITCH	WHD	WATT HOUR DEMAND METER
ALT	ALTERNATE	DWG	DRAWING	GND	GROUND	M	MOTOR	OSHPD	OFFICE OF STATEWIDE HEALTH PLANNING AND DEVELOPMENT	SWD	SWITCHED	WM	WATT METER
AWG	AMERICAN WIRE GAUGE			GC	GENERAL CONTRACTOR	MAX	MAXIMUM			SP	SPARE	WH	WATER HEATER
		(E), EXIST	EXISTING			MCA	MINIMUM CIRCUIT AMPS	PA	PUBLIC ADDRESS	STD	STANDARD	XFMER	TRANSFORMER
B	BARE	EC	ELECTRICAL CONTRACTOR	HI	HIGH	MCC	MOTOR CONTROL CENTER	PB	PULL BOX	STR	STRANDED	(XR)	REMOVE AND RELOCATE(D)
BC	BARE COPPER GROUND	EL, ELEV	ELEVATION	HOA	HAND–OFF–AUTO	MCM	THOUSAND CIRCULAR MILLS	PNL	PANEL	SWBD	SWITCHBOARD		
BKBD	BACKBOARD	EL	EMERGENCY LIGHT			MCP	MOTOR CIRCUIT PROTECTOR	PH	PHASE				
BRKR	BREAKER	ELECT	ELECTRICAL	HOS	HAND–OFF–STANDBY	MDF	MAIN DISTRIBUTION FRAME	PR	PAIR	TELE	TELEPHONE		
BLDG	BUILDING	EMS	ENERGY MANAGEMENT SYSTEM	HV	HIGH VOLTAGE	MECH	MECHANICAL	PRI	PRIMARY	TEMP	TEMPERATURE		
C	CONDUIT OR CONTRACTOR	EMT	ELECTRICAL METALLIC TUBING	HVAC	HEATING, VENTILATION, AIR CONDITIONING	MFG	MANUFACTURER			TOA	TEST OFF AUTOMATIC		
CAB	CABINET	EOL	END OF LINE										

SHEET LIST TABLE

Sheet Number	Sheet Title
E1.0	GENERAL ELECTRICAL NOTES AND ABBREVIATIONS
~~E1.0~~	~~OVERALL SITE PLAN~~
E2.0	DEMOLITION – ELECTRICAL FLOOR PLAN
E3.0	PROPOSED POWER PLAN
E4.0	PROPOSED SIGNAL PLAN
E5.0	NEW LIGHTING PLAN
E5.1	LIGHTING SCHEDULE AND DETAILS
E6.0	EQUIPMENT POWER – ROOF PLAN
E7.0	PANEL SCHEDULE & SINGEL LINE DIAGRAM
E8.0	ELECTRICAL DETAILS
E9.1	COMPLAINCE FORMS
E9.2	COMPLAINCE FORMS

1

LDA DESIGNERS & ARCHITECTS
222 Central Court, Stockton, CA 95204

Architect:
LDA Partners, LLP
Designers & Architects
222 Central Court
Stockton, CA 95204
209.943.0405
www.ldapartners.com

Client:
LATHROP-MANTECA FIRE PROTECTION DISTRICT
19001 SOMERSTON PARKWAY
LATHROP CA 95330
209.941.5102

Project:
LATHROP-MANTECA FIRE PROTECTION DISTRICT
800 J STREET
LATHROP CA 95330

REGISTERED PROFESSIONAL ENGINEER
KEVIN L. PEZZONI
NO. 16269
EXP. 12/20
ELECTRICAL
STATE OF CALIFORNIA

PEZZONI ENGINEERING, INC.
CONSULTING ELECTRICAL ENGINEERS
1150 9TH Street Suite #1405 Modesto, CA 95354
PHONE: 209 . 554 . 4602
HTTP://WWW.PEZENGR.COM

PEZZONI ENGINEERING, INC. ã Copyrighted 2020

Project No.: 20-481
Drawn By: C.C.M.
Checked By: K.P.

No.	Description	Date	By
1	CITY PLAN CHECK #1 1ST REVIEW CYCLE	10/21/2020	CCM
2	PLAN CHECK #2/ ADDENDA #1	12/09/2020	CCM

3RD SUBMITTAL -BLDG. DEPT. 12/02/2020

GENERAL ELECTRICAL NOTES AND ABBREVIATIONS

E1.0

12/09/20 1:22:31 PM F:\20\481 LATHROP FIRE STATION #31\ENGR\SHEETS\481_E1.0 TITLE SHEET.DWG cmendez

SYMBOL ## PLAN NOTES:

1. DEMO (E) ATS INCLUDE CONTROL WIRING & ALL FEEDERS TO SOURCE.
2. DEMO (E) PANEL & FEEDER TO SOURCE.
3. DEMO (E) DOOR OPERATOR & CONTROLLER BY ROLL UP DOOR –REMOVE BRANCH CIRCUIT WIRING TO SOURCE.
4. (E) DOOR OPERATOR & CONTROLLER BY ROLL UP DOOR TO REMAIN –REMOVE BRANCH CIRCUIT WIRING TO SOURCE.
5. DEMO (E) HEATER & CONTROLS –REMOVE BRANCH CIRCUIT WIRING TO SOURCE.
6. DEMO (E) AC UNIT & CONTROLS –REMOVE BRANCH CIRCUIT WIRING TO SOURCE.
7. DEMO ALL (E) RECEPTACLES, LIGHTING, & LT SWITCHES WITHIN SPACE – REMOVE BRANCH CIRCUIT WIRING TO SOURCE.
8. (E) DISCONNECT TO AIR COMPRESSOR TO REMAIN – REMOVE BRANCH CIRCUIT WIRING TO SOURCE.
9. (E) DISCONNECT TO FUEL SYSTEM(S) TO REMAIN – REMOVE BRANCH CIRCUIT WIRING TO SOURCE.
10. DEMO (E) GENSET INCLUDE CONTROL WIRING & ALL FEEDERS TO SOURCE.
11. DEMO (E) EXTERIOR RECEPTACLE & BRANCH CIRCUIT WIRING TO SOURCE.
12. DEMO (E) EXTERIOR LIGHT FIXTURE & BRANCH CIRCUIT WIRING TO SOURCE.
13. (E) DEVICE TO REMAIN.

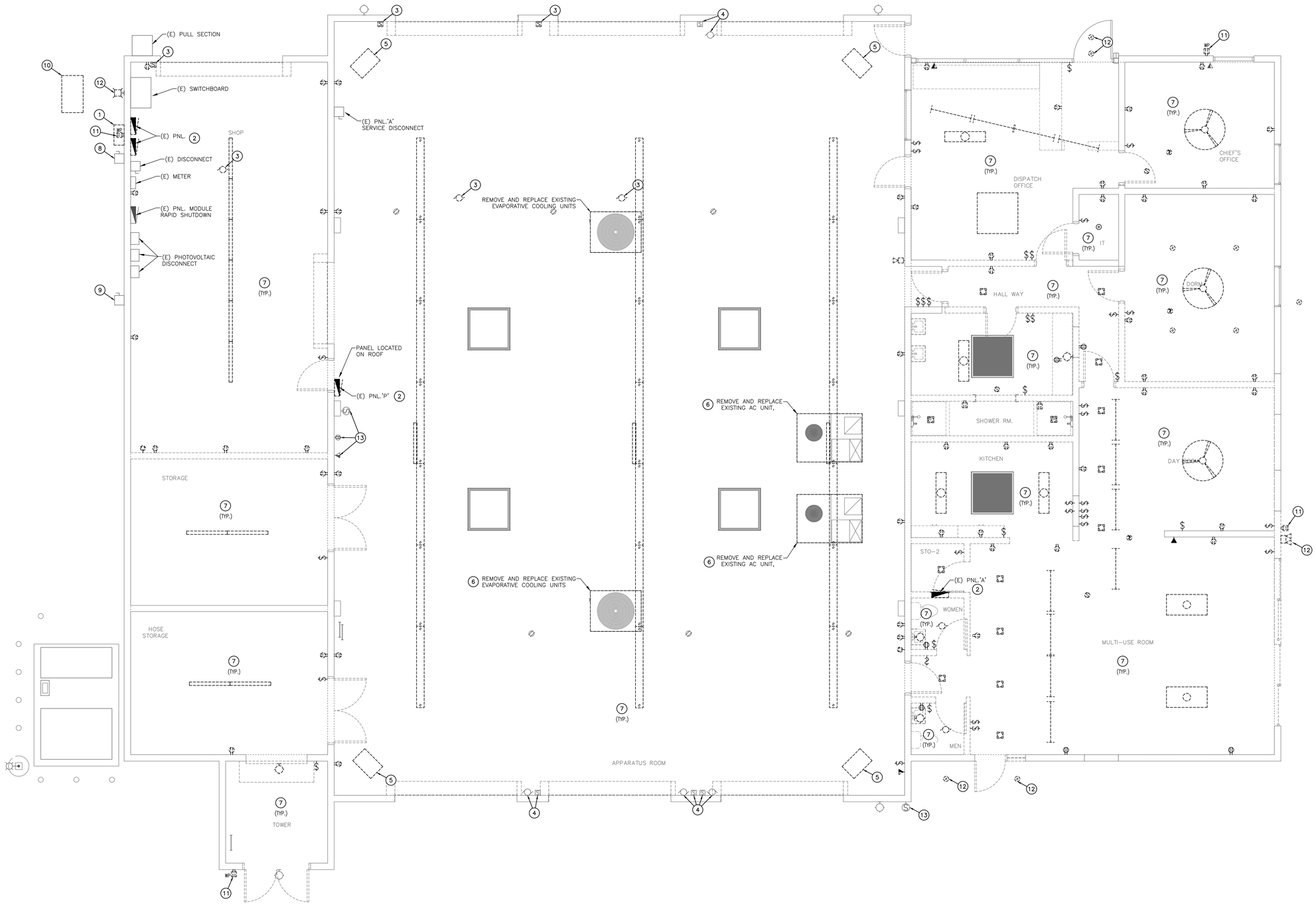

1 OVERALL ELECTRICAL PLAN – DEMOLITION
SCALE: 1/4"=1'-0"

LDA DESIGNERS & ARCHITECTS
222 Central Court, Stockton, CA 95204 | 209.943.0405 | www.ldapartners.com

Architect:
LDA Partners, LLP
Designers & Architects
222 Central Court
Stockton, CA 95204
209.943.0405
www.ldapartners.com

LICENSED ARCHITECT ERIC WILLIAM WOHLE C28388 September 2021 STATE OF CALIFORNIA

Client:
LATHROP-MANTECA FIRE PROTECTION DISTRICT
19001 SOMERSTON PARKWAY
LATHROP CA 95330
209.941.5102

Project:
LATHROP-MANTECA FIRE PROTECTION DISTRICT
800 J STREET
LATHROP CA 95330

REGISTERED PROFESSIONAL ENGINEER KEVIN L. PEZZONI NO. 16269 EXP. 12/20 ELECTRICAL STATE OF CALIFORNIA

PEZZONI ENGINEERING, INC.
CONSULTING ELECTRICAL ENGINEERS
1150 9TH Street Suite #1415 Modesto, CA 95354
PHONE: 209 . 554 . 4602
HTTP://WWW.PEZENGR.COM

PEZZONI ENGINEERING, INC. © Copyrighted 2020

Project No.: 20-481
Drawn By: C.C.M.
Checked By: K.P.

No.	Description	Date	By
1	CITY PLAN CHECK #1 1ST REVIEW CYCLE	10/21/2020	CCM
2	PLAN CHECK #2/ ADDENDA #1	12/09/2020	CCM

3RD SUBMITTAL -BLDG. DEPT.
12/02/2020

DEMOLITION - ELECTRICAL FLOOR PLAN

E2.0

12/09/20 1:22:36 PM F:\20\481 LATHROP FIRE STATON #31\ENGR\SHEETS\481_E2.0 DEMO ELECTRICAL PLAN.DWG cmendez

SYMBOL (#) PLAN NOTES:

1. E) MAIN SWITCHBOARD 'MSB' –INSTALL (N) DEVICES PER SINGLE LINE DIAGRAM
2. (N) ATS ON (N) PAD –SEE DETAIL 3/E8.0.
3. INSTALL (N) DEVICE SHOWN IN (E) BOX LOCATION –CONNECT ONTO (N) CKT SHOWN
4. CONNECT (N) HEATER UNIT– PROVIDE 1/2"C BETWEEN UNITS & LINE VOLTAGE T–STAT –SEE MECH. DRAWING FOR EXACT LOCATION
5. INSTALL (N) MOTORIZED DOOR OPERATOR (3/4HP–120V–30A) W/DISCONNECT SWITCH –INSTALL (N) 3/4"C W/#10 AWG. TO OPERATOR CONTROLLER AT +48"AFF TOP OF BOX. –SEE DETAIL 7/E8.0.
6. RECONNECT (E) MOTORIZED DOOR OPERATOR ONTO (N) CIRCUIT SHOWN
7. RECONNECT (E) O2 TANK FILLER DISCONNECT ONTO (N) CIRCUIT SHOWN W/(N) 3 #8 THWN CU & #8 CU GND
8. CORD DROP FOR APPARATUS TRUCK. VERIFY EXACT LOCATION WITH OWNER PRIOR TO ROUGH–IN.
9. (N) 4"C (EG POWER) & 3/4"C (EG CONTROLS 4 #14AWG) FROM EG–1 TO ATS .
10. (N) FAN COIL UNIT W/DISCONNECT SWITCH –PROVIDE 1/2"C TO T–STAT LOCATION.
11. PROVIDE DEDICATED CIRCUIT FOR 2–POST DATA RACK.
12. PROVIDE DEDICATE CIRCUIT FOR 2–POST RACK. MOUNT AT 7'–0" AFF.
13. MAIN COMMUNICATION TERMINAL CABINET, "MCTB", PROVIDE 8' HIGH X 3/4" THICK FIRE RETARDANT PLYWOOD AT WALLS SHOWN.
14. PROVIDE DEDICATED CIRCUITS FOR ELECTRICAL OVEN. VERIFY NEMA RATING PRIOR TO ROUGH–IN. PROVIDE RELAY TO SHUT–OFF CIRCUIT UPON CONTACT CLOSURE IN RADIO EQUIPMENT. POWER CONNECTION FOR GAS SOLENOID VALVE 120 /60 VAC. COORDINATE WITH CITY FIRE ALERTING VENDOR PRIOR TO ROUGH–IN.
15. PROVIDE (1)OUTLET LOW FOR GAS RANGE AD (1) HIGH FOR HOOD LIGHT/FAN. PROVIDE DEDICATED CIRCUIT. VERIFY EXACT LOCATION PRIOR TO ROUGH–IN. PROVIDE RELAY TO SHUT–OFF CIRCUIT UPON CONTACT CLOSURE IN RADIO EQUIPMENT. COORDINATE WITH CITY FIRE ALERTING VENDOR PRIOR TO ROUGH–IN.
16. PROVIDE DEDICATED CIRCUIT FOR DISPOSAL. MOUNT SWITCH RECEPTACLE BELOW SINK AND SWITCH ABOVE COUNTER.
17. PROVIDE DEDICATED CIRCUIT FOR DISHWASHER. MOUNT BELOW SINK.
18. PROVIDE DEDICATED CIRCUIT FOR REFRIGERATOR/FREEZER.
19. (N) FAN COIL UNIT SERVED FROM HEAT PUMP –PROVIDE (3) #10 AWG FOR POWER/CONTROL.
20. RELOCATE (E) INTERCOM UNIT TO STOREFRONT MULLION –RECONNECT ONTO (E) CABLES
21. RECONNECT (E) AIR COMPRESSOR W/2 #8 THWN CU & #8 CU GND.
22. CONNECT (N) PLYMOVENT BLOWER W/(N) DISCONNECT & INSTALL (N) 3/4"C W/2 #6 THWN CU & #8 CU GND.
23. (N) 14–30R (DRYER) RECP AT (E) BOX LOCATION W/(N) 3 #10 CU & #10 GND.
24. (N) 100A, 3P, N.F. DISCONNECT FOR (N) WASHER EXTRACTOR W/1 1/2" C., 3#3 THWN CU. & #8 CU. GND.
25. PROVIDE BLANK COVER & ACCESS TO (E) OUTLET BOXES.

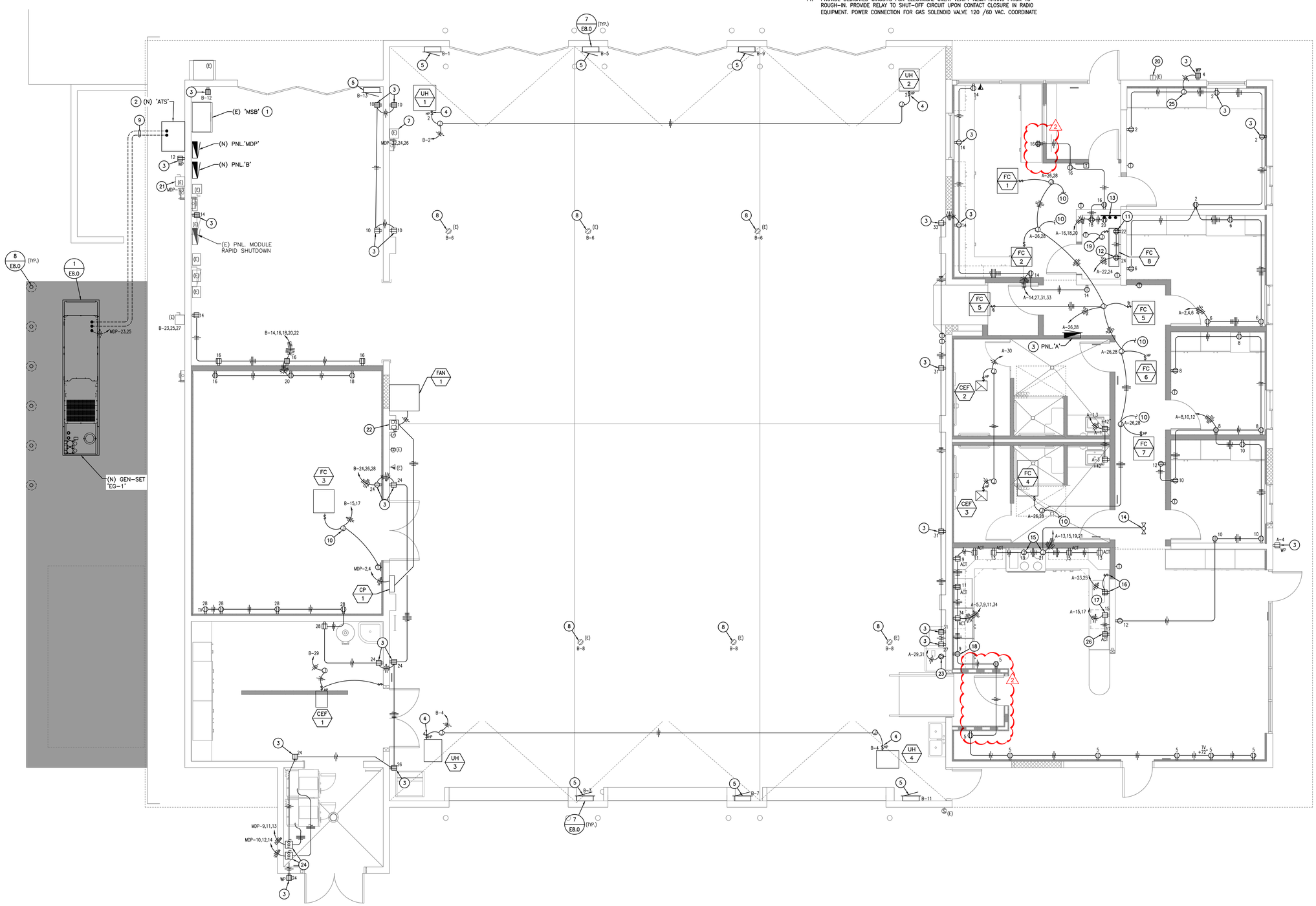

1 PROPOSED POWER PLAN

SCALE: 1/4"=1'–0"

LDA DESIGNERS & ARCHITECTS

Architect:
LDA Partners, LLP
Designers & Architects
222 Central Court
Stockton, CA 95204
209.943.0405
www.ldapartners.com

LICENSED ARCHITECT ERIC WILLIAM MOORE C28388 September 2021 STATE OF CALIFORNIA

Client:
LATHROP-MANTECA FIRE PROTECTION DISTRICT
19001 SOMERSTON PARKWAY
LATHROP CA 95330
209.941.5102

Project:
LATHROP-MANTECA FIRE PROTECTION DISTRICT
800 J STREET
LATHROP CA 95330

REGISTERED PROFESSIONAL ENGINEER KEVIN L. PEZZONI NO. 16269 EXP. 12/20 ELECTRICAL STATE OF CALIFORNIA

PEZZONI ENGINEERING, INC.
CONSULTING ELECTRICAL ENGINEERS
1150 9TH Street Suite #1405 Modesto, CA 95354
PHONE: 209 . 554 . 4602
HTTP://WWW.PEZENGR.COM

PEZZONI ENGINEERING, INC. © Copyrighted 2020

Project No.: 20-481
Drawn By: C.C.M.
Checked By: K.P.

No.	Description	Date	By
1	CITY PLAN CHECK #1 1ST REVIEW CYCLE	10/21/2020	CCM
2	PLAN CHECK #2/ ADDENDA #1	12/09/2020	CCM

3RD SUBMITTAL -BLDG. DEPT.
12/02/2020

PROPOSED POWER PLAN

E3.0

12/09/20 1:22:42 PM F:\20\481 LATHROP FIRE STATION #31\ENGR\SHEETS\481_E3.0 PROPOSED POWER PLAN.DWG cmendez

FIRE ALARM SCOPE:

CONTRACTOR SHALL PROVIDE A COMPLETE AND OPERATIONAL SYSTEM IN ACCORDANCE TO CBC 907.2.10.1 AS WELL AS MONITORING OF THE FIRE SPRINKLER SYSTEM (TAMPER, FLOW, AND PIV) AND CITY OF LATHROP ORDINANCES. SYSTEM OPERATION AND INSTALLATION SHALL CONFORM TO NFPA 72 WITH NOTIFICATION THROUGHOUT THE ENTIRE BUILDING. INCORPORATE FIELD VERIFY EXISTING CONDITIONS. VENDOR TO SUBMIT TO CITY OF LATHROP BUILDING DEPARTMENT FOR REVIEW AND APPROVAL, AND INCLUDE ALL COSTS WITHIN BID.

FOR PURPOSES OF BIDDING THE CONTRACTOR MAY ROUTE OPEN CABLE IN CONCEALED LOCATIONS. FOR THE APPARATUS BAY AREA AND TURNOUT ROOM ASSUME 200 L.F. OF 1" EMT FOR PROTECTION OF LOW VOLTAGE CABLING. FOR THE SITE DOUBLE CHECK TAMPER SWITCHES ASSUME 150 LINEAR FEET OF 3/4" PVC SCHEDULE 40 & ROUTING THE CONDUIT WITH THE FIRE SPRINKLER LINE.

SYMBOL (#) PLAN NOTES:

1. MAIN COMMUNICATION TERMINAL BACKBOARD, "MCTB".
2. PROVIDE FIRE ALARM CONNECTION TO FLOW AND TAMPER SWITCH AT FIRE RISER.
3. GENERATOR REMOTE ANNUNCIATOR PANEL. (COORDINATE EXACT LOCATION WITH CITY PRIOR TO ROUGH-IN). REFER TO SINGLE LINE DIAGRAM.
4. PROVIDE GROUND BUS (SEE DETAIL)
5. PROVIDE 2-POST RACK (VOICE AND DATA) WITH VERTICAL WIRE MANAGEMENT ON EACH SIDE. PROVIDE BLACK WITH ROUGH HOLES WITH RACK UNIT MARKER.
6. PROVIDE 2-POST RACK FOR FIRE ALERTING SYSTEM.
7. PROVIDE 18" BLACK LADDER TRAY AS SHOWN. PERIMETER END WALL BRACKETS AND MOUNTED TO THE TOP OF EACH RACK.
8. PROVIDE 24" SQUARE AND 8" DEEP TERMINAL CABINET, "TC" WITH HINGE DOOR AND WOOD BACKBOARD. MOUNT AS HIGH AS PRACTICAL.
9. RELOCATE (E) INTERCOM UNIT TO STOREFRONT MULLION -RECONNECT ONTO (E) CABLES.
10. INSTALL EXTENSION BOX & BLANK COVER W/ACCESS W/1" C. TO (N) OUTLET LOCATION.
11. PROVIDE A 1-GANG WP BOX @ +42"AFF FOR (F) ACCESS CONTROL CARD READER -CORE THROUGH WALL W/3/4"C.
12. PROVIDE A 1 GANG SURFACE BOX & TRANSITION INTO DOOR FRAME FOR (N) ELECTRIC LOCK -COORDINATE ROUGH-IN LOCATION W/DOOR HARDWARE & OWNER'S ACCESS CONTROL VENDOR.
13. PROVIDE (N) 3/4"EMT CONDUIT TO RM #104 FOR (F) ACCESS CONTROL CABLING.
14. PROVIDE GROMMET OPENING @ +42"AFF IN MULLION FOR (F) ACCESS CONTROL CARD -PROVIDE 3/4"C TO ATTIC SPACE ABOVE.
15. PROVIDE A 1-GANG WP BOX @ +42"AFF FOR (F) ACCESS CONTROL CARD READER -RISER UP EXTERIOR WALL & CORE THROUGH WALL INTO ATTIC SPACE W/3/4"C.
16. (N) 3/4"C INTO TOP OF DOOR FRAME FOR (N) ELECTRIC LOCK -COORDINATE ROUGH-IN LOCATION W/DOOR HARDWARE & OWNER'S ACCESS CONTROL VENDOR.

GENERAL NOTES:

A. SIGNAL AND COMMUNICATIONS SYSTEMS RACEWAYS AND BOXES. PROVIDE AND INSTALL 4" SQUARE RECESSED JUNCTION BOX WITH 1-GANG P-RING AND (1) 3/4" CONDUIT STUB TO ACCESSIBLE CEILING SPACE ABOVE AT EACH WALL TELEPHONE (VOICE), TELEVISION AND DATA OUTLET LOCATION SHOWN ON THE PLANS UNLESS OTHERWISE NOTED. FOR EACH COMBINATION VOICE/DATA OUTLET, PROVIDE AND INSTALL (1) 1" CONDUIT STUBS TO ACCESSIBLE CEILING SPACE. (SEE COMMUNICATION LEGEND OF SHEET E-0.1 AND DETAIL 1/E-0.5)

B. TELEPHONE WIRING: EACH TELEPHONE OUTLET LOCATION SHOWN ON THE PLANS SHALL HAVE A 4 PAIR, 24 GAUGE CONTINUOUS CABLE (CATEGORY 6) HOMERUN AND TERMINATED AT COMMUNICATION ROOM DATA/PHONE CABINET PATCH PANEL. TERMINATE AT OUTLET LOCATION WITH OWNER APPROVED JACK. VERIFY LOCATIONS WITH OWNER OR ARCHITECT PRIOR TO CONSTRUCTION. (SEE COMMUNICATION LEGEND OF SHEET E-0.1 AND DETAIL 1/E-0.5)

C. TELEVISION PREWIRE: EACH TELEVISION OUTLET SHOWN ON THE PLANS SHALL HAVE AN RG6U (WITH QUAD SHIELD) COAXIAL CABLE HOMERUN PREWIRED TO THE CATV TERMINAL BOARD IN COMMUNICATION ROOM LABEL AND LEAVE ADEQUATE SLACK FOR UTILITY CONNECTION. (SEE COMMUNICATION LEGEND OF SHEET E-0.1 AND DETAIL 1/E-0.5)

D. VOICE/DATA WIRING: EACH VOICE/DATA OUTLET LOCATION SHOWN ON THE PLANS SHALL HAVE 4 PAIR, 24 GAUGE, CATEGORY 6, UTP CABLES HOMERUN AND TERMINATED AT COMMUNICATION ROOM DATA/PHONE CABINET PATCH PANEL. TERMINATE AT OUTLET LOCATION WITH OWNER APPROVED JACK. VERIFY SYSTEM REQUIREMENTS WITH OWNER OR ARCHITECT PRIOR TO CONSTRUCTION.(SEE COMMUNICATION LEGEND OF SHEET E-0.1 AND DETAIL 1/E-0.5)

E. DEVICE LOCATIONS SHOWN ARE SCHEMATIC AND APPROXIMATE. EXACT LOCATIONS SHALL BE FIELD VERIFIED DURING ROUGH-IN WITH ARCHITECTURAL ELEVATIONS, CASEWORK SHOP DRAWINGS, FURNITURE, ETC. AND SHALL BE COORDINATED WITH OTHER TRADES TO AVOID CONFLICT WITH OTHER EQUIPMENT.

F. ELECTRICAL AND COMMUNICATIONS OUTLETS SHOWN IN THE SAME LOCATION, SHALL BE MOUNTED ON OPPOSITE SIDES OF THE SAME STUD BAY. COORDINATE BETWEEN ELECTRICAL AND COMMUNICATIONS PLANS.

G. PROVIDE DESIGN FOR TELECOMMUNICATIONS SPACES FOR CONTINUOUS CABLE RUNWAY FROM ALL PATHWAYS.

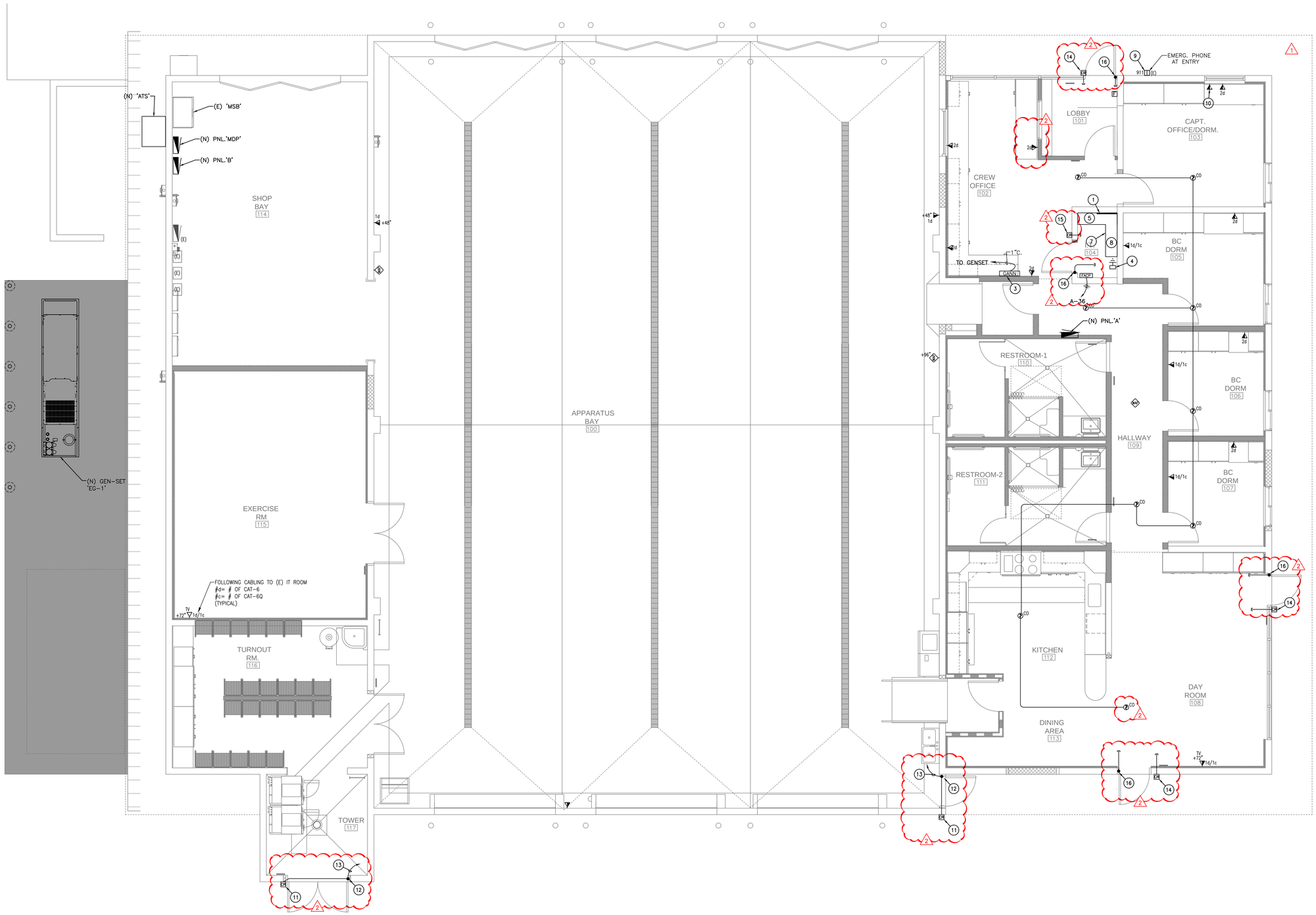

1 PROPOSED SIGNAL PLAN

SCALE: 1/4"=1'-0"

Architect:
LDA Partners, LLP
Designers & Architects
222 Central Court
Stockton, CA 95204
209.943.0405
www.ldapartners.com

ERIC WILLIAM MOHR — LICENSED ARCHITECT — C26388 — September 2021 — STATE OF CALIFORNIA

Client:
LATHROP-MANTECA FIRE PROTECTION DISTRICT
19001 SOMERSTON PARKWAY
LATHROP CA 95330
209.941.5102

Project:
LATHROP-MANTECA FIRE PROTECTION DISTRICT
800 J STREET
LATHROP CA 95330

KEVIN L. PEZZONI — REGISTERED PROFESSIONAL ENGINEER — NO. 16269 — EXP. 12/20 — ELECTRICAL — STATE OF CALIFORNIA

PEZZONI ENGINEERING, INC.
CONSULTING ELECTRICAL ENGINEERS
1150 9TH Street Suite #1405 Modesto, CA 95354
PHONE: 209.554.4602
HTTP://WWW.PEZZENGR.COM

PEZZONI ENGINEERING, INC. © Copyrighted 2020

Project No.: 20-481
Drawn By: C.C.M.
Checked By: K.P.

No.	Description	Date	By
1	CITY PLAN CHECK #1 1ST REVIEW CYCLE	10/21/2020	CCM
2	PLAN CHECK #2/ ADDENDA #1	12/09/2020	CCM

3RD SUBMITTAL -BLDG. DEPT. 12/02/2020

PROPOSED SIGNAL PLAN

E4.0

12/09/20 1:22:47 PM F:\20\481 LATHROP FIRE STATION #3\1\ENGR\SHEETS\481_E4.0 PROPOSED SIGNAL PLAN.DWG cmendez

GENERAL NOTES:

A. LIGHTING FIXTURE LOCATIONS SHOWN ARE SCHEMATIC. REFER TO ARCHITECTURAL PLANS (REFLECTED CEILING, ELEVATIONS, ETC.) FOR EXACT LOCATIONS AND MOUNTING HEIGHTS PRIOR TO ROUGH-IN.

B. REFER TO ARCHITECT'S REFLECTED CEILING PLAN(S) FOR CEILING HEIGHTS, TYPES, FINISHES, ETC. IN EACH AREA. VERIFY FLANGE TYPES, TRIM KITS, STEM LENGTHS, ETC. FOR ALL FIXTURES PRIOR TO SUBMITTALS.

C. CONFIRM LOCATION OF ALL DOORS SWINGS WITH ARCHITECTURAL PLANS PRIOR TO ROUGH-IN OF SWITCHES.

D. PROVIDE UN-SWITCHED HOT LEG OF ROOM LIGHTING BRANCH CIRCUIT TO EACH BATTERY POWERED EMERGENCY LIGHT AND EXIT SIGN FOR CONTINUOUS CHARGING.

E. THE LIGHTING DESIGN AND LIGHTING CONTROL DESIGN SHALL COMPLY WITH CALIFORNIA 2019 ENERGY EFFICIENCY STANDARDS FOR NON-RESIDENTIAL BUILDING AND 2019 CALIFORNIA GREEN BUILDING STANDARDS CODE.

F. EXHAUST FAN SHALL BE SWITCHED SEPARATELY FROM LIGHTS PER CENC 150.0(K)2B

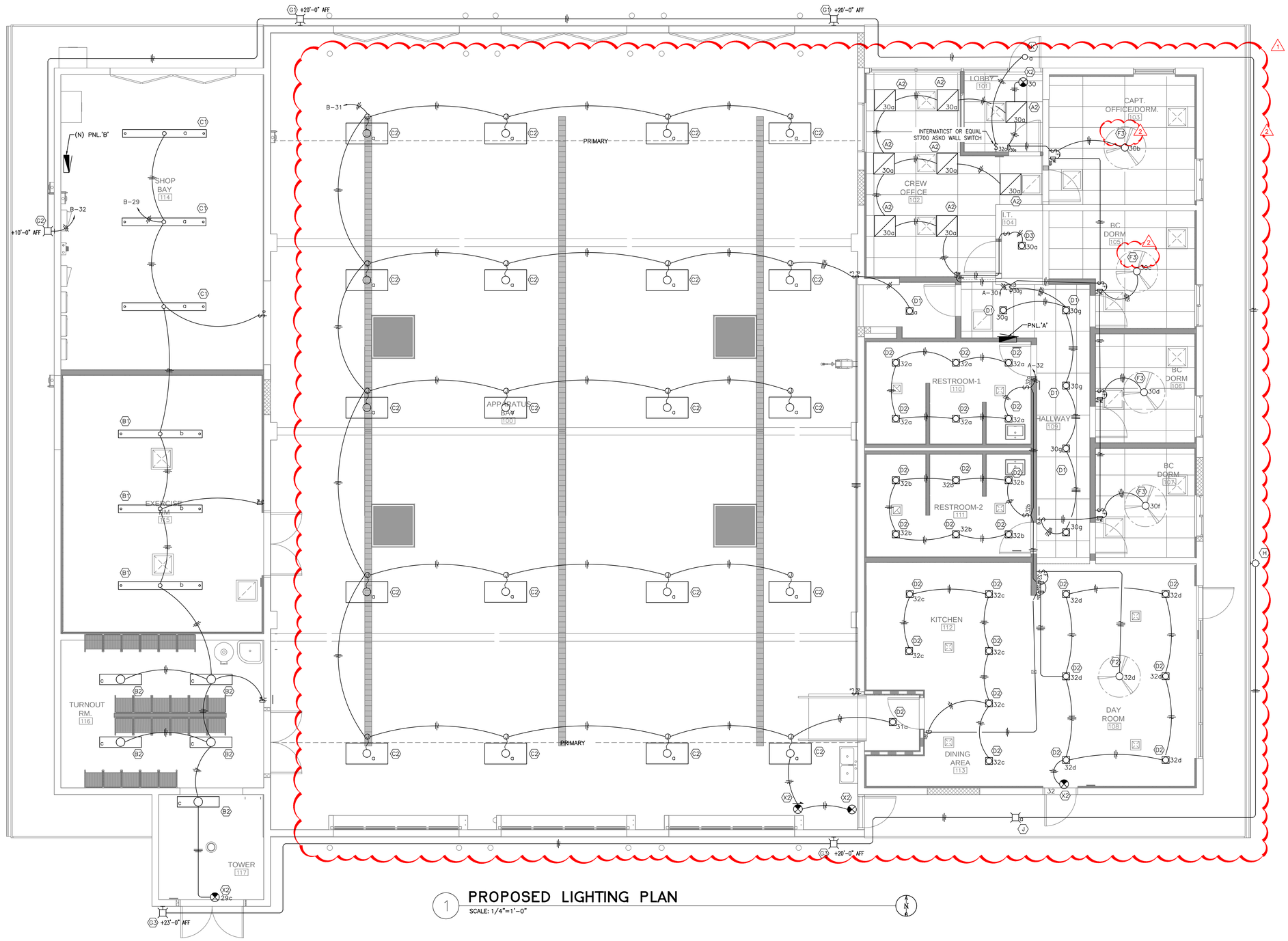

1 PROPOSED LIGHTING PLAN

SCALE: 1/4"=1'-0"

Architect:
LDA Partners, LLP
Designers & Architects
222 Central Court
Stockton, CA 95204
209.943.0405
www.ldapartners.com

LICENSED ARCHITECT ERIC WILLIAM WHITE C28388 September 2021 STATE OF CALIFORNIA

Client:
LATHROP-MANTECA FIRE PROTECTION DISTRICT
19001 SOMERSTON PARKWAY
LATHROP CA 95330
209.941.5102

Project:
LATHROP-MANTECA FIRE PROTECTION DISTRICT
800 J STREET
LATHROP CA 95330

REGISTERED PROFESSIONAL ENGINEER KEVIN L. PEZZONI NO. 16269 EXP. 12/20 ELECTRICAL STATE OF CALIFORNIA

PEZZONI ENGINEERING, INC.
CONSULTING ELECTRICAL ENGINEERS
1150 9TH Street Suite #1415 Modesto, CA 95354
PHONE: 209 . 554 . 4692
HTTP://WWW.PEZZNGR.COM

PEZZONI ENGINEERING, INC. Copyrighted 2020

Project No.: 20-481
Drawn By: C.C.M.
Checked By: K.P.

No.	Description	Date	By
1	CITY PLAN CHECK #1 1ST REVIEW CYCLE	10/21/2020	CCM
2	PLAN CHECK #2/ ADDENDA #1	12/09/2020	CCM

3RD SUBMITTAL -BLDG. DEPT. 12/02/2020

NEW LIGHTING PLAN

E5.0

12/09/20 1:22:53 PM F:\20\481 LATHROP FIRE STATION #31\ENGR\SHEETS\481_E5.0 NEW LTG PLAN.DWG cmendez

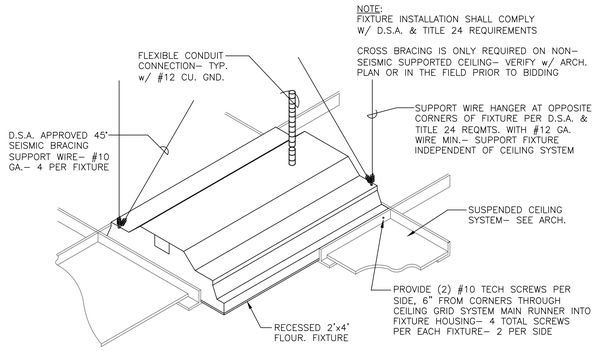

1 RECESSED FLUORESCENT FIXTURE AT SUSPENDED CEILING

SCALE: N.T.S.

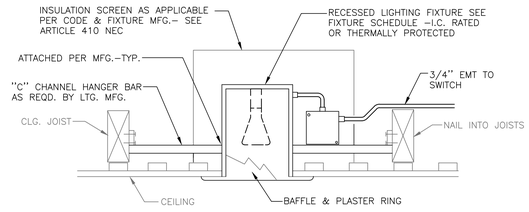

2 RECESSED FIXTURE INSTALLATION

SCALE: N.T.S.

LIGHTING FIXTURE SCHEDULE

TYPE	ILLUSTRATION	MANUFACTURER	CATALOG NO.	VOLTAGE	MAX. VA.	LAMPING	MOUNTING	DESCRIPTION
AZ		LA LIGHTING	GHL320-4-2L-FS-FFA-1DRDM-UNV-2-835	MVOLT	34.7	LED 35K	FLUSH T-BAR CEILING	2'X2' TROFFER COMMUNICATION ROOM
B1		SELECT LIGHTING	WBELR96L-565W7000LDMV35K	MVOLT	65	LED 35K	SURFACE	1'X8' WRAP VOLUMETRIC LENSE
B2		SELECT LIGHTING	WBELR48L-549W4800LDMV35K	MVOLT	48	LED 35K	SURFACE	1'X4' WRAP VOLUMETRIC LENSE
C1		LA LIGHTING	MHL310-12-8L-FSW-PA2-MS-10RDM-UNV-10835-HT	MVOLT	104.6	LED 35K	PENDANT TONG HANGER BRACKER (2 PER FIXTURE)	APP. BAY LIGHTING 96"L X 11.80"W X 2.68"D
C2		LA LIGHTING	EBY150-12-4L-PA2-SMA-MSPC-10RDM-UNV-1-835-HT	MVOLT	79.3	LED 35K	PENDANT TONG HANGER BRACKER (2 PER FIXTURE)	SIMILAR TO C1 BUT WITH 360 DEGREE HIGH MOUNT MOTION SENSOR WITH DIMMING. PRE-WIRED. FIXTURES DIM 50 PERCENT WHEN SPACE IS UNOCCUPIED.
D1		NORA	nHMICD-612LE1 w/nRM-612/L1235WW	120	16	LED 35K	RECESSED	6" DIAMETER DOWNLIGHT IC RATED
D2		NORA	nHMICD-412LE1 w/nRM-411L8535WW	120	11	LED 30K	RECESSED	4" DIAMETER DOWNLIGHT IC RATED BATHROOM/SHOWER WET LOCATION RATED
D3		NORA	nHM-620LE1 w/nRM-620L1235WW	MVOLT	26	LED 35K	RECESSED	6" LED DOWNLIGHT OFFICE/VESTIBULE
D4		PATHWAY LIGHTING	6VLFLX 1100 120 35K 6VLEDMD ROSCO RED 4690 RED LENSE	MVOLT	15	LED 35K	RECESSED	6" LED DOWNLIGHT WITH RED GEL HOLDER THAT ATTACHES TO THE EMITTING FACE LIGHTS ONLY TURNS "ON" DURING ALERTING
E1		SUNPARK	FLS3390-3000K	MVOLT	23	LED 27K	WALL	27" LED VANITY SATIN NICKEL
F1		MINKAARIE	FS17L-PN	120	15 LT + 62 FAN	LED	SURFACE/ROD	48" CEILING FAN WITH LIGHT, FAN/LIGHT CONTROL BEDROOMS
F2		MINKAARIE	FB28-BNWH	120	16 LT + 66 FAN	LED	SURFACE/ROD	52" CEILING FAN WITH LIGHT, FAN/LIGHT CONTROL DINING AND DAYROOM
F3		MINKAARIE	FS17L-PN	120	15 LT + 62 FAN	N/A	SURFACE/ROD	42" CEILING FAN WITH LIGHT FAN/LIGHT CONTROL FITNESS
G1		LITHONIA	DSXW1LED-20C-530 -40K-TFTM-120V -P1RHJFC3V -DDBXD	35		LED 40K	SURFACE	SURFACE MOUNTED -SEE PLANS FOR MOUNTING HEIGHTS
G2		LITHONIA	DSXW1LED-20C-530 -40K-T2M-120V -P1R1FCV3 -ELCW	35		LED 40K	SURFACE	SURFACE MOUNTED -SEE PLANS FOR MOUNTING HEIGHTS
G3		LITHONIA	DSXW1LED-20C-1000 -40K-TFTM-120V -P1RHJFC3V -DDBXD	73		LED 40K	SURFACE	SURFACE MOUNTED -SEE PLANS FOR MOUNTING HEIGHTS
H		LITHONIA	WDGE1LED-P2-40K -80CRI-VF-MVOLT -PE-DDBXD	15		LED 40K	SURFACE	SURFACE MOUNTED -SEE PLANS FOR MOUNTING HEIGHTS
J		LITHONIA	DSXSCLED-10C-700 -40K-ASY-120V -P1R3FCV2V -DDBXD	26		LED 40K	SURFACE	SURFACE MOUNTED -SEE PLANS FOR MOUNTING HEIGHTS
K		BEGA	#66 982 +K4 - BRZ	12.2		LED 40K	SURFACE	RECESSED MOUNTED
X1		MULE	CEL-1-B-GW-HW-R	120		N/A	WALL	EDGE-LIT LED EXIT SIGNS WITH 90 MINUTE BATTERY BACK UP INTERIOR SPACES
X2		MULE	MDC-1-G-W-W	120		N/A	WALL	DIE CAST LED COMBO WITH 90 MINUTE BATTERY BACK-UP APP. BAY

LIGHTING FIXTURE SCHEDULE NOTES

A. ILLUSTRATIONS AND/OR DIMENSIONS ARE APPROXIMATIONS ONLY INTENDED TO REPRESENT BASIC FIXTURE TYPE; DO NOT USE AS EXACT INFORMATION SOURCE. REFER TO MANUFACTURER CUT SHEETS.

B. EXACT LOCATIONS: BEFORE CONSTRUCTION, VERIFY WITH ARCHITECT EXACT LOCATIONS AND MOUNTING HEIGHTS OF ALL LIGHT FIXTURES. SEE ARCHITECTURAL REFLECTED CEILING PLANS AND ELEVATIONS AS APPLICABLE.

C. FIXTURE BRANCH CIRCUIT THROUGH-WIRING: VERIFY AND COMPLY WITH FIXTURE MANUFACTURER RESTRICTIONS AS DETERMINED BY UL. & NEC.

D. FINAL PLACEMENT AND AIMING OF EXTERIOR ADJUSTABLE FLOOD OR SPOT FIXTURES SHALL BE DETERMINED AFTER DARK WITH OWNER OR ARCHITECT PRESENT. PREARRANGE TIME AND PROVIDE TEMPORARY POWER AS REQUIRED.

E. COORDINATE COLOR FINISH WITH OWNER/ARCHITECT.

F. CEILING FANS CONTROLS MUST BE HARD WIRED. NO REMOTE CONTROLS ARE NOT ACCEPTABLE.

DESIGNERS & ARCHITECTS
209.943.0405 | FAX 209.943.0407

Architect:
LDA Partners, LLP
Designers & Architects
222 Central Court
Stockton, CA 95204
209.943.0405
www.ldapartners.com

LICENSED ARCHITECT ERIC WILLIAM WHITE C28388 September 2021 STATE OF CALIFORNIA

Client:
LATHROP-MANTECA FIRE PROTECTION DISTRICT
19001 SOMERSTON PARKWAY
LATHROP CA 95330
209.941.5102

Project:
LATHROP-MANTECA FIRE PROTECTION DISTRICT
800 J STREET
LATHROP CA 95330

REGISTERED PROFESSIONAL ENGINEER KEVIN L. PEZZONI No. 16269 EXP. 12/20 ELECTRICAL STATE OF CALIFORNIA

PEZZONI ENGINEERING, INC.
CONSULTING ELECTRICAL ENGINEERS
1150 9TH Street Suite #1415 Modesto, CA 95354
PHONE: 209 . 554 . 4602
HTTP://WWW.PEZENGR.COM

PEZZONI ENGINEERING, INC. © Copyrighted 2020

Project No.: 20-481
Drawn By: C.C.M.
Checked By: K.P.

No.	Description	Date	By
1	CITY PLAN CHECK #1 1ST REVIEW CYCLE	10/21/2020	CCM
2	PLAN CHECK #2/ ADDENDA #1	12/09/2020	CCM

3RD SUBMITTAL -BLDG. DEPT.
12/02/2020

LIGHTING SCHEDULE AND DETAILS

E5.1

12/09/20 1:22:54 PM F:\20\481 LATHROP FIRE STATION #31\ENGR\SHEETS\481_E5.0 NEW LTG PLAN.DWG cmendez

SYMBOL (##) PLAN NOTES:

1. CONNECT CU-2 W/(N) 3/4"C w/2 #10 THWN CU & #10 GND -ROUTE (N) 3/4"C W/#10 AWG CONDUCTORS TO FC-1 BELOW.
2. CONNECT CU-1 W/(N) 1"C w/3 #6 THWN CU & #10 GND.
3. (N) EVAP COOLER -PROVIDE (N) NEMA 2-SPEED FNVR STARTER DISCONNECT FOR FAN MOTOR & EXTEND RECP CKT TO PUMP/EC CONTROL POWER -ROUTE (N) 3/4"C w/120V CONTROL TO T-STAT BELOW W/5 #12AWG CONDUCTORS -COORDINATE W/MECH.

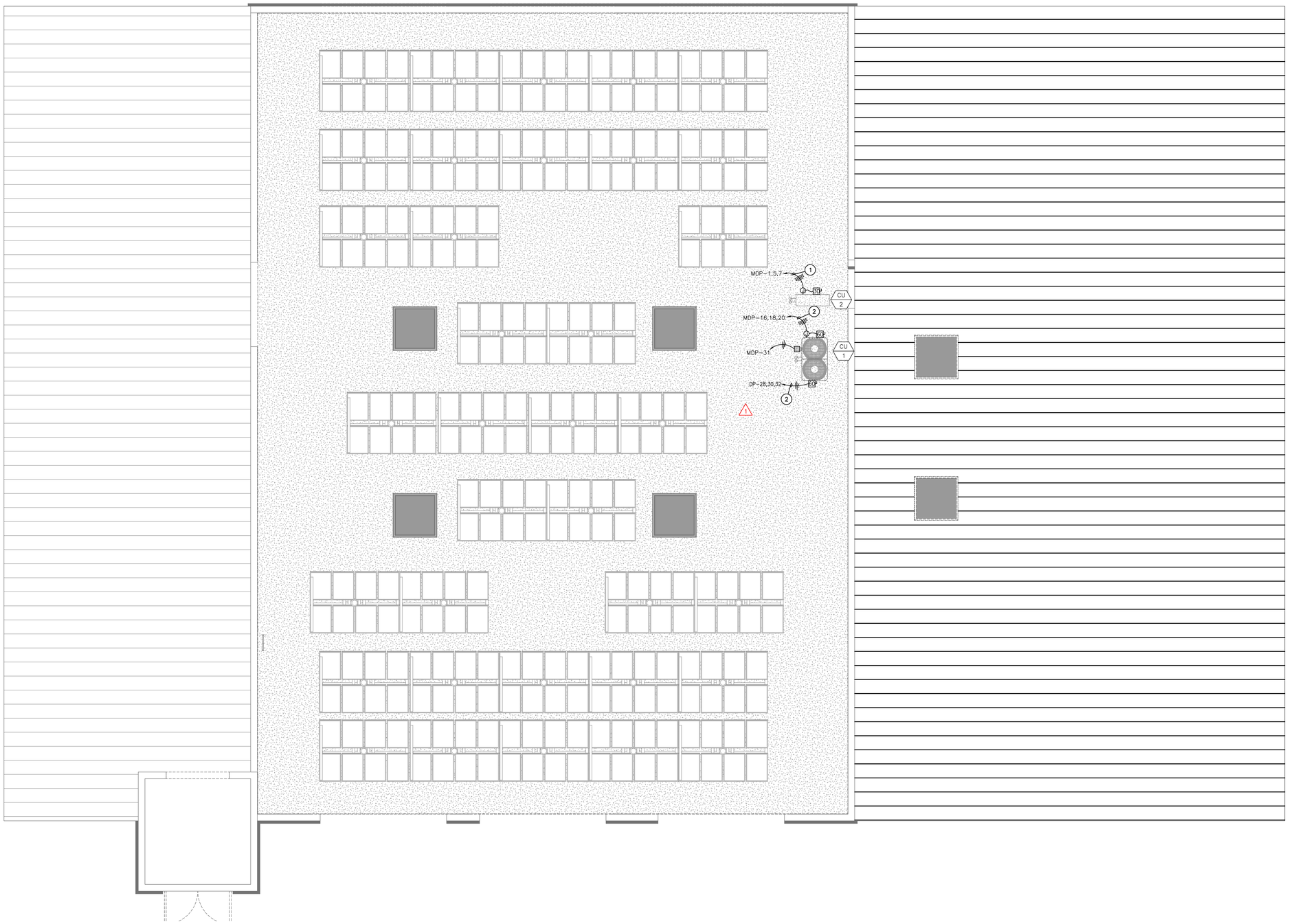

1 ROOF PLAN – EQUIPMENT POWER

SCALE: 1/4"=1'-0"

LDA DESIGNERS & ARCHITECTS

Architect:
LDA Partners, LLP
Designers & Architects
222 Central Court
Stockton, CA 95204
209.943.0405
www.ldapartners.com

LICENSED ARCHITECT — ERIC WILLIAM MOATE — C28388 September 2021 — STATE OF CALIFORNIA

Client:
LATHROP-MANTECA FIRE PROTECTION DISTRICT
19001 SOMERSTON PARKWAY
LATHROP CA 95330
209.941.5102

Project:
LATHROP-MANTECA FIRE PROTECTION DISTRICT
800 J STREET
LATHROP CA 95330

REGISTERED PROFESSIONAL ENGINEER — KEVIN L. PEZZONI — NO. 16269 EXP. 12/20 — ELECTRICAL — STATE OF CALIFORNIA

PEZZONI ENGINEERING, INC.
CONSULTING ELECTRICAL ENGINEERS
1508 8TH Street Suite #1421 Modesto, CA 95354
PHONE: 209 . 554 . 4602
HTTP://WWW.PEZENGR.COM

PEZZONI ENGINEERING, INC. © Copyrighted 2020

Project No.: 20-481
Drawn By: C.C.M.
Checked By: K.P.

No.	Description	Date	By
1	CITY PLAN CHECK #1 1ST REVIEW CYCLE	10/21/2020	CCM
2	PLAN CHECK #2/ ADDENDA #1	12/09/2020	CCM

3RD SUBMITTAL -BLDG. DEPT.
12/02/2020

EQUIPMENT POWER - ROOF PLAN

E6.0

12/09/20 1:22:59 PM F:\20\481 LATHROP FIRE STATION #3\ENGR\SHEETS\481_E6.0 EQUIP POWER - ROOF PLAN.DWG cmendez

PANELBOARD SCHEDULE

PANEL: A — BUS RATING: 200 A — VOLTAGE: 120/208 V. — PHASE: 1ø — WIRE: 3 — W/INTEGRAL TVSS — SCCR: 22k — BUSSING: Cu — LOCATION: 109 — NEMA TYPE: 1 — MOUNTING: FLUSH

CKT	DESCRIPTION	BRKR	TYPE	LOAD	A (va)		C (va)	LOAD	TYPE	BRKR	DESCRIPTION	CKT
1	RECP -110	20/1A	R	180	900			720	R	20/1AF	RECPS -103	2
3	RECP -111	20/1	R	180			540	360	R	20/1	RECP -EXT NORTH	4
5	RECPS -108,113	20/1A	R	1080	1980			900	R	20/1AF	RECPS -105	6
7	RECP -112 REFRIG	20/1AG	R	1200			2100	900	R	20/1AF	RECPS -106	8
9	RECPS -112 CTR	20/1A	R	360	1260			900	R	20/1AF	RECPS -107	10
11	RECPS -112 CTR	20/1A	R	360			1080	720	R	20/1AF	RECPS -108,109	12
13	RECPS -112 CTR	20/1A	R	360	900			540	R	20/1	RECPS -102	14
15	RECPS -112 CTR	20/1A	R	360			1080	720	R	20/1	RECPS -102	16
17	RECPS -112 CTR	20/1A	R	180	900			720	N	20/1	RECP -104	18
19	HOOD	20/1A	N	400			1120	720	N	20/1	RECP -104	20
21	GAS SHUT-OFF	20/1A	C	100	820			720	N	20/1	RECP -104	22
23	RECP -112 G.D.	20/1AG	R	1200			1920	720	N	20/1	RECP -104	24
25	RECP -112 DW	20/1AG	R	1200	2700			1500	M	15/2	FC-1, 2, 4, 5, 6, 7 /BC-1	26
27	RECP -100 WASHER	20/1	R	1200			2700	1500	M	/		28
29	RECP -100 DRYER	30/2	R	2500	3200			700	L	20/1AF	LTG -101-12, CEF-2,3	30
31		/	R	2500			3000	500	L	20/1AF	LTG -108,10,11,13	32
33	RECPS -100	20/1	R	540	1740			~~1200~~	~~R~~	~~20/1AF~~	~~RECP -112 REFRIG~~	34
35	RECPS -100	20/1	R	180			680	500	C	20/1L	FACP	36
37					0							38
39							0					40
41					0							42
					14400		14220					

CONTINUOUS (C):	750 VA
NON-CONTINUOUS (N):	3280 VA
RECEP. (R):	15270 VA
MOTOR (M) OR (M1):	3000 VA
LIGHTING (L):	1200 VA
KITCHEN >1750W (K):	0 VA

MCB: –
MLO: YES

MAX. PHASE @125% = 150.0 A.
DEMAND TOTAL = 23.5 kVA
= 113.0 A.

DEMAND CALC. PER ART 220

NOTE:
[L] DENOTES LOCK ON DEVICE
[A] DENTOES AFCI PROTECTION DEVICE
[G] DENTOES GFCI PROTECTION DEVICE
[AG] DENTOES AFCI & GFCI PROTECTION DEVICE
[N] DENOTES SWITCHED NEUTRAL

PANELBOARD SCHEDULE

PANEL: B — BUS RATING: 200 A. — VOLTAGE: 120/208 V. — PHASE: 1ø — WIRE: 3 — W/INTEGRAL TVSS — SCCR: 22k — BUSSING: Cu — LOCATION: 114 — NEMA TYPE: 1 — MOUNTING: SURFACE

CKT	DESCRIPTION	BRKR	TYPE	LOAD	A (va)		C (va)	LOAD	TYPE	BRKR	DESCRIPTION	CKT
1	ROLL UP -BAY1 NORTH	30/1	M	1660	2610			950	M	20/1	UH-1,2	2
3	ROLL UP -BAY1 SOUTH	30/1	M	1660			2610	950	M	20/1	UH-3,4	4
5	ROLL UP -BAY2 NORTH	30/1	M	1660	2200			540	R	20/1G	RECPS -100 CLG	6
7	ROLL UP -BAY2 SOUTH	30/1	M	1660			2200	540	R	20/1G	RECPS -100 CLG	8
9	ROLL UP -BAY3 NORTH	30/1	M	1660	2380			720	R	20/1	RECPS -100,114	10
11	ROLL UP -BAY3 SOUTH	30/1	M	1660			2020	360	R	20/1	RECPS -114, EXT	12
13	ROLL UP -SHOP	30/1	M	1660	2020			360	R	20/1	RECPS -114	14
15	FC-3	15/2	M	150			690	540	R	20/1	RECPS -114	16
17		/	M	150	1750			1600	R	20/1	RECP -115	18
19	SPARE	20/1	L	1730			3330	1600	R	20/1	RECP -115	20
21	SPARE	20/1	L	600	2200			1600	R	20/1	RECP -115	22
23	FUEL SYSTEM	20/1N	M	1100			1820	720	R	20/1	RECP -100,115,116	24
25	FUEL SYSTEM	20/1N	M	1100	2000			900	R	20/1	RECP -115 ICE MACH	26
27	FUEL SYSTEM	20/1N	N	500			1400	900	R	20/1	RECP -115,116	28
29	LTG 114-17 & CEF-1	20/1	L	825	1185			360	R	20/1	RECPS-11, EXT	30
31	LTG 100	20/1	L	1615			1919	304	L	20/1	LTG -EXTERIOR	32
33	SPARE	20/1			0					20/1	SPARE	34
35							0			20/2	SPARE	36
37					0							38
39							0					40
41					0							42
					16345		15989					

CONTINUOUS (C):	0 VA
NON-CONTINUOUS (N):	500 VA
RECEP. (R):	10370 VA
MOTOR (M) OR (M1):	16020 VA
LIGHTING (L):	5074 VA
KITCHEN >1750W (K):	0 VA

MCB: –
MLO: YES

MAX. PHASE @125% = 170.3 A.
DEMAND TOTAL = 32.0 kVA
= 153.7 A.

DEMAND CALC. PER ART 220

PANELBOARD SCHEDULE

PANEL: MDP — BUS RATING: 600 A. — VOLTAGE: 120/240 V. — PHASE: 3ø — WIRE: 4 — W/INTEGRAL TVSS — SCCR: 22k — BUSSING: Cu — LOCATION: 114 — NEMA TYPE: 1 — MOUNTING: SURFACE

CKT	DESCRIPTION	BRKR	TYPE	LOAD	A (va)	B (va)	C (va)	LOAD	TYPE	BRKR	DESCRIPTION	CKT
1	AIR COMPRESSOR	40/2	M	3360	8160			4800	M	60/2	PLYMOVENT BLOWER	2
3	5HP	/	M	3360		8160		4800	M	/	7.5HP	4
5							0					6
7					0							8
9	WASHER EXTRACTOR-1	80/3	N	9850		19700		9850	N	80/3	WASHER EXTRACTOR-2	10
11		/	N	9850			19700	9850	N	/		12
13		/	N	9850	19700			9850	N	/		14
15	CU-1	25/2	M	2200		6375		4175	M1	50/3	CU-1A	16
17		/	M	2200			6375	4175	M1	/		18
19					4175			4175	M1	/		20
21						3880		3880	M	40/3	MAKO BAC06H	22
23	EG-1 BATT	20/1	C	900			4780	3880	M	/	10HP	24
25	EG-1 HEATER	20/1	N	1500	5380			3880	M	/		26
27						4175		4175	M1	45/3	CU-1A	28
29	SPARE	20/1					4175	4175	M1	/		30
31	RECPS -ROOF	20/1	R	180	4355			4175	M1	/		32
33						0						34
35							0					36
37					0							38
39	PANEL "B"	200/3	N	16345		30745		14400	N	150/2	PANEL "A"	40
41		/	N	15989			30209	14220	N	/		42
					41770	73035	65239					

CONTINUOUS (C):	1125 VA
NON-CONTINUOUS (N):	121554 VA
RECEP. (R):	180 VA
MOTOR (M) OR (M1):	63673 VA
LIGHTING (L):	0 VA
KITCHEN >1750W (K):	0 VA

MCB: –
MLO: YES

MAX. PHASE @125% = 760.8 A.
DEMAND TOTAL = 186.5 kVA
= 448.7 A.

DEMAND CALC. PER ART 220

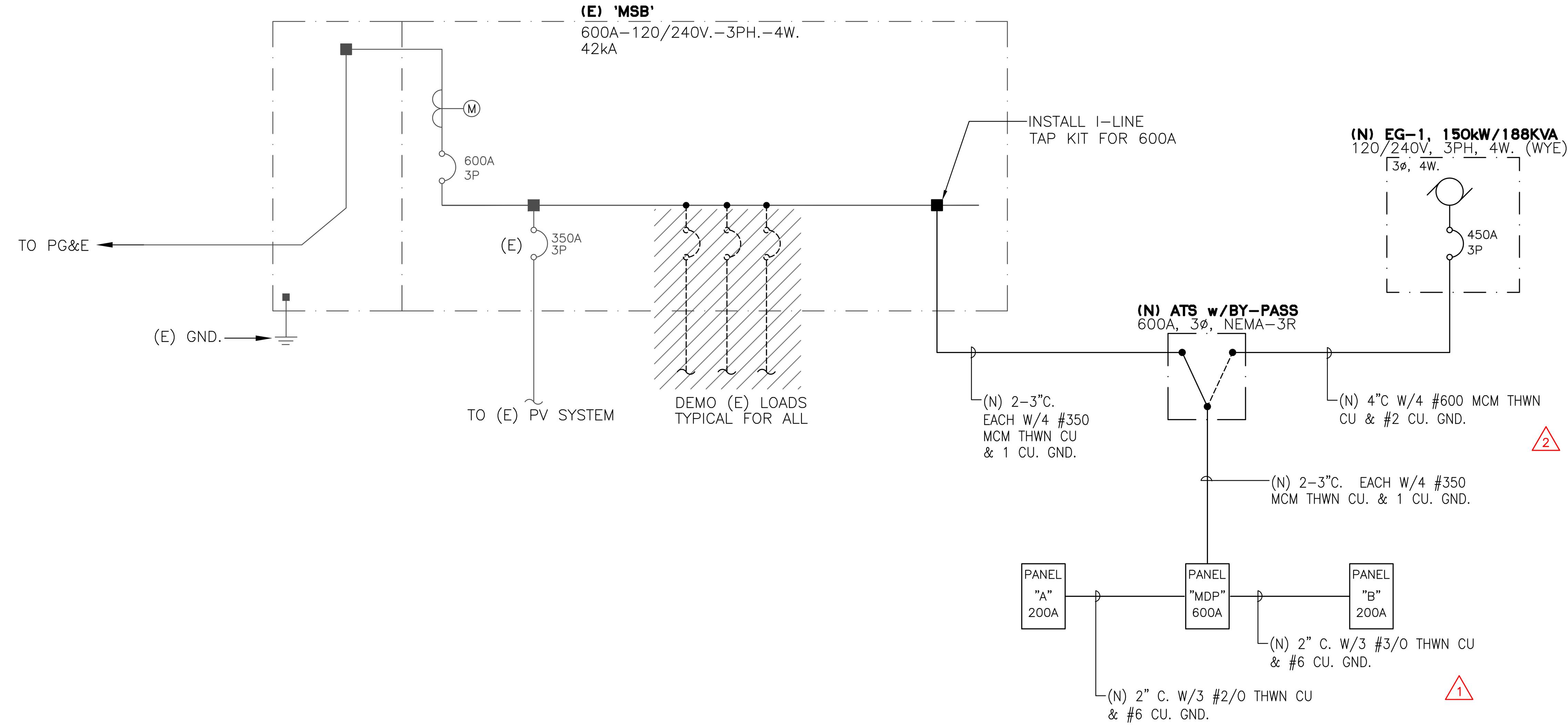

GENERAL NOTES

A. COMPLETE SYSTEM OF POWER 120/208V, THREE PHASE, 4-WIRE, WIRING DISTRIBUTIONS INCLUDING PANELBOARDS AND ALL BRANCH CIRCUITS AND OUTLETS FOR THE LIGHTING, MECHANICAL, PLUMBING, MISCELLANEOUS EQUIPMENTS AND CONVENIENCE OUTLETS.

B. PER CALIFORNIA TITLE 24 SECTION 130.5, WIRING PROVISIONS MUST BE MEET FOR DISAGGREGATION OF THE ELECTRICAL CIRCUITS, THE OPTIONAL METERING HAS NOT BEEN PROVIDED FOR THIS PROJECT.

C. ALL SWITCHES, CIRCUIT BREAKERS AND OTHER EQUIPMENT, AS SPECIFIED, SHALL HAVE TERMINATION PROVISIONS LISTED AND IDENTIFIED FOR USE WITH 75 DEG. CONDUCTORS, AND ALL FEEDER CONDUCTORS, AND CONDUITS, ARE SIZE BASED ON USE OF 75 DEG. C COPPER WIRES TYPE SHWN/THHN.

D. ALL EQUIPMENT SHALL HAVE AN APPROVED TESTING LABORATORY LABEL ATTACHED [UL, CSA, ETC.] (CEC 110-2).

E. ALL BOXES AND ENCLOSURES (INCLUDING TRANSFER SWITCHES, GENERATORS, AND POWER PANELS) FOR EMERGENCY CIRCUITS SHALL BE PERMANENTLY MARKED SO THEY WILL BE READILY IDENTIFIED AS A COMPONENT OF AN EMERGENCY CIRCUIT OR SYSTEM, PER NEC 700-9(A).

F. EMERGENCY LIGHTING SYSTEM (GENERATOR AND AUTOMATIC TRANSFER) AND EXIT LIGHTS SHALL BE CHECKED AND APPROVED BY THE FIRE DEPARTMENT BEFORE THE APPROVAL OF THE FINAL PLANS.

G. IN ACCORDANCE WITH CEC 110.16. PROVIDE ARC FLASH PROTECTION WARNING LABELS ON EACH SWITCHBOARD, PANELBOARD, AND TRANSFORMER. LABELS SHALL BE PER ANSI Z535.4 GUIDLINES. (SEE DETAIL 2 ON THIS SHEET).

H. SERIES RATED PANELBOARDS ARE NOT PERMITTED. ALL PANELS ARE BOLT-ON BREAKERS. LOAD CENTERS ARE NOT PERMITTED.

1 SINGLE LINE DIAGRAM

SCALE: NTS

SPECIAL SEISMIC CERTIFICATION (SSC) SUBMITTAL TABLE

APPLICABLE ELECTRICAL EQUIPMENT TYPE OR NONSTRUCTURAL COMPONENT	EMERGENCY GENERATOR	EMERGENCY GENERATOR FUEL TANK	EMERGENCY AUTOMATIC TRANSFER SWITCHES	EMERGENCY POWER SWITCHGEAR: INCLUDING ELECTRICAL DISTRIBUTION SWITCHBOARDS, TRANSFORMERS, AND BRANCH PANELS.	FIRE ALARM CONTROL PANEL "FACP"	COMMUNICATION RACK(S)
APPLICABLE TO THE PROJECT:	YES	YES	YES	YES	YES	YES

SEISMIC QUALIFICATION:
SUPPLIER SHALL PROVIDE MANUFACTURERS CERTIFICATION THAT THE EQUIPMENT LISTED ABOVE FOR USE ON THIS PROJECT HAS BEEN REVIEWED AND CERTIFIED BY THE MANUFACTURER TO MEET THE CURRENT CRITERIA FOR SPECIAL SEISMIC CERTIFICATION IN COMPLIANCE WITH CBC 1705.12.3. INCLUDE SEISMIC COMPANION ANCHORAGE REQUIREMENTS FROM THE TESTING AND AS APPROVED BY THE MANUFACTURER. IT SHALL BE THE RESPONSIBILITY OF THE CONTRACTOR TO FURNISH DOCUMENTATION FROM THE MANUFACTURER VERIFYING COMPLIANCE DURING SUBMITTAL PROCESS.

GENERATOR POWER SYSTEM NOTES

A. A PERMANENT PLAQUE SHALL BE PLACED AT THE NORMAL SERVICE EQUIPMENT DENOTING THE TYPE & LOCATION OF THE ON-SITE EMERGENCY STANDBY POWER GENERATOR (CEC 700-8, 701-9, 702-8) THE PLAQUE SHALL IDENTIFY THE CONNECTION OF THE GROUNDING ELECTRODE CONDUCTOR WHEN THAT CONNECTION IS AT A LOCATION REMOTE FROM THE GENERATOR. (CEC 700-8, 701-9, 702-8).

B. WIRING FROM AN EMERGENCY SOURCE OR EMERGENCY SOURCE DISTRIBUTION OVERCURRENT PROTECTION TO EMERGENCY LOADS SHALL BE KEPT ENTIRELY INDEPENDENT OF ALL OTHER WIRING AND EQUIPMENT AND SHALL BE IDENTIFIED BY PERMANENT MARKING, EXCEPT AS NOTED IN (1) THROUGH (5), PER CEC 700-9(B).

C. THE FOLLOWING EQUIPMENT SHALL BE UL LISTED AS INDICATED:
STATIONARY GENERATORS 600V OR LESS IN NON-HAZARDOUS LOCATIONS - (UL2200)
NON EMERGENCY UNINTERRUPTIBLE POWER SYSTEMS (UPS) - (UL1778)
EMERGENCY RATED UNINTERRUPTIBLE POWER SYSTEMS (UPS) - (UL924)
EMERGENCY LIGHTING AND POWER EQUIPMENT (UL 924)
TRANSFER SWITCH EQUIPMENT (UL 1008)
EMERGENCY RATED LOW LEVEL PATH MARKING AND LIGHTING SYSTEMS - (UL1994)

2 GENERATOR SYSTEM NOTES & CERTIFICATION

SCALE: N.T.S.

LDA
DESIGNERS & ARCHITECTS
222 Central Court, Stockton, CA 95204 | 209.943.0405 p | 209.943.0415 f |

Architect:
LDA Partners, LLP
Designers & Architects
222 Central Court
Stockton, CA 95204
209.943.0405
www.ldapartners.com

LICENSED ARCHITECT ERIC WILLIAM WOHLE C28388 September 2021 STATE OF CALIFORNIA

Client:
LATHROP-MANTECA FIRE PROTECTION DISTRICT
19001 SOMERSTON PARKWAY
LATHROP CA 95330
209.941.5102

Project:
LATHROP-MANTECA FIRE PROTECTION DISTRICT
800 J STREET
LATHROP CA 95330

REGISTERED PROFESSIONAL ENGINEER KEVIN L. PEZZONI NO. 16269 EXP. 12/20 ELECTRICAL STATE OF CALIFORNIA

PEZZONI ENGINEERING, INC.
CONSULTING ELECTRICAL ENGINEERS
1150 9TH Street Suite #1415 Modesto, CA 95354
PHONE: 209 . 554 . 4602
HTTP://WWW.PEZENGR.COM

PEZZONI ENGINEERING, INC. ã Copyrighted 2020

Project No.: 20-481
Drawn By: C.C.M.
Checked By: K.P.

No.	Description	Date	By
1	CITY PLAN CHECK #1 1ST REVIEW CYCLE	10/21/2020	CCM
2	PLAN CHECK #2/ ADDENDA #1	12/09/2020	CCM

3RD SUBMITTAL -BLDG. DEPT.
12/02/2020

PANEL SCHEDULE &
SINGLE LINE DIAGRAM

E7.0

12/09/20 1:23:03 PM F:\20\481 LATHROP FIRE STATON #31\ENGR\SHEETS\481_E7.0 PNL SCH - SINGLE LINE DIA.DWG cmendez

CAJ 3283

System No. C-AJ-3283

Classified by Underwriters Laboratories, Inc. to UL 1479 and CAN/ULC-S115

ANSI/UL1479 (ASTM E814)	CAN/ULC S115
F Rating — 2 Hr	F Rating — 2 Hr
T Ratings — 0 and 1/2 Hr (See Item 2)	FT Ratings — 0 and 1/2 Hr (See Item 2)
L Rating At Ambient — Less Than 1 CFM/Device (See Item 2)	FH Rating — 2 Hr
L Rating At 400° F — Less Than 1 CFM/Device (See Item 2)	FTH Ratings — 0 and 1/2 Hr (See Item 2)
	L Rating At Ambient — Less Than 5.1 L/s/Device (See Item 2)
	L Rating At 400°F — Less Than 5.1 L/s/Device (See Item 2)

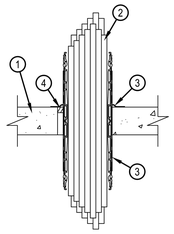

1. Floor or Wall Assembly — Min 2-1/2 in. (64 mm) thick reinforced lightweight or normal weight (100-150 pcf or 1600-2400 kg/m3) concrete. Wall may also be constructed of any UL Classified Concrete Blocks*. Opening in floor or wall to be max 3 in. (76 mm) diam for 2" device and max 5 in. (127 mm) diam for 4" device.
   See Concrete Blocks (CAZT) category in the Fire Resistance Directory for names of manufacturers.

1A. Floor Assembly — (Not Shown) — As an alternate to Item 1, fire-rated unprotected concrete and steel floor assembly may be used. Floor assembly to be constructed of the materials and in the manner described in the individual D900 Series Floor-Ceiling Design in the UL Fire Resistance Directory and shall include the following construction features:
   A. Concrete — Min 2-1/2 in. (64 mm) thick reinforced lightweight or normal weight (100-150 pcf or 1600-2400 kg/m3) concrete.
   B. Steel Floor and Form Units — Composite or noncomposite max 3 in. (76 mm) deep fluted galv units as specified in the individual Floor-Ceiling design. Opening in floor or wall to be max 3 in. (76 mm) diam for 2" device and max 5 in. (127 mm) diam for 4" device.

Hilti Firestop Systems

Reproduced by HILTI, Inc. Courtesy of Underwriters Laboratories, Inc. October 07, 2019

Page: 1 of 2

WJ 1020

System No. W-J-1020

Classified by Underwriters Laboratories, Inc. to UL 1479 and CAN/ULC-S115

ANSI/UL1479 (ASTM E814)	CAN/ULC S115
T Rating — 0 and 1/4 Hr (See Item 3B)	F Rating — 2 Hr
L Rating At Ambient — Less Than 1 CFM/sq ft	FT Rating — 0 and 1/4 Hr (See Item 3B)
L Rating At 400 F — 4 CFM/sq ft	FH Rating — 2 Hr
	FTH Rating — 0 and 1/4 Hr (See Item 3B)
	L Rating At Ambient — Less Than 1 CFM/sq ft
	L Rating At 400 F — 4 CFM/sq ft

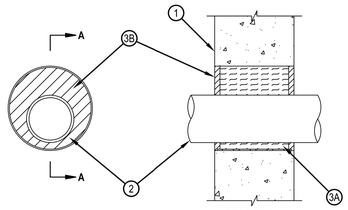

SECTION A-A

1. Wall Assembly — Min 5 in. (127 mm) thick reinforced lightweight or normal weight (100-150 pcf or 1600-2400 kg/m3) concrete. Wall may also be constructed of any UL Classified Concrete Blocks*. Max diam of opening is 8 in. (203 mm).
   See Concrete Blocks (CAZT) category in the Fire Resistance Directory for names of manufacturers.
2. Through Penetrants — One metallic pipe, conduit or tubing to be installed either concentrically or eccentrically within the firestop system. Pipe, conduit or tubing to be rigidly supported on both sides of wall assembly. The annular space between pipe, conduit or tubing and periphery of opening shall be min 3/4 in. (19 mm) to max 3-1/2 in. (89 mm). The following types and sizes of metallic pipes, conduits or tubing may be used:
   A. Conduit — Nom 4 in. (102 mm) diam (or smaller) electrical metallic tubing or steel conduit.
   B. Copper Tubing — Nom 4 in. (102 mm) diam (or smaller) Type L (or heavier) copper tubing.
   C. Copper Pipe — Nom 4 in. (102 mm) diam (or smaller) Regular (or heavier) copper pipe.

Hilti Firestop Systems

Reproduced by HILTI, Inc. Courtesy of Underwriters Laboratories, Inc. January 22, 2015

Page: 1 of 2

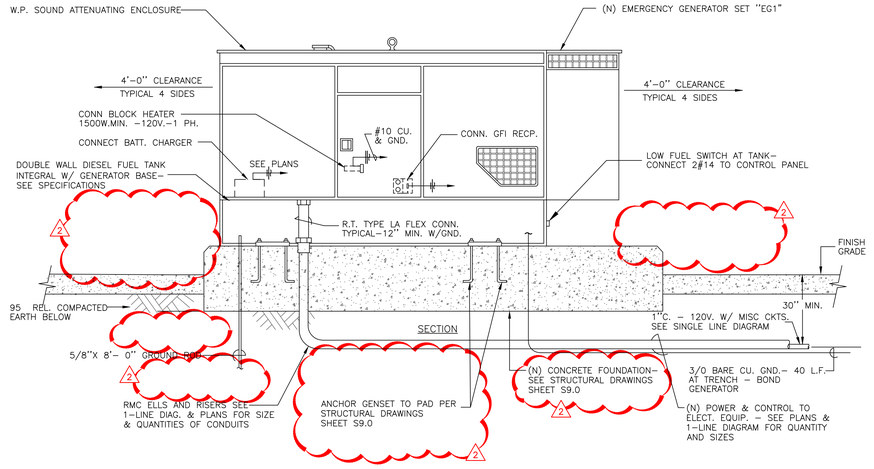

1 NEW GENERATOR & FOUNDATION

SCALE: N.T.S.

6 FLOOR OR WALL PENETRATION

SCALE: NONE

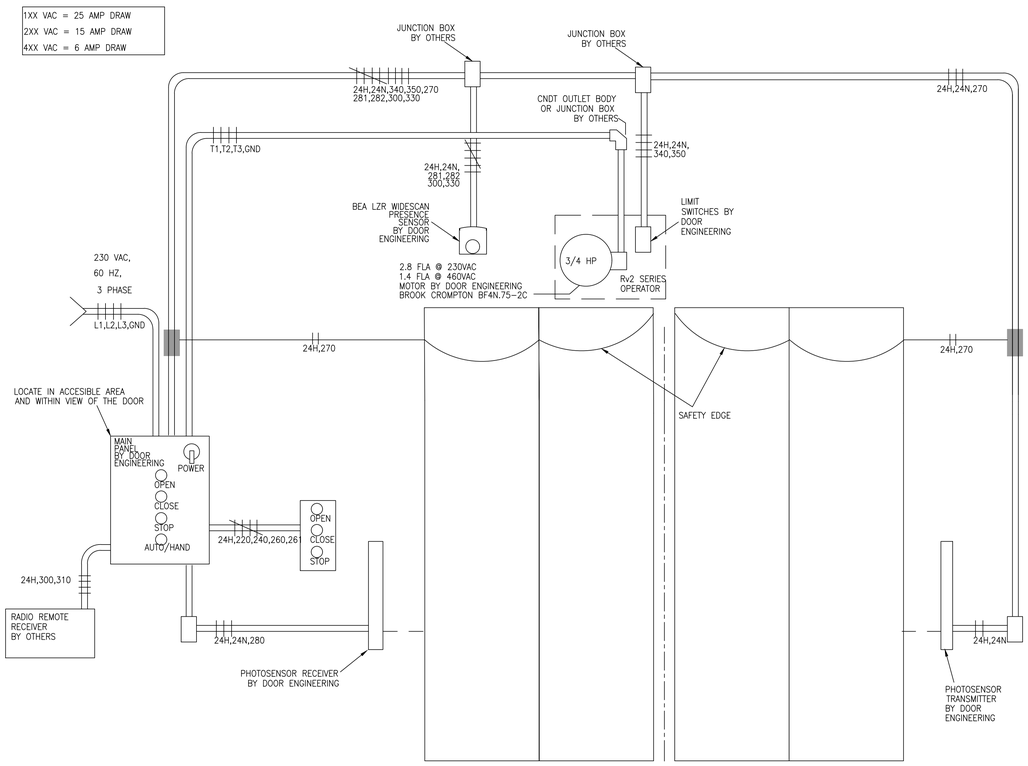

7 AUTOMATIC BI-FOLDING BAY DOORS INSTALLATION -TYPICAL

SCALE: N.T.S.

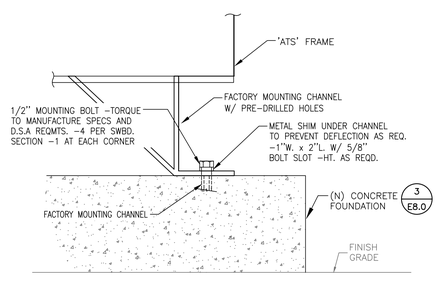

4 ATS ANCHORAGE

SCALE: NONE

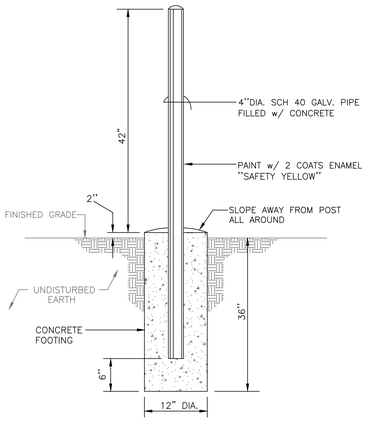

8 NON-REMOVABLE GUARD POST -TYPICAL

SCALE: N.T.S.

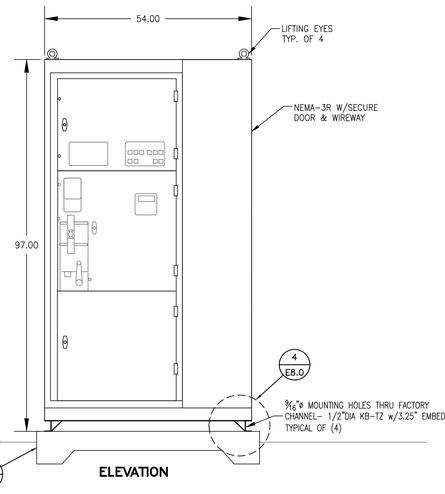

ELEVATION

2 AUTOMATIC TRANSFER SWITCH

SCALE: NONE

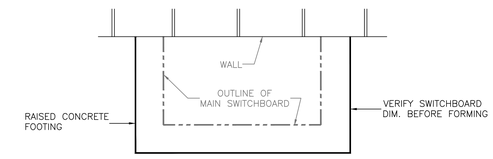

PLAN VIEW

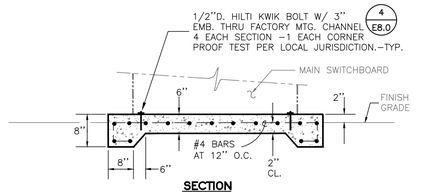

SECTION

3 'ATS' FOUNDATION AT WALL

SCALE: NONE

LDA DESIGNERS & ARCHITECTS

Architect:
LDA Partners, LLP
Designers & Architects
222 Central Court
Stockton, CA 95204
209.943.0405
www.ldapartners.com

LICENSED ARCHITECT ERIC WILLIAM WAHL C28388 September 2021 STATE OF CALIFORNIA

Client:
LATHROP-MANTECA FIRE PROTECTION DISTRICT
19001 SOMERSTON PARKWAY
LATHROP CA 95330
209.941.5102

Project:
LATHROP-MANTECA FIRE PROTECTION DISTRICT
800 J STREET
LATHROP CA 95330

REGISTERED PROFESSIONAL ENGINEER KEVIN L. PEZZONI NO. 16269 EXP. 12/20 ELECTRICAL STATE OF CALIFORNIA

PEZZONI ENGINEERING, INC.
CONSULTING ELECTRICAL ENGINEERS
1150 9TH Street Suite #1405 Modesto, CA 95354
PHONE: 209 . 554 . 4602
HTTP://WWW.PEZZENGR.COM

PEZZONI ENGINEERING, INC. Δ Copyrighted 2020

Project No.: 20-481
Drawn By: C.C.M.
Checked By: K.P.

No.	Description	Date	By
1	CITY PLAN CHECK #1 1ST REVIEW CYCLE	10/21/2020	CCM
2	PLAN CHECK #2/ ADDENDA #1	12/09/2020	CCM

3RD SUBMITTAL -BLDG. DEPT. 12/02/2020

ELECTRICAL DETAILS

E8.0

12/09/20 1:23:08 PM F:\20\481 LATHROP FIRE STATION #3\ENGR\SHEETS\481_E8.0 ELECTRICAL DETAILS.DWG cmendez

H. INDOOR LIGHTING CONTROLS (Not Including PAFs)

*Table Instructions: Please include lighting controls for conditioned and unconditioned spaces in this table. When an option having a * is selected, the notes section of this table must be completed. The lighting controls section of the Compliance Summary Table on the first page will show "DOES NOT COMPLY" if the notes are left blank.*

Building Level Controls

01	02	03	
Mandatory Demand Response §110.12(c)	Shut-Off Controls §130.1(c)	Field Inspector	
		Pass	Fail
Not Required ≤ 10,000 SF	See Area/Space Level Controls	☐	☐

Area Level Controls

04	05	06	07	08	09	10	11	12	
Area Description	Complete Building or Area Category Primary Function Area	Area Controls §130.1(a)	Multi-Level Controls §130.1(b)	Shut-Off Controls §130.1(c)	Primary/Skylit Daylighting §130.1(d)	Secondary Daylighting §140.6(d)	Interlocked Systems §140.6(a)1	Field Inspector	
								Pass	Fail
APPARATUS	General Commercial and Industrial Work - Precision	Manual ON/ OFF	NA: ≤ 80% LP (alt only)	Occ. Sensor	Included	Included	☐	☐	☐
SHOP BAY	General Commercial and Industrial Work - Precision	Manual ON/ OFF	NA: ≤ 80% LP (alt only)	Occ. Sensor	NA	NA	☐	☐	☐
EXERCISE	Exercise Center, Gymnasium	Manual ON/ OFF	Dimmer	Occ. Sensor	NA	NA	☐	☐	☐
TURNOUT/TOWER	Locker/Dressing Room	Manual ON/ OFF	Dimmer	Occ. Sensor	NA	NA	☐	☐	☐

*NOTES: Controls with a * require a note in the space below explaining how compliance is achieved.
EX: Conference 1: Primary/Skylight Daylighting: Exempt because less than 120 watts of general lighting;
EXCEPTION 1 to §130.1(d)2

13

Plan Sheet Showing Daylit Zones:

I. LIGHTING POWER ALLOWANCE: COMPLETE BUILDING OR AREA CATEGORY METHODS

Table Instructions: Complete the table for each area complying using the Complete Building or Area Category Methods per §140.6(b). Indicate if additional lighting power allowances per §140.6(c) or adjustments per §140.6(a) are being used.

Conditioned Spaces

Controls Compliance (See Table H for Details)	COMPLIES
Rated Power Reduction Compliance (See Table Q for Details)	Not Applicable

D. EXCEPTIONAL CONDITIONS

This table is auto-filled with uneditable comments because of selections made or data entered in tables throughout the form.

No exceptional conditions apply to this project.

E. ADDITIONAL REMARKS

This table includes remarks made by the permit applicant to the Authority Having Jurisdiction.

F. INDOOR LIGHTING FIXTURE SCHEDULE

Table Instructions: Include all permanent designed lighting and all portable lighting in offices.

Designed Wattage: Conditioned Spaces

01	02	03	04	05	06	07	08	09	10	
Name or Item Tag	Complete Luminaire Description	Modular (Track) Fixture	Small Aperture & Color Change[A]	Watts per luminaire[B]	How Wattage is determined	Total number luminaires	Exempt per §140.6(a)3	Design Watts	Field Inspector	
									Pass	Fail
C1	HIGH BAY	☐	☐	104.6	Mfr. Spec[C]	3	☐	313.8	☐	☐
C2	INDUSTRIAL	☐	☐	79.3	Mfr. Spec[C]	20	☐	1,586	☐	☐
B1	WRAP	☐	☐	65	Mfr. Spec[C]	3	☐	195	☐	☐
B2	WRAP	☐	☐	48	Mfr. Spec[C]	5	☐	240	☐	☐
						Total Designed Watts CONDITIONED SPACES:		**2,334.8**		

[A] *FOOTNOTE: Design Watts for small aperture and color changing luminaires which qualify per §140.6(a)4B is adjusted to be 75% of their rated wattage. Table F automatically makes this adjustment, the permit applicant should enter full rated wattage in column 05.*
[B] *Authority Having Jurisdiction may ask for Luminaire cut sheets to confirm wattage used for compliance per §130.0(c) Wattage used must be the maximum rated for the luminaire, not the lamp.*

G. MODULAR LIGHTING SYSTEMS

This Section Does Not Apply

A. GENERAL INFORMATION

01	Project Location (city)	LATHROP	04	Total Conditioned Floor Area (ft²)	
02	Climate Zone	12	05	Total Unconditioned Floor Area (ft²)	
03	Occupancy Types Within Project (select all that apply):		06	# of Stories (Habitable Above Grade)	1

☐ Office ☐ Retail ☐ Warehouse ☐ Hotel/Motel ☐ School ☐ Support Areas
☐ Parking Garage ☐ High-Rise Residential ☐ Relocatable ☐ Healthcare ☑ Other (write in): FIRE STATION

B. PROJECT SCOPE

Table Instructions: Include any lighting systems that are within the scope of the permit application and are demonstrating compliance using the prescriptive path outlined in §140.6 or §141.0(b)2 for alterations. WARNING: Changing the Calculation Method in this table will result in the deletion of data previously input. If you need to change the calculation method, please open a new form or use "Save As".

Scope of Work	Conditioned Spaces		Unconditioned Spaces	
01	02	03	04	05
My Project Consists of (check all that apply):	Calculation Method	Area (ft²)	Calculation Method	Area (ft²)
☑ New Lighting System	Area Category			
☐ Altered Lighting System				
Total Area of Work (ft²)				

C. COMPLIANCE RESULTS

Table Instructions: If any cell on this table says "DOES NOT COMPLY" or "COMPLIES with Exceptional Conditions" refer to Table D. for guidance.

Lighting in conditioned and unconditioned spaces must not be combined for compliance per §140.6(b)1.	Allowed Lighting Power per §140.6(b) (Watts)						Adjusted Lighting Power per §140.6(a) (Watts)					Compliance Results
	01	02	03	04	05		06	07	08			09
	Complete Building §140.6(c)1	Area Category §140.6(c)2	Area Category Additional §140.6(c)2G (+)	Tailored §140.6(c)3 (+)	**Total Allowed** (Watts)		Total Designed (Watts)	Adjustments PAF Control Credits §140.6(a)2 (-)	**Total Adjusted** (Watts) *Includes Adjustments			**05 Must be ≥08** §140.6
	(See Table I)	(See Table I)	(See Table J)	(See Table K)			(See Table F)	(See Table P)				
Conditioned:		4,497.7			= **4,497.7**	≥	2,334.8		= **2,334.8**			**COMPLIES**
Unconditioned:					=	≥			=			

Table Continued

U. DECLARATION OF REQUIRED CERTIFICATES OF ACCEPTANCE

Table Instructions: Selections have been made based on information provided in previous tables of this document. If any selection needs to be changed, please explain why in Table E. Additional Remarks. These documents must be provided to the building inspector during construction and any with "-A" in the form name must be completed through an Acceptance Test Technician Certification Provider (ATTCP). For more information visit: http://www.energy.ca.gov/title24/attcp/providers.html

YES	NO	Form/Title	Field Inspector	
			Pass	Fail
◉	○	NRCA-LTI-02-A - Must be submitted for occupancy sensors and automatic time switch controls.	☐	☐
◉	○	NRCA-LTI-03-A - Must be submitted for automatic daylight controls.	☐	☐
○	◉	NRCA-LTI-04-A - Must be submitted for demand responsive lighting controls.	☐	☐
○	◉	NRCA-LTI-05-A - Must be submitted for institutional tuning power adjustment factor (PAF).	☐	☐
○	◉	NRCA-ENV-03-F - Must be submitted for daylighting design power adjustment factors (PAF).	☐	☐

Q. RATED POWER REDUCTION COMPLIANCE FOR ALTERATIONS

This Section Does Not Apply

R. 80% LIGHTING POWER FOR ALTERATIONS - CONTROLS EXCEPTIONS

This Section Does Not Apply

S. DAYLIGHT DESIGN POWER ADJUSTMENT FACTOR (PAF)

This Section Does Not Apply

T. DECLARATION OF REQUIRED CERTIFICATES OF INSTALLATION

Table Instructions: Selections have been made based on information provided in previous tables of this document. If any selection needs to be changed, please explain why in Table E. Additional Remarks. These documents must be provided to the building inspector during construction and can be found online at https://ww2.energy.ca.gov/title24/2019standards/2019_compliance_documents/Nonresidential_Documents/NRCI/

YES	NO	Form/Title	Field Inspector	
			Pass	Fail
◉	○	NRCI-LTI-01-E - Must be submitted for all buildings	☐	☐
○	◉	NRCI-LTI-02-E - Must be submitted for a lighting control system, or for an Energy Management Control System (EMCS), to be recognized for compliance.	☐	☐
○	◉	NRCI-LTI-04-E - Must be submitted for two interlocked systems serving an auditorium, a convention center, a conference room, a multipurpose room, or a theater to be recognized for compliance.	☐	☐
○	◉	NRCI-LTI-05-E - Must be submitted for a Power Adjustment Factor (PAF) to be recognized for compliance.	☐	☐
○	◉	NRCI-LTI-06-E - Must be submitted for additional wattage installed in a video conferencing studio to be recognized for compliance.	☐	☐

01	02	03	04	05	06	
Area Description	Complete Building or Area Category Primary Function Area	Allowed Density (W/ft²)	Area (ft²)	Allowed Wattage (Watts)	Additional Allowances / Adjustment	
					Area Category	PAF
APPARATUS BAY	General Commercial and Industrial Work - Precision	0.85	4,286	3,643.1	☐	☐
SHOP BAY	General Commercial and Industrial Work - Precision	0.85	532	452.2	☐	☐
EXERCISE ROOM	Exercise Center, Gymnasium	0.5	470	235	☐	☐
TURNOUT ROOM/TOWER	Locker/Dressing Room	0.45	372	167.4	☐	☐
			TOTAL:	**5,660**	**4,497.7**	See Tables J or P for detail

J. ADDITIONAL LIGHTING ALLOWANCE: AREA CATEGORY METHOD QUALIFYING LIGHTING SYSTEM

This Section Does Not Apply

K. TAILORED METHOD GENERAL LIGHTING POWER ALLOWANCE

This Section Does Not Apply

L. ADDITIONAL LIGHTING ALLOWANCE: TAILORED WALL DISPLAY

This Section Does Not Apply

M. ADDITIONAL LIGHTING ALLOWANCE: TAILORED FLOOR AND TASK LIGHTING

This Section Does Not Apply

N. ADDITIONAL LIGHTING ALLOWANCE: TAILORED ORNAMENTAL/SPECIAL EFFECTS

This Section Does Not Apply

O. ADDITIONAL LIGHTING ALLOWANCE: TAILORED VERY VALUABLE MERCHANDISE

This Section Does Not Apply

P. POWER ADJUSTMENT: LIGHTING CONTROL CREDIT (POWER ADJUSTMENT FACTOR (PAF))

This Section Does Not Apply

DOCUMENTATION AUTHOR'S DECLARATION STATEMENT

Documentation Author Name:	KEVIN PEZZONI	Documentation Author Signature:	
Company:	PEZZONI ENGINEERING, INC.	Signature Date:	10/26/2020
Address:	1150 9th Street #1415	CEA/ HERS Certification Identification (if applicable):	
City/State/Zip:	MODESTO, CA 95354	Phone:	209.554.4602

RESPONSIBLE PERSON'S DECLARATION STATEMENT
I certify the following under penalty of perjury, under the laws of the State of California:
1. The information provided on this Certificate of Compliance is true and correct.
2. I am eligible under Division 3 of the Business and Professions Code to accept responsibility for the building design or system design identified on this Certificate of Compliance (responsible designer)
3. The energy features and performance specifications, materials, components, and manufactured devices for the building design or system design identified on this Certificate of Compliance conform to the requirements of Title 24, Part 1 and Part 6 of the California Code of Regulations.
4. The building design features or system design features identified on this Certificate of Compliance are consistent with the information provided on other applicable compliance documents, worksheets, calculations, plans and specifications submitted to the enforcement agency for approval with this building permit application.
5. I will ensure that a completed signed copy of this Certificate of Compliance shall be made available with the building permit(s) issued for the building, and made available to the enforcement agency for all applicable inspections. I understand that a completed signed copy of this Certificate of Compliance is required to be included with the documentation the builder provides to the building owner at occupancy.

Responsible Designer Name:	KEVIN PEZZONI	Responsible Designer Signature:	
Company :	PEZZONI ENGINEERING, INC.	Date Signed:	10/26/2020
Address:	1150 9th Street #1415	License:	E16269
City/State/Zip:	MODESTO, CA 95354	Phone:	209.554.4602

LDA DESIGNERS & ARCHITECTS

Architect:
LDA Partners, LLP
Designers & Architects
222 Central Court
Stockton, CA 95204
209.943.0405
www.ldapartners.com

LICENSED ARCHITECT ERIC WILLIAM WOLFE C28388 September 2021 STATE OF CALIFORNIA

Client:
LATHROP-MANTECA FIRE PROTECTION DISTRICT
19001 SOMERSTON PARKWAY
LATHROP CA 95330
209.941.5102

Project:
LATHROP-MANTECA FIRE PROTECTION DISTRICT
800 J STREET
LATHROP CA 95330

REGISTERED PROFESSIONAL ENGINEER KEVIN L. PEZZONI NO. 16269 EXP. 12/20 ELECTRICAL STATE OF CALIFORNIA

PEZZONI ENGINEERING, INC.
CONSULTING ELECTRICAL ENGINEERS
1150 9TH Street Suite #1415 Modesto, CA 95354
PHONE: 209 .554 . 4602
HTTP://WWW.PEZZENGR.COM

PEZZONI ENGINEERING, INC. © Copyrighted 2020

Project No.: 20-481
Drawn By: C.C.M.
Checked By: K.P.

No.	Description	Date	By
1	CITY PLAN CHECK #1 1ST REVIEW CYCLE	10/21/2020	CCM
2	PLAN CHECK #2/ ADDENDA #1	12/09/2020	CCM

3RD SUBMITTAL -BLDG. DEPT.
12/02/2020

COMPLIANCE FORMS

E9.1

12/09/20 1:23:16 PM F:\20\481 LATHROP FIRE STATION #31\ENGR\SHEETS\481_E9.1 COMPLIANCE FORMS.DWG cmendez

STATE OF CALIFORNIA
Outdoor Lighting
NRCC-LTO-E (Created 4/19) — CALIFORNIA ENERGY COMMISSION

CERTIFICATE OF COMPLIANCE		NRCC-LTO-E
Project Name: FIRE STATION #31	Report Page:	Page 3 of 6
Project Address: 800 J STREET, LATHROP, CA 95330	Date Prepared:	10/26/2020

[1] *FOOTNOTES: Authority Having Jurisdiction may ask for Luminaire cut sheets to confirm wattage used for compliance per §130.0(c)*
[2] *For linear luminaires, wattage should be indicated as W/lf instead of Watts/luminaire. Total linear feet for the luminaire should be indicated in column 05 instead of number of luminaires.*
[3] *Select "New" for new luminaires in a new outdoor lighting project or for added luminaires in an alteration. Select "Altered" for replacement luminaires in an alteration. Select "Existing to Remain" for existing luminaires within the project scope that are not being altered and are remaining. Select "Existing Reinstalled" for existing luminaires which are being removed and reinstalled as part of the project scope*
[4] *Compliance with mandatory cutoff requirements is required for luminaires with initial lumen output ≥ 6,200 unless exempted by §130.2(b).*

G. CUTOFF REQUIREMENTS (BUG)

Table Instructions: Complete this table for fixtures of ≥ 6,200 initial luminaire lumens indicated on Table F as needing to comply with Cutoff Requirements. Maximum lumens can be found in Title 24, Part 11, Section 5.106.8.

01	02	03	04	05	06	07	08	09	10	11	12	
Name or Item Tag	Complete Luminaire Description	Backlight Rating[2]			Uplight Rating[2]			Glare Rating[2]			Field Inspector	
		Mounting Height from Property Line[1]	Max Allowable Backlight Rating[3]	Backlight Rating Per Design	Lighting Type	Max Allowable Backlight Rating[3]	Uplight Rating Per Design	Mounting Height from Property Line[1]	Max Allowable Glare Rating[3]	Glare Rating Per Design	Pass	Fail
G3	ARCH WALLP,	> 2 MH from property line	No Limit	1	Area Lighting	U0	0	> 2 MH from property line	G3	2	☐	☐

[1] *FOOTNOTES: Mounting Height is labeled MH in this table*
[2] *Authority having jurisdiction may ask for luminaire cut sheets or other documentation to confirm luminaire type, uplight ratings and glare ratings used for compliance per §130.2(b).*
[3] *BUG ratings with a lower number than the 'Max Allowable' are compliant. Ex. If Max Allowable is Bug Rating is B4, then B0, B1, B2, B3 and B4 are all compliant.*

H. OUTDOOR LIGHTING CONTROLS

Table Instructions: Complete this table demonstrating compliance with controls requirements for all new or altered luminaires installed as part of the permit application. For alteration projects, luminaires which are existing to remain (ie untouched) and luminaires which are removed and reinstalled (wiring only) do not need to be included in this table even if they are within the spaces covered by the permit application.
*When an option having a * is selected, the notes section of this table must be completed. The lighting controls section of the Compliance Summary Table on the first page will show "DOES NOT COMPLY" if the notes are left blank. For each requirement in columns 02 through 04, do not leave the field blank, instead select NA or Exempt* from the dropdown list to indicate not applicable or an exemption.*

Mandatory Controls

Table Continued

STATE OF CALIFORNIA
Outdoor Lighting
NRCC-LTO-E (Created 4/19) — CALIFORNIA ENERGY COMMISSION

CERTIFICATE OF COMPLIANCE		NRCC-LTO-E
Project Name: FIRE STATION #31	Report Page:	Page 2 of 6
Project Address: 800 J STREET, LATHROP, CA 95330	Date Prepared:	10/26/2020

D. EXCEPTIONAL CONDITIONS

This table is auto-filled with uneditable comments because of selections made or data entered in tables throughout the form.

Total Hardscape Area in Table A does not match the areas entered in Table I. Please review for compliance.

E. ADDITIONAL REMARKS

This table includes remarks made by the permit applicant to the Authority Having Jurisdiction.

F. OUTDOOR LIGHTING FIXTURE SCHEDULE

Table Instructions: For new or altered lighting systems demonstrating compliance with §140.7 (ie Table I has expanded for input), include all luminaires being installed and any existing luminaires remaining or being moved within the spaces covered by the permit application in the Table below. For altered lighting systems using the Existing Power method per §141.0(b)2I. (ie Table N has expanded for input), include only new luminaires being installed and replacement luminaires being installed as part of the project scope (ie, do not include existing luminaires remaining or existing luminaires being moved).

Designed Wattage:

01	02		03	04	05	06	07	08	09	10	
Name or Item Tag	Complete Luminaire Description		Watts per luminaire[1,2]	How Wattage is determined	Total number luminaires[2]	Luminaire Status[3]	Excluded per §140.7(a)	Design Watts	Cutoff Req. ≥ 6,200 initial lumen output §130.2(b)[4]	Field Inspector	
										Pass	Fail
G1	ARCH WALLPACK	☐ Linear	35	Mfr. Spec[1]	2	New	☐	70	NA: <6,200 lumens	☐	☐
G2	ARCH WALLPACK	☐ Linear	35	Mfr. Spec[1]	1	New	☐	35	NA: <6,200 lumens	☐	☐
G3	ARCH WALLPACK	☐ Linear	73	Mfr. Spec[1]	2	New	☐	146	Yes	☐	☐
H	SCONCE	☐ Linear	15	Mfr. Spec[1]	1	New	☐	15	NA: <6,200 lumens	☐	☐
J	CANOPY LT	☐ Linear	26	Mfr. Spec[1]	1	New	☐	26	NA: <6,200 lumens	☐	☐
K	SURFACE CYLINDER	☐ Linear	12.2	Mfr. Spec[1]	1	New	☐	12.2	NA: <6,200 lumens	☐	☐
						Total Designed Watts:		**304.2**			

* NOTES: Selections with a * require a note in the space below explaining how compliance is achieved.
EX: Luminaire is lighting a statue; EXCEPTION 2 to §130.2(b).

STATE OF CALIFORNIA
Outdoor Lighting
NRCC-LTO-E (Created 4/19) — CALIFORNIA ENERGY COMMISSION

CERTIFICATE OF COMPLIANCE		NRCC-LTO-E
Project Name: FIRE STATION #31	Report Page:	Page 1 of 6
Project Address: 800 J STREET, LATHROP, CA 95330	Date Prepared:	10/26/2020

This document is used to demonstrate compliance with requirements in §110.9, §130.0, §130.2, §140.7, and §141.0(b)2I. for outdoor lighting scopes using the prescriptive path.

A. GENERAL INFORMATION

01	Project Location (city)	LATHROP	04 Total Illuminated Hardscape Area (ft²)
02	Climate Zone	12	
03	Outdoor Lighting Zone per Title 24, Part 1 §10-114 or as designated by Authority Having Jurisdiction (AHJ):		

☐ LZ-0: Very Low - Undeveloped Parkland ☐ LZ-2: Moderate - Rural Areas ☐ LZ-4: High - Must be reviewed by CA Energy Commission for Approval
☐ LZ-1: Low - Developed Parkland ☑ LZ-3: Moderately High - Urban Areas

B. PROJECT SCOPE

Table Instructions: Include any outdoor lighting systems that are within the scope of the permit application and are demonstrating compliance using the prescriptive path outlined in §140.7 or §141.0(b)2I. for alterations.

My project consists of:

01	02
☑ New Lighting System	Must Comply with Allowances from §140.7.
☐ Altered Lighting System	Is your alteration increasing the connected lighting load (Watts)? ◯ Yes ◯ No
03	04 / 05
% of Existing Luminaires Being Altered[1]	Sum Total of Luminaires Being Added or Altered / Calculation Method

[1] FOOTNOTES: % of Existing Luminaires Being Altered = (Sum Total of Luminaires being Added or Altered / Existing Luminaires within the Scope of the Permit Application) x 100

C. COMPLIANCE RESULTS

Table Instructions: If any cell on this table says "DOES NOT COMPLY" or "COMPLIES with Exceptional Conditions" refer to Table D. for guidance.

Calculation of Total Allowed Lighting Power (Watts) §140.7 or §141.0(b)2L										Compliance Results		
01		02		03		04		05	06	07	08	09
General Hardscape Allowance §140.7(d)1	+	Per Application §140.7(d)2	+	Sales Frontage §140.7(d)2	+	Ornamental §140.7(d)2	+	Per Specific Area §140.7(d)2	OR Existing Power §141.0(b)2L =	Total Allowed (Watts)	≥	Total Actual (Watts)	07 Must be ≥ 08
(See Table I)		(See Table J)		(See Table K)		(See Table L)		(See Table M)	(See Table N)			(See Table F)	
350.275	+		+		+		+		OR =	350.275	≥	304.2	COMPLIES
										Cutoff Compliance (See Table G for Details)		COMPLIES	
										Controls Compliance (See Table H for Details)		COMPLIES	

STATE OF CALIFORNIA
Outdoor Lighting
NRCC-LTO-E (Created 4/19) — CALIFORNIA ENERGY COMMISSION

CERTIFICATE OF COMPLIANCE		NRCC-LTO-E
Project Name: FIRE STATION #31	Report Page:	Page 6 of 6
Project Address: 800 J STREET, LATHROP, CA 95330	Date Prepared:	10/26/2020

DOCUMENTATION AUTHOR'S DECLARATION STATEMENT

Documentation Author Name:	KEVIN PEZZONI	Documentation Author Signature:	
Company:	PEZZONI ENGINEERING, INC.	Signature Date:	10/26/2020
Address:	1150 9th Street #1415	CEA/ HERS Certification Identification (if applicable):	
City/State/Zip:	MODESTO, CA 95354	Phone:	209.554.4602

RESPONSIBLE PERSON'S DECLARATION STATEMENT

I certify the following under penalty of perjury, under the laws of the State of California:

1. **The information provided on this Certificate of Compliance is true and correct.**
2. **I am eligible under Division 3 of the Business and Professions Code to accept responsibility for the building design or system design identified on this Certificate of Compliance (responsible designer)**
3. **The energy features and performance specifications, materials, components, and manufactured devices for the building design or system design identified on this Certificate of Compliance conform to the requirements of Title 24, Part 1 and Part 6 of the California Code of Regulations.**
4. **The building design features or system design features identified on this Certificate of Compliance are consistent with the information provided on other applicable compliance documents, worksheets, calculations, plans and specifications submitted to the enforcement agency for approval with this building permit application.**
5. **I will ensure that a completed signed copy of this Certificate of Compliance shall be made available with the building permit(s) issued for the building, and made available to the enforcement agency for all applicable inspections. I understand that a completed signed copy of this Certificate of Compliance is required to be included with the documentation the builder provides to the building owner at occupancy.**

Responsible Designer Name:	KEVIN PEZZONI	Responsible Designer Signature:	
Company :	PEZZONI ENGINEERING, INC.	Date Signed:	10/26/2020
Address:	1150 9th Street #1415	License:	E16269
City/State/Zip:	MODESTO, CA 95354	Phone:	209.554.4602

STATE OF CALIFORNIA
Outdoor Lighting
NRCC-LTO-E (Created 4/19) — CALIFORNIA ENERGY COMMISSION

CERTIFICATE OF COMPLIANCE		NRCC-LTO-E
Project Name: FIRE STATION #31	Report Page:	Page 5 of 6
Project Address: 800 J STREET, LATHROP, CA 95330	Date Prepared:	10/26/2020

K. LIGHTING ALLOWANCE: SALES FRONTAGE

This Section Does Not Apply

L. LIGHTING ALLOWANCE: ORNAMENTAL

This Section Does Not Apply

M. LIGHTING ALLOWANCE: PER SPECIFIC AREA

This Section Does Not Apply

N. EXISTING CONDITIONS POWER ALLOWANCE (alterations only)

This Section Does Not Apply

O. DECLARATION OF REQUIRED CERTIFICATES OF INSTALLATION

Table Instructions: Selections have been made based on information provided in previous tables of this document. If any selection needs to be changed, please explain why in Table E. Additional Remarks. These documents must be provided to the building inspector during construction and can be found online at https://www.energy.ca.gov/title24/2019standards/2019_compliance_documents/Nonresidential_Documents/NRCI/

YES	NO	Form/Title	Field Inspector Pass	Field Inspector Fail
◉	◯	NRCI-LTO-01-E - Must be submitted for all buildings.	☐	☐
◉	◯	NRCI-LTO-02-E - Must be submitted for a lighting control system; or for an Energy Management Control System (EMCS), to be recognized for compliance.	☐	☐

P. DECLARATION OF REQUIRED CERTIFICATES OF ACCEPTANCE

Table Instructions: Selections have been made based on information provided in previous tables of this document. If any selection needs to be changed, please explain why in Table E. Additional Remarks. These documents must be provided to the building inspector during construction and must be completed through an Acceptance Test Technician Certification Provider (ATTCP). For more information visit: http://www.energy.ca.gov/title24/attcp/providers.html

YES	NO	Form/Title	Field Inspector Pass	Field Inspector Fail
◉	◯	NRCA-LTO-02-A - Must be submitted for all outdoor lighting controls except for alterations where controls area added to ≤ 20 luminaires.	☐	☐

STATE OF CALIFORNIA
Outdoor Lighting
NRCC-LTO-E (Created 4/19) — CALIFORNIA ENERGY COMMISSION

CERTIFICATE OF COMPLIANCE		NRCC-LTO-E
Project Name: FIRE STATION #31	Report Page:	Page 4 of 6
Project Address: 800 J STREET, LATHROP, CA 95330	Date Prepared:	10/26/2020

01	02	03	04	05	
Area Description	Shut-Off §130.2(c)1	Auto-Schedule §130.2(c)2	Motion Sensor §130.2(c)3	Field Inspector	
				Pass	Fail
TYPES G1/G2/G3/J	Photocontrol	Yes	Yes	☐	☐
TYPE H	Photocontrol		NA: Wall ≤ 24ft	☐	☐
TYPE J	Astronomical Timer	Yes	NA: Wall ≤ 24ft	☐	☐

*NOTES: Controls with a * require a note in the space below explaining how compliance is achieved.
EX: Not permitted by health & safety to be turned off; EXCEPTION 1 to §130.2(c).

I. LIGHTING POWER ALLOWANCE (per §140.7)

Table Instructions: Please complete this table for areas using the allowance calculations per §140.7. General Hardscape Allowance is per Table 140.7-A while "Use it or lost it" Allowances are per Table 140.7-B. Indicate which allowances are being used to expand sections for user input. Luminaires that qualify for one of the "Use it or lose it" allowances shall not qualify for another "Use it or lose it" allowance.

01					
	"Use it or lose it" Allowances (select all that apply)				
☑ General Hardscape Allowance	☐ Per Application	☐ Sales Frontage	☐ Ornamental	☐ Per Specific Area	
Table I (below)	Table J	Table K	Table L	Table M	

Calculated General Hardscape Lighting Power Allowance per Table 140.7-A (LZ 2 & 3)

02	03	04	05	06	07	08	09	10
Area Description	Surface Type	Area Wattage Allowance (AWA)			Linear Wattage Allowance (LWA)			Total General AWA + LWA (Watts)
		Illuminated Area (ft²)	Allowed Density (W/ft²)	Area Allowance (Watts)	Perimeter Length (lf)	Allowed Density (W/lf)	Linear Allowance (Watts)	
PAVED	Asphalt	1	0.025	0.025	1	0.25	0.25	0.275
							Initial Wattage Allowance for Entire Site (Watts):	**350**
							Total General Hardscape Allowance (Watts):	**350.275**

J. LIGHTING ALLOWANCE: PER APPLICATION

This Section Does Not Apply

LDA DESIGNERS & ARCHITECTS

Architect:
LDA Partners, LLP
Designers & Architects
222 Central Court
Stockton, CA 95204
209.943.0405
www.ldapartners.com

LICENSED ARCHITECT — ERIC WILLIAM MOORE — C28388 — September 2021 — STATE OF CALIFORNIA

Client:
LATHROP-MANTECA FIRE PROTECTION DISTRICT
19001 SOMERSTON PARKWAY
LATHROP CA 95330
209.941.5102

Project:
LATHROP-MANTECA FIRE PROTECTION DISTRICT
800 J STREET
LATHROP CA 95330

REGISTERED PROFESSIONAL ENGINEER — KEVIN L. PEZZONI — NO. 16269 — EXP. 12/20 — ELECTRICAL — STATE OF CALIFORNIA

PEZZONI ENGINEERING, INC.
CONSULTING ELECTRICAL ENGINEERS
1150 9TH Street Suite #1415 Modesto, CA 95354
PHONE: 209 . 554 . 4602
HTTP://WWW.PEZENGR.COM

PEZZONI ENGINEERING, INC. Copyrighted 2020

Project No.: 20-481
Drawn By: C.C.M.
Checked By: K.P.

No.	Description	Date	By
1	CITY PLAN CHECK #1 1ST REVIEW CYCLE	10/21/2020	CCM
2	PLAN CHECK #2/ ADDENDA #1	12/09/2020	CCM

3RD SUBMITTAL -BLDG. DEPT. 12/02/2020

COMPLAINCE FORMS

E9.2

12/09/20 1:23:17 PM F:\20\481 LATHROP FIRE STATION #31\ENGR\SHEETS\481_E9.1 COMPLIANCE FORMS.DWG cmendez